UNIVERSITY OF AMSTERDAM

UvA-DARE (Digital Academic Repository)

The impact of tax treaties and EU law on group taxation regimes

Farinha Aniceto da Silva, B.

Link to publication

Citation for published version (APA):
Farinha Aniceto da Silva, B. (2016). *The impact of tax treaties and EU law on group taxation regimes*.

General rights
It is not permitted to download or to forward/distribute the text or part of it without the consent of the author(s) and/or copyright holder(s), other than for strictly personal, individual use, unless the work is under an open content license (like Creative Commons).

Disclaimer/Complaints regulations
If you believe that digital publication of certain material infringes any of your rights or (privacy) interests, please let the Library know, stating your reasons. In case of a legitimate complaint, the Library will make the material inaccessible and/or remove it from the website. Please Ask the Library: https://uba.uva.nl/en/contact, or a letter to: Library of the University of Amsterdam, Secretariat, Singel 425, 1012 WP Amsterdam, The Netherlands. You will be contacted as soon as possible.

UvA-DARE is a service provided by the library of the University of Amsterdam (http://dare.uva.nl)

Download date: 09 júl 2020

Bruno Farinha Aniceto da Silva

The impact of tax treaties and EU law on group taxation regimes

Bruno Farinha Aniceto da Silva

The impact of tax treaties and EU law on group taxation regimes

The impact of tax treaties and EU law on group taxation regimes

ACADEMISCH PROEFSCHRIFT

ter verkrijging van de graad van doctor

aan de Universiteit van Amsterdam

op gezag van de Rector Magnificus

prof. dr. D.C. van den Boom

ten overstaan van een door het college voor promoties ingestelde

commissie, in het openbaar te verdedigen in de Agnietenkapel

op donderdag 25 februari 2016, te 12.00 uur

door

Bruno Farinha Aniceto da Silva

geboren te Lissabon, Portugal

Promotor

prof. dr. D.M. Weber	*Universiteit van Amsterdam*

Overige leden

prof. dr. A. Cordewener	*KU Leuven*
prof. mr. dr. S.C.W. Douma	*Universiteit Leiden*
prof. dr. J. Englisch	*Westfälische Wilhelms-Universität Münster*
prof. dr. O.C.R. Marres	*Universiteit van Amsterdam*
prof. dr. mr. H. Vermeulen	*Universiteit van Amsterdam*
prof. dr. P.J. Wattel	*Universiteit van Amsterdam*
prof. dr. J.L. van de Streek	*Universiteit van Amsterdam*

Faculteit Rechtsgeleerdheid

Table of contents

List of Abbreviations **xvi**

PART I Introduction

Chapter 1 Introduction **2**

1.1 Background to the research 2

1.2 Research question and scope 4

1.3 Structure and contents 5

PART II Relevance and Characterization of Tax Groups

Chapter 2 Definition and Nature of Corporate Groups **9**

2.1 Introductory remarks 9

2.2 Definition and nature of Groups 10

2.3 The approach to corporate groups: entity approach v enterprise approach 12

2.4 Interim conclusions 13

Chapter 3 Income Taxation of Corporate Groups **14**

3.1 Introduction 14

3.2 Principles of income taxation 14
3.2.1 Simplicity 14
3.2.2 Efficiency 15
3.2.3 Equity 15

3.3 Tax policy choices and the interaction of principles 16

3.4 Choices in the Group Structure 17
3.4.1 Non-tax considerations 18
3.4.2 Tax considerations 19

3.5 The influence of taxation and the relevance of group taxation regimes 21

3.6 Interim conclusions 23

Chapter 4 Reasons for the existence of Group Taxation Regimes 25

4.1 Introduction 25

4.2 Efficiency considerations 25
4.2.1 Neutrality 25
4.2.2 Avoidance of excessive taxation 26
4.2.3 Competitiveness 27

4.3 Equity considerations 28
4.3.1 Fairness 28
4.3.2 Prevention of tax avoidance 28
4.3.3 Non-discrimination 28

4.4 Simplicity considerations 29

4.5 Interim conclusions 29

Chapter 5 Relevance of Group Taxation Regimes and the "Global Market" 30

5.1 Introduction 30

5.2 The goals of the international tax system 30

5.3 The structure of the international tax system 32

5.4 The EU internal market 35

5.5 Interim conclusions 38

Chapter 6 Characterization and Requirements to Form a Tax Group 39

6.1 Introduction 39

6.2 Definition of groups from a tax perspective 39

6.3 Methods of group taxation recognition 40
6.3.1 Group contribution system 40
6.3.2 Group relief system 41
6.3.3 Consolidation 41

6.3.3.1 Partial consolidation 42
6.3.3.1.1 Pooling 42
6.3.3.1.2 Organschaft 42
6.3.3.2 Full consolidation 43
6.3.3.2.1 Pooling 43
6.3.3.2.2 Attribution 44
6.3.3.2.3 Absorption 44

6.4 Personal scope 45
6.4.1 Group perimeter 45
6.4.2 Eligible entities 46

6.5 Regime and members' election 49
6.5.1 Regime election 49
6.5.2 Members' election 49

6.6 Degree of income aggregation 50

6.7 Participation and control requirements 51

6.8 Substantive effects 54
6.8.1 The advantages 54
6.8.1.1 Use of losses 54
6.8.1.2 Intra-group transactions 56
6.8.1.2.1 Assets 56
6.8.1.2.2 Shares 58
6.8.1.2.3 Intra-group payments 59
6.8.1.3 Transfer pricing and anti-avoidance rules 59
6.8.1.4 Administrative burden 60

6.8.2 The disadvantages 60
6.8.2.1 Step down on tax group equity 60
6.8.2.2 Reset of cost base 60
6.8.2.3 Limitation on use of losses 61
6.8.2.4 Minimum life span 64
6.8.2.5 Tax liabilities 64
6.8.2.6 Administrative burden 65

6.9 Formalities/procedures 65

6.10 Interim conclusions 66

PART III Group Taxation and Tax Treaties

Chapter 7 Tax treaty provisions and group taxation 68

7.1 Introduction 68

7.2 Tax treaty provisions dealing with tax groups 69

7.3 Tax treaty provisions dealings with groups of companies 71

7.4 Group taxation regimes and tax treaty entitlement 76
7.4.1 Overview 76
7.4.2 Tax groups as persons 77
7.4.3 Group taxation and tax treaty residence 78
7.4.4 Dual resident companies and tax groups 83
7.4.5 Tax groups and income attribution 89
7.4.5.1 Income attribution and treaty entitlement 90
7.4.5.2 Cross-border group taxation and tax treaties 94

7.5 Interim conclusions 102

Chapter 8 The Non-discrimination provision: Analysis of Art. 24 of the OECD MTC 103

8.1 Introduction 103

8.2 The scope of Article 24: general remarks 105

8.3 The relation of the non-discrimination principle with other provisions of tax treaties 110

8.4 Tax policy underlying the non-discrimination principle 113

8.5 Analysis of the relevant paragraphs of Article 24 117
8.5.1 The nationality clause: Article 24 (1) 117
8.5.1.1 Subject of non-discrimination: nationals of one Contracting State 118
8.5.1.2 Object of comparison: same circumstances in particular with respect to residence 120
8.5.1.3 Discriminatory treatment: other or more burdensome taxation and connected requirements 124
8.5.1.4 Reason for discrimination: nationality 127

8.5.2 The PE clause: article 24 (3) 127
8.5.2.1 Relevance of Article 7 128
8.5.2.2 Requirements for application of Article 24 (3) 130

8.5.2.2.1 Subject of non-discrimination: permanent establishment of an enterprise of one Contracting State 130
8.5.2.2.2 Discriminatory treatment: Less favourable tax treatment 130
8.5.2.2.3 Object of comparison: enterprises of the other Contracting State carrying on the same activities 133
8.5.2.2.4 Reason for discrimination: carrying an activity through a PE in the other State 136

8.5.3 The deductibility clause: Article 24 (4) 136
8.5.3.1 Subject of non-discrimination: enterprise resident of one State 137
8.5.3.2 Discriminatory treatment: limitations on the deductibility for the purposes of determining its taxable profits 137
8.5.3.3 Exception to the discriminatory treatment: payments which are not at arm's length 138
8.5.3.4 Object of comparison: enterprises of the other State 141
8.5.3.5 Reason for discrimination: payments made to residents of the other State 141

8.5.4 The foreign ownership clause: article 24 (5) 141
8.5.4.1 Subject of non discrimination: foreign-controlled enterprises 143
8.5.4.2 Object of comparison: (other) similar enterprises 144
8.5.4.3 Discriminatory treatment: other or more burdensome taxation and connected requirements 148
8.5.4.4 Reason for discrimination: foreign ownership or control 148

8.6 Interim conclusions 150

Chapter 9 Non-discrimination in tax treaties and cross-border tax groups 152

9.1 Introduction 152

9.2 Article 24 (1): the nationality clause and its application to tax groups 152
9.2.1 Testing the nationality clause in tax group situations 152
9.2.1.1 Foreign parent with subsidiary in another State 153
9.2.1.2 Dual residence situations 154
9.2.1.3 Parent company with two subsidiaries ("sister companies") incorporated in one State but effectively managed in the same State of its sister company 156

9.3 Article 24 (3) and its application to tax groups 159
9.3.1 Testing the PE clause in tax group situations 161
9.3.1.1 Parent company with foreign PE 161
9.3.1.2 Parent company with foreign PE in the same State of the subsidiary 161

9.4 Article 24 (4) and its application to tax groups 164

9.5 Article 24 (5) and tax groups 165
9.5.1 Testing the foreign ownership clause in tax group situations 171

9.5.1.1 Cross-border tax groups 171
9.5.1.2 Dual residence situations 181
9.5.1.3 Parent company with subsidiary resident in the same State and with an intermediary foreign link 185
9.5.1.4 Foreign parent company with two subsidiaries (sister companies) in another State 187
9.5.1.5 Foreign parent company with two subsidiaries which in turn hold two sub-subsidiaries 196

9.6 Other benefits beyond income consolidation 197

9.7 Per-element or overall approach 199
9.7.1 Overall approach collides with the object and purpose of tax treaties 200
9.7.2 Per-element approach is possible in a tax treaty context 204

9.8 Interim conclusions 207

Chapter 10 Alternative or combined application of non-discrimination provisions and tax groups 209

10.1 Introduction 209

10.2 Interaction of non-discrimination provisions 210
10.2.1 Alternative application 210
10.2.2 Cumulative application in the same tax treaty 216
10.2.3 Cumulative application in different tax treaties 222

10.3 Interim conclusions 235

Chapter 11 Tax Treaties and EU Law 237

11.1 Introduction 237

11.2 Comparison between the non-discrimination in tax treaties and EU law 238
11.2.1 Similarities 239
11.2.2 Differences 243

11.3 Application of tax treaty provisions and EU law with particular reference to tax groups 258
11.3.1 The issue 258
11.3.2 Alternative application 258
11.3.2.1 Commerzbank 259
11.3.2.2 X AB and Y AB 261
11.3.2.3 Felixstowe Dock 262

11.3.3 Cumulative application 262
11.3.3.1 Halliburton 263
11.3.3.2 Other possibilities 265

11.4 Interim conclusions 266

PART IV Group Taxation and EU Law

Chapter 12 Group taxation and EU secondary law 268

12.1 Introduction 268

12.2 The Council Directives with effects on tax groups 268
12.2.1 The Parent-Subsidiary Directive 268
12.2.2 The Merger Directive 269
12.2.3 The Interest & Royalty Directive 270

12.3 The Commission Proposals 272
12.3.1 Draft Directive on cross-border loss relief 272
12.3.2 The CCCTB 274

12.4 Interim Conclusions 277

Chapter 13 General considerations on the interpretation of the fundamental freedoms 278

13.1 Introduction 278

13.2 National powers in direct taxation an their limits under the fundamental freedoms 279

13.3 Per-country v overall approach 282

13.4 Restrictions v discriminations in the field of direct taxation 286

13.5 The applicable fundamental freedom 293

13.6 Interim conclusions 299

Chapter 14 The relevant CJ case law regarding group taxation 301

14.1 Introduction 301

14.2 The case law 301
14.2.1 Foreign link companies 301
14.2.1.1 ICI Colmer 301
14.2.1.2 X AB & Y AB 303
14.2.1.3 Papillon 303
14.2.1.4 Felixstowe Docks 304
14.2.1.5 SCA Holding BV 306

14.2.2 Cross-border groups 308
14.2.2.1 X Holding 308
14.2.2.2 Groupe Steria 309
14.2.2.3 Finanzamt Linz 310

14.2.3 PE situations 311
14.2.3.1 Philips Electronics UK 311

14.2.4 Cross border losses 313
14.2.4.1 Futura Participations 313
14.2.4.2 AMID 314
14.2.4.3 Marks & Spencer Plc 315
14.2.4.4 Oy AA 317
14.2.4.5 Rewe Zentralfinanz 318
14.2.4.6 Deutsche Shell 319
14.2.4.7 Lidl Belgium 320
14.2.4.8 A Oy 321
14.2.4.9 Commission v UK 322
14.2.4.10 X AB 323

14.3 Interim conclusions 324

Chapter 15 Comparability and the existence of discrimination 327

15.1 Introduction 327

15.2 Comparability test: general remarks 328

15.3 Comparability test in group taxation 333

15.4 Group taxation and the choice of the right comparator: vertical or horizontal comparison 335
15.4.1 Vertical comparison 336
15.4.2 Horizontal comparison 342

15.5 Interim conclusions 351

Chapter 16 The Justifications 353

16.1 Introduction 354

16.2 Relevant Justifications 354
16.2.1 Effectiveness of fiscal supervision 354
16.2.2 Principle of territoriality 356
16.2.3 Coherence of tax system 360
16.2.4 Balanced allocation of taxing powers 367
16.2.4.1 Meaning of a newly introduced justification 367
16.2.4.2 Balanced allocation of the powers to tax and principle of territoriality 371
16.2.4.3 Balanced allocation of the powers to tax and coherence of the tax system 375
16.2.5 Tax Avoidance 381
16.2.6 Double use of losses 390

16.3 The use of combined justifications 395

16.4 Interim conclusions 408

Chapter 17 The proportionality test 411

17.1 Introduction 411

17.2 (Ir)relevance of cash-flow disadvantages 411

17.3 Cross-border losses and the "always somewhere approach" 427
17.3.1 The special case of currency losses: Deutsche Shell 435

17.4 Final losses and the no possibilities test 439
17.4.1 Meaning of final losses 441
17.4.2 Rules applicable to the calculation of the losses 454
17.4.3 Non-discriminatory tax rules 460

17.5 Application to different group taxation regimes 461

17.6 Group member entitled to the cross-border loss relief 468

17.7 Interim conclusions 472

Chapter 18 Per-element approach and per-element analysis 474

18.1 Introduction 474

18.2 Per-element v overall approach 474

18.3 Interim conclusions 487

Chapter 19 Per-element analysis: testing specific elements of group taxation regimes against the freedom of establishment 488

19.1 Introduction 488

19.2 Intra-group transfer of assets 488

19.3 Intra-group transfers: transfer pricing 494

19.4 Amortization of participations 497

19.5 Intra-group dividend distributions 499

19.6 Interest deduction limitations/thin cap rules 505

19.7 Intra-group transfer of services 507

19.8 Cross-border loss relief 509

19.9 Interim conclusions 509

Chapter 20 Other (possible) situations involving discriminatory treatment of tax groups 510

20.1 Introduction 510

20.2 Dual residence companies 510

20.3 Differences between domestic and existing cross-border group taxation regimes 515

20.3.1 Use of foreign losses 515

20.3.2 Limits on the inclusion of group members 516

20.3.3 Minimum life span 517

20.3.4 Optional or mandatory group perimeter 518

20.3.5 Depreciation of goodwill 520

20.4 Interim Conclusions 521

PART V Conclusions

Chapter 21 Conclusions **523**

Appendix **540**

Summary chart I on domestic group taxation regimes 540

Summary chart II on cross-border group taxation regimes 542

Summary **543**

Samenvatting **559**

Bibliography **580**

Table of Cases **625**

List of Abbreviations

Court or CJ
Court of Justice (in general and in references to cases as of 1 December 2009)

CCCTB
Common Consolidated Corporate Tax Base

DTT
Double Tax Treaty

ECJ
European Court of Justice (in references to cases dating before 1 December 2009)

EU
European Union

OECD
Organization for Economic Cooperation and Development

OECD MTC
OECD Model Tax Convention

PE
Permanent establishment

TFEU
Treaty on the Functioning of the European Union

VCLT
Vienna Convention on the Law of Treaties

Part I

Introduction

Chapter 1

Introduction

1. 1 Background to the research

In certain circumstances it is perfectly justified that a certain company, in order to better perform its activities, chooses to set up or to acquire another company rather than opting for the classic process of expansion through the creation of new departments or opening of branches. Within this context, it should be questioned whether is there any reason that justifies that the income of the corporate group – considered as being the most appropriate way for the development of the activity – should be taxed differently solely because the traditional structure of the income tax system considers the company individually.

Under a tax-neutral system, the choice of the taxpayer for a given organizational form is not influenced by tax issues because a business activity is taxed regardless of its organizational form as a single company or a corporate group. The rise of corporate groups in the last century has challenged the traditional separate entity doctrine not only from a corporate law perspective but also from a tax law perspective under which companies are treated as separate taxpayers. Many countries have faced the need to adopt special rules for the taxation of corporate groups, under which a corporate group is treated as one single entity. If the underlying concept for the taxation of a group is that one should not consider the income of each individual entity but rather the overall performance of the group, in other words, if a group of companies is considered from an economic perspective as the most adequate way to perform an activity, the tax system should not lead to distortions only because such activity was not performed by a single company but rather through a group of companies.

The Corporate Income Tax system has thus created a mechanism such to address these realities that groups may operating through different separate companies. The concept was to align economic reality with taxation. That mechanism as a form of tax integration[1] whereas a qualifying corporate group is allowed internally to integrate income, transfer assets and/other tax attributes as it was a sole taxable entity.

In that regard, it is not surprising that several Member States have adopted legislation regarding corporate tax groups. However, this was always with a limited scope and in particular, in most cases, it ranged to domestic situations and not to cross-border ones and

[1] Miguel Correia, *Taxation of Corporate Groups*, Wolters Kluwer (2013), p. 133

even if they did, the scope was limited. This became more acute considering that globalization, European integration and the openness of national economies were all contributing factors that led to multinational groups organizing their businesses on a global scale. There is an increasing number of multinationals which operate in multiple jurisdictions, which requires evolution in the tax treatment of groups of companies at an international level.

But the fact is, that the geographic mobility of businesses and the existence of corporate groups on a global scale has not been followed, in the vast majority of the cases, by the development of the Corporate Income Tax System at an international level. Therefore, multinational groups are often confronted with disparities and obstacles.[2]

Disparities are differences arising from the interaction of different tax systems. The States differ regarding the rules that constitute their tax systems. Each tax system operates on the basis of different conditions and rules may differ among States. Therefore, multinational groups are confronted with possible situations of double taxation arising from the overlap of tax claims or may explore tax gaps by exploring those differences between tax systems.

Obstacles are distortions created by certain States in their own domestic legislation and arise due to the difference in treatment between domestic and cross-border situations. The fact that a corporate group may not benefit from a tax group regime at an international level constitutes an obstacle at an international level. It derives from a decision to treat domestic and cross-border groups differently and ultimately affects the location decision of businesses as well as the form in which to carry out those businesses. In fact, when a group taxation regime is confined to a purely domestic scenario or introduces differences between domestic and cross-border situations, that tax regime plays a role in a taxpayer's choice prompted by a difference in treatment in a similar economic reality: to perform an economic activity as a single entity or through a group of separate entities. At the same time, it affects the efficient allocation of resources, given that by not extending the group taxation benefits to cross-border situations, it may potentially discourage taxpayers to organize their activities in a similar fashion as they would otherwise do in a pure domestic scenario.

Taxpayers operating their business activities domestically should not find themselves in different circumstances considering legal differences, particularly where they do not match economic reality. This unequal treatment leads to the adoption of other forms of investment which, as a rule, are not the most efficient from an economic perspective.

[2] Maarten de Wilde, "'Sharing the Pie': Taxing Multinationals in a Global Market", 43 *Intertax*, 6/7, Kluwer Law International (2015), p. 438.

The existing obstacles has led taxpayers to challenge the domestic legislation that did not provide the possibility to have access to group taxation benefits at a cross-border level or if they were available only to a limited extent. Those cases were primarily referred to the CJ for a preliminary ruling on possible domestic restrictions caused by national legislation on group taxation. Since the landmark judgment in the *Marks & Spencer* case,[3] the reasoning adopted by the Court has been debated by academics, criticized by Advocate Generals and has been a source of uncertainty for taxpayers, tax authorities, courts and legislatures.[4] At the same time, and probably due to the growing perception of the non-discrimination standard as a tool to challenge domestic legislation, a few cases have emerged which challenge group taxation regimes based on the tax treaty non-discrimination provision.

1.2 - Research question and scope

The proposed research question is how do tax treaties and EU law influence group taxation regimes? In concrete terms, this analysis assesses how tax treaties and EU law may contribute to remove the obstacles to group taxation regimes, meaning the differences created by domestic legislations between domestic and cross-border groups. This assessment is fundamentally based on the interpretation of the non-discrimination provisions in tax treaties as well as the EU fundamental freedoms.

The topic chosen and the proposed approach are justified by three reasons.

First, group taxation, tax treaties and EU law share a common feature: they are driven by the concept of neutrality.
The purpose of group taxation regimes is to assimilate a group of companies as a single taxpayer for tax purposes. Therefore, the tax system should not exercise any influence over a taxpayer's choice to develop its activity within the same entity or through separate independent entities. Ideally, the decisions should be made based on optimal economic choices and not influenced by the tax treatment which then equates multiple entities within a group to a single entity. The tax system aligns the tax treatment of a group of companies with the economic reality irrespective of the structure of the business.
Similarly, tax treaties also share a concept of neutrality. Tax treaties allocate taxing rights between Contracting States. Such existing system of allocation of taxing rights is linked to the concept of neutrality.[5] Tax treaties intend to promote cross-border trade by removing tax obstacles and therefore promote an optimal location of resources that minimizes distortions caused by the tax system. This is complemented by the inclusion of a non-discrimination provision which, to a certain extent, is also driven by a concept of neutrality.

---

[3] ECJ 13 December 2005, C-446/03 *Marks & Spencer plc v David Halsey (Her Majesty's Inspector of Taxes)*.
[4] Axel Cordewener, Cross-border Compensation of 'Final Losses' for Tax Purposes – The Drama Continues…", 22 *Maastricht Journal of European and Comparative Law* 3 (2015), p. 418.
[5] Lang, Michael & Owens, Jeffrey *The Role of Tax Treaties in Facilitating Development and Protecting the Tax Base*, WU International Taxation Research Paper Series No. 2014 – 03, p. 34.

As regards EU law, the idea of internal market is also driven by neutrality, as it aims at an area without internal frontiers favouring an efficient allocation of resources. Tax measures that create obstacles discourage or dissuade cross-border investments and therefore affect the efficiency standard of undistorted decision-making are inherent to an Internal Market. Therefore, the objective of the Internal Market prevents Member States from enacting domestic legislation that creates obstacles to cross-border trade. The concept of neutrality and the efficient allocation of resources is in the legal DNA[6] of the Internal Market.

Second, as stated above, the CJ approach to group taxation regimes and the reasoning adopted has been subject to debate and has constituted a source of uncertainty. Therefore, it is relevant to perform an assessment of the CJ's case law, explaining its rationale and pointing out its consistencies and inconsistencies. Similarly, it is relevant to make an interpretation of tax treaties and in particular, the scope of the non-discrimination article. The approach based on non-discrimination in tax treaties and EU law is further justified considering the fact that tax groups are a reaction to form of discrimination: this between businesses being carried on in a number of related companies rather than in a single company.

Finally, it is also relevant to consider to what extent it is possible to develop new approaches based on the interpretation of tax treaties and EU law such to extend the application of group taxation regimes to cross-border situations.

1.3 Structure and Contents

Part I provides the background for this research describing the relevance of the topic and the approach adopted for the research.

Part II addresses the question of the relevance and characterization of tax groups. This Part starts by providing a definition of corporate group for legal purposes. An analysis is then made of the principles that govern a tax system from a policy perspective and their relevance for corporate groups. In this regard, I will demonstrate how the taxes in general can affect the behaviour of taxpayers and the consequences that arise therefrom as well as the relevance of group taxation regimes to avoid those undesirable consequences. This is followed by a description of what are the reasons for corporate tax groups to exist enhancing the relevance in the conception of a tax system. A justification will be given that the importance of group taxation regimes and their existence is relevant, not only from a purely domestic perspective but also from an international and, in particular, from an EU perspective, which has an economic rationale underlying in its creation considering the aims of the EU internal market.

[6] Wolfgang Schön, "Neutrality and Territoriality – Competing or Converging Concepts in European Tax Law?", 69 *Bulletin for International Taxation* 4/5 IBFD (2015), p. 272.

The last chapter is dedicated to an analysis of the different tax group regimes adopted by different countries. A reference will be made to the different models that can be found, with a description of their advantages and disadvantages. It is followed by an examination of the characteristics of tax groups (scope, qualifying entities, participation/controlling requirements substantial effects, formalities and procedures). It should in all events be stressed that the purpose of this scrutiny is not to perform a comparative study of all the existing group taxation regimes, but rather to perform a more general analysis of the features of tax group regimes in general. Accordingly, where specific references to countries have been made, this is either to enhance a particularity of its tax group regime or otherwise have a mere exemplificative character and does not, in any way, mean to be exhaustive.

Part III analyses the interrelations between group taxation and tax treaties. It starts with a more general description of how tax treaties address groups of companies in general. This is followed by an analysis of the influence of group taxation on tax treaties. This implies two issues. First, to analyse whether tax treaty provisions might affect the computation of the income of the group, given that group taxation rules allow the aggregation of the income of its group members. Second, to analyse whether tax treaties might affect the personal scope of tax groups, that is, if they might change the configuration of a group by extending its application to group members which otherwise would not (according to the applicable domestic law) be part of a tax group.

That leads to the main focus of this Part: the non-discrimination provision of Article 24 of the OECD Model Tax Convention. It starts by addressing the principles of interpretation of tax treaties and focuses, in particular, on the non-discrimination. An analysis will then be made of the policy and scope of the non-discrimination principle in tax treaties. I will deal with the specific requirements that trigger the application of each one of its clauses. This analysis is followed by testing whether and how the relevant non-discrimination clauses may apply to different group taxation situations and whether they are relevant to extend the personal scope of tax groups to situations which are not recognized as such under the domestic legislation. This analysis considers concrete examples as well as relevant case law.

Subsequently, I will examine how the non-discrimination clauses in tax treaties can interact with each other, in particular, by their combined application in order to extend the application of tax groups. Here, consideration is given to the combined application of different non-discrimination clauses of the same tax treaties as well as of different tax treaties with the claim being made by the same or multiple taxpayers.
The final Chapter is dedicated to an analysis of the interaction of tax treaty non-discrimination and EU law. It starts with an analysis of the different standards or protection and interpretation of the two sets of norms. This is followed by an analysis of how EU law is a source of influence for the interpretation of tax treaty non-discrimination. Lastly, I will

analyse the possibilities of interaction of non-discrimination in tax treaties and EU law and how it may be possible to combine the effects of these two sets of norms.

Part IV scrutinizes the impact of EU law in group taxation regimes. EU law has had a significant impact over the domestic tax rules of Member States. Such impact is the result of both the application of the EU secondary law, as well as the judgments of the Court of Justice of the European Union ("CJ") aimed at eliminating the existing barriers to the fundamental freedoms. This is true for tax rules in general and consequently, for provisions affecting groups of companies.

In this regard, I will start by analysing the existing secondary law which is relevant for tax groups within the EU as well as legislative initiatives which have impact on those groups. Subsequently, I analyse the impact of primary law, that is, the interpretation of the fundamental freedoms in cases which directly or indirectly have significance in the field of group taxation. For that purpose, this Part starts by giving some general considerations on the interpretation of the fundamental freedoms and their application in the specific context of tax groups. An introduction is then given to the relevant case law regarding group taxation. Subsequently, an analysis is developed as to the three-step approach followed by the CJ with particular reference to group taxation case law, that is, the comparability, justifications and proportionality tests. It is then examined whether it is possible to make a per-element approach analysis as to the different benefits of group taxation regimes and how each particular benefit can be tested against the fundamental freedoms considering the case law developed by the CJ.

Finally, and considering that even the Member States that provide for a cross-border group taxation regime stipulate differences or have enacted regimes parallel to the domestic ones, an assessment against the fundamental freedoms is made on the compatibility of the existing cross-border group taxation regimes vis-à-vis domestic ones.

Part V provides the conclusions of the analysis developed throughout this thesis.

Part II

Relevance and Characterization of Tax Groups

Chapter 2

Definition of Groups

2.1 Introductory remarks

The setting up of a group is related to the development of a company's business, either because it wants to diversify or expand its activity or because it aims at establishing itself in another market. One of the first issues to consider is the choice of the type of entity: a subsidiary, which a separate entity both for legal and tax purposes, a branch or any other simple part of the company carrying the business. The related taxation depending on the choice of the entity does not always reflect the economic reality of treating a group of several entities as a single unit. The absence of considering those different entities as a group can lead to double taxation and affect the economic choices of market players. In addition, the blurring lines of independence can pose challenges from a tax perspective in assessing the status of transactions conducted within a group.

Economic tax theory considers that economic choices should be neutral in the sense that they should not be affected by taxation. From a group taxation perspective, neutrality requires that decisions regarding, for example, the geographical distribution of entities or the organization of the group should not be influenced by taxation. Tax neutrality is achieved when a company doing business by way of divisions (single company) has the same tax burden as a company undertaking a similar activity by way of subsidiaries (a corporate group). Under a tax-neutral system, the choice of the taxpayer for a given organizational form is not influenced by tax issues because a business activity is taxed regardless of its organizational form as a single company or corporate group.

Based on these concerns, the rise of corporate groups in the last century has challenged the traditional separate entity doctrine under which companies are treated as separate taxpayers.[7] In that regard, many countries have faced the need to adopt special rules for the taxation of corporate groups, under which a corporate group is treated as one single entity. In fact, if the underlying concept for the taxation of a group is that one should not consider the income of each individual entity but rather the overall performance of the group, some special rules are necessary to such effect. The tax approach to corporate groups requires considering a solution which, not disregarding the judicial structure – autonomy of each of the companies of the group – has as a main concern to avoid the creation of any type of obstacle to the group's functioning. Those obstacles are mainly due to the traditional schemes of individualized taxation of companies that lead to multiple taxation of the same income. In that regard, solutions were essentially aimed at searching for neutrality

[7] See H. Ault and B. Arnold, *Comparative Income Taxation: A Structural Analysis,* 2nd edition (The Hague: Kluwer Law International), 2004, p. 320.

regarding the different forms of companies' organization, that is, regimes that permit the similar taxation of corporate groups and single companies. This has led to the recognition by the tax law of several countries of the existence of groups as an economic and fiscal unity providing for alternatives in the field of taxation of profits which, although most of the time with a partial or limited scope, are based on the concept that the group's ability to pay is better reflected through the taxation of the consolidated profits of its companies.

It is possible to find several tax systems around the world that have adopted group taxation rules that depart from the basic principle of distinguishing the several entities which are part of the group. However, it is also possible to infer that there are different approaches among countries about the concept of a corporate tax group. In that regard, there are differences not only in the model or system of corporate tax groups adopted (e.g. group relief, group contribution, consolidation, etc.) but also about the scope and definition of a qualifying group.[8]

2.2 Definition and nature of Groups

Corporate groups constitute an extremely complex and multidisciplinary reality. In that regard, the definition of a corporate group for tax purposes requires, as a preliminary stage, to determine the meaning that law in general and company law, in particular, provides for such reality. The concept of groups of companies presumes various legal entities (typically companies or permanent establishments) that are subject to a single group's business strategy. In a first analysis, it is possible to state that a group is no more than a certain type of corporate organization and structure which allows the member companies to develop their activities and achieve their purposes in the way which is considered to more suitable. It is therefore a solution which, with regard to the structure in which those companies are organized, corresponds with the most efficient way to face the needs that such companies have to be able to better perform their activities.

Corporate groups, therefore, arose from a natural and necessary development of companies regarding the performance of their activities. The existence of corporate groups is related to the development of economies on a national and international perspective that requires new forms of organization.[9]

The group structure which, as a rule, is composed of different entities with legal personality, allows the limitation of risk connected with new projects and permits that some of those entities may be located in different jurisdictions allowing the internationalization of their activities, giving rise to what are commonly known as *multinational companies*.

---

[8] See Dieter Endres, "The Concept of Group Taxation: A Global Overview", 31 *Intertax*, Vol. 10, (2003), p. 349.

[9] See Phillip I. Blumberg, "The Transformation of Modern Corporation Law: The Law of Corporate Groups", 3 *Connecticut Law Review* 37 (2005), pp. 605-617.

Corporate groups constitute an evolution of the structure of companies and a valid alternative for the traditional development of the business structured in one single entity. Therefore, they are frequently considered as a form of *plural concentration* as opposed to the *unitary concentration* which is typical of mergers and which has been the most frequent process which has allowed the development of companies. The differentiation comes from the fact that rather than a single company structure, the different parts of the unitary business are allocated to a group of affiliated companies (subsidiaries). In that regard, they constitute a new form of organization where a plurality of separate legal entities is submitted to a unitary highly integrated economic direction, also referred to as the *polycorporate enterprise*[10] as opposed to the *single corporate enterprise*.

Groups of companies can thus be defined[11] as a number of companies which, maintaining their own and separate legal personality, are associated by common or interrelated shareholdings to the extent sufficient to confer effective control[12] and subject to a common management.[13] The companies which are part of the group become subject to the coordination of the parent company and their interests, therefore, are the ones which are established by that parent company.

As a consequence of the existence of corporate control,[14] group members are subject to a common business policy.[15] This common business policy submits group members to a global business strategy whereby assets, profits and personnel are transferred to those affiliates where the return on capital is highest. Such allocation occurs either in a domestic or in a cross-border scenario.[16] The efficient allocation of the overall group resources to

---

[10] See José Engrácia Antunes, "The Liability of Polycorporate Enterprises", *Connecticut Journal of International Law* 10 (1999), pp. 207-208.

[11] See Virginia E. Harper Ho, "Theories of Corporate Groups: Corporate Identity Reconceived", *University of Kansas School of Law Working Paper* no. 2011-3, pp. 11-15.

[12] See Detley F. Vagts, "The Multinational Enterprise: A New Challenge for Transnational Law", *Harvard Law Review* 83 (1969), p. 712.

[13] In this regard, the Australian High Court in case *Walker v Wimborne* (1976) 3 ACLR stated that:

> "The word "group" is generally applied to a number of companies which are associated by common or interlocking shareholdings, allied to unified control or capacity to control".

[14] The existence of corporate control has been defined as the vital link or essence without which several companies will not constitute a corporate group. See Phillip I. Blumberg, "The Corporate Entity in an Era of Multinational Corporations", 15 *Delaware Journal of Corporate Law* 2 (1990), pp. 329-331. In fact and without control, the relationship between a company and the entity whose shares it owns resembles a pure investment. See also Virginia E. Harper Ho, "Theories of Corporate Groups: Corporate Identity Reconceived", *University of Kansas School of Law Working Paper* no. 2011-3, p. 14.

[15] See José Engrácia Antunes, "The Liability of Polycorporate Enterprises", *Connecticut Journal of International Law* 10 (1999), pp. 208-213.

[16] See Detley F. Vagts, "The Multinational Enterprise: A New Challenge for Transnational Law", *Harvard Law Review* 83 (1969), p. 756.

those members that can earn the highest rate of return allowing the group to maximize its overall profitability[17] as its resources are always put to their highest economic use.

The fact that the different group members are orientated by a common business policy motivated by an overall profit maximization dictates that the location of group resources is guided by efficiency standards. For that purpose, a considerable degree of flexibility within a group is necessary in order to allow a transferability of assets and income between group members to ensure that the group's resources are put to their highest economic use, contributing to the profit maximization.

2.3 The Approach to Corporate Groups: *Entity Approach* v *Enterprise Approach*

Traditionally it is assumed that the model of an individual autonomous entity corresponds to a company.[18] The particular nature of corporate groups raises the issue of whether the traditional model of looking at each company separately should be re-considered as it is merely formal and pays little attention to its economic reality.[19]

A new model considers the whole business reality following a functional rather than formal approach. The *enterprise approach*[20] rejects the traditional perspective of looking at each company of the group as a separate entity, such as is performed in the *entity approach*. The starting point of the enterprise approach is thus the actual operating business enterprise rather than the formal legal structure. If the legal entities are under common control and economically integrated, then all the entities that belong to the group should be considered together as one enterprise. This because the legally separate subsidiaries are in fact part of a larger economic enterprise controlled by a parent company. The enterprise approach relies also on the distinction that parent company shareholders are different from investor shareholders. The investor shareholders own the parent company and the parent company in turn owns the shares of the subsidiaries. In this regard, the whole group of companies (both parent and subsidiaries) in reality is one business enterprise.

When dealing with cross-border corporate groups, the adoption of the enterprise approach poses a further challenge on how to implement it. There are two possible ways[21]: one possibility is extraterritoriality, in which a single country applies its legislation to the entire

---

[17] See Detley F. Vagts, "The Multinational Enterprise: A New Challenge for Transnational Law", *Harvard Law Review* 83 (1969), pp. 755-756.

[18] See José Engrácia Antunes, *Liability of Corporate Groups: autonomy and control in parent-subsidiary relationships in US, German and EU law: an international and comparative perspective* (1994), pp. 13-20.

[19] See Kurt A. Strasser and Philip I. Blumberg, "Legal Models and Business Realities of Enterprise Groups – Mismatch and Change", *Osgoode Hall Law School CLPE Research Paper* 18/2009, Vol. 5, no. 3 (2009), p. 4

[20] See Philip I. Blumberg, *The Multinational Challenge to Corporation Law: The Search for a New Corporate Personality* (1993), p. 63 or Phillip I. Blumberg, "The Increasing Recognition of Enterprise Principles in Determining Parent and Subsidiary Corporation Liabilities", *Connecticut Law Review* 28 (1995), p. 296.

[21] Reuven S. Avi-Yonah, "National Regulation of Multinational Enterprises: An Essay on Comity, Extraterritoriality and Harmonization", 42 *Columbia Journal of Transnational Law* 5, pp. 9-10.

group. The other possibility is harmonization in which the various countries in which the group operates agree on a single harmonized set of rules to govern such group.

It should be stressed that the enterprise approach is not to be applied indiscriminately. It requires a test:[22] to look at the rules and policies of the specific area of law[23] involved to determine whether legal decision-making should consider the whole business enterprise or rather follow the traditional entity approach. It will be analyzed and demonstrated throughout the next chapters that tax law is one of the areas that requires following an enterprise approach in regard to the treatment of corporate groups. And that it is conceptually applicable not only domestically but also to cross-border corporate structures.

2.4 Interim conclusions

The setting up of a group is related to the development of a company's business either because it wants to diversify or expand its activity or because it aims at establishing itself in another market. Groups of companies have particular features and dynamics as they comprise a group of entities which, although they maintain their legal independence and individualization, are subject a common business strategy. This strategy is guided by all group members making their contribution to achieve profit maximization. And that requires all resources to be allocated such to achieve the highest degree of efficiency.

Corporate groups give rise to a new model that considers the whole business instead of looking at each company separately. This model follows a functional rather than a formal approach. If the legal entities are under common control and economically integrated, then all those entities that belong to the group should be considered together as one enterprise regardless of the formal legal structures.

[22] See Kurt A. Strasser and Philip I. Blumberg, "Legal Models and Business Realities of Enterprise Groups – Mismatch and Change", *Osgoode Hall Law School CLPE Research Paper* 18/2009, Vol. 5, no. 3 (2009), p. 5-23.

[23] See Reuven S. Avi-Yonah, "National Regulation of Multinational Enterprises: An Essay on Comity, Extraterritoriality and Harmonization", 42 *Columbia Journal of Transnational Law* 5, (2003) pp. 5-34. Avi-Yonah identifies the following areas in which an entity approach should be followed: contracts and torts. For other areas such as securities regulation, environmental law, antitrust, bankruptcy, tax, child labour, etc., suggests to follow an enterprise approach.

Chapter 3

Income Taxation of Corporate Groups

3.1 Introduction

The specific nature of corporate groups raises challenges to the tax system. In order to place properly the tax issues that arise involving corporate groups and the relevance of their recognition for tax purposes, it is first necessary to identify the structural principles of a tax system. The discussions about the principles that characterize a tax system rely on the old maxims[24] identified by Adam Smith.[25] If it is true that those maxims have already existed for more than two centuries, the fact is that they still remain valid. Later economists have refined and even added new criteria but the fact is that the basic premises remain the same.[26] The most frequent principles underling the levies of taxes are:[27] (i) simplicity, (ii) efficiency, and (iii) equity.

3.2. Principles of income taxation

3.2.1 Simplicity

The principle of simplicity is an obvious and very much claimed principle in the design and implementation of tax policy. It requires a triple standard[28] in its application.
The first standard is *policy simplicity* and it regards the design of the tax and the definition of its incidence.
The second standard is *form simplicity* and it is expressed by the clarity of the tax statutes in order to be correctly understood by all the tax actors. It is related to certainty in tax law as

[24] A distinction should be made between the policy objectives of a tax system and the role of taxes. The functions of taxes are essentially three: (i) raise revenue; (ii) a redistributive function; and (iii) regulatory component. See in this regard, Reuven Avi-Yonah, "The Three Goals of Taxation", 60 *Tax Law Review*, (2006/2007), pp. 1-28.
[25] See Adam Smith, *An Inquiry into the Nature and Causes of the Wealth Of Nations*, Book V, Chapter II, Part II, (1776), available at: http://www.gutenberg.org/files/3300/3300-h/3300-h.htm#link2HCH0031.
[26] See Willem Vermeend, Rick van der Ploeg and Jam Willem Timmer, *Taxes and the Economy – A Survey of the Impact of Taxes on Growth, Employment, Investment, Consumption and the Environment*, Edward Elgar (2008), pp. 59-60.
[27] See Peter A. Harris, *Corporate Shareholder/Income Taxation and Allocating Taxing Rights between Countries*, IBFD (1997), pp. 6-26, H. David Rosenbloom, "From the Bottom Up: Taxing The Income of Reign Controlled Corporations", 26 *Brooklyn Journal of International Law,* (2000), pp. 1526-1530 or Otto H. Jacobs, et al. "ICT and International Corporate Taxation: Tax Attributes and Scope of Taxation", 31 *Intertax* 6/7 (2003), pp. 217-222.
[28] See Peter A. Harris, *Corporate Shareholder/Income Taxation and Allocating Taxing Rights between Countries*, IBFD (1997), pp. 8-10.

a tax should be defined in a way that is generally accepted by the community including that there are no loopholes or hidden privileges.
Finally, the third standard is *action simplicity* and it regards the simplicity in compliance and administration of the tax. The underlying concept is that costs of administration and enforcement to either governments or taxpayers are not productive costs and, in that sense, they should be kept to the minimum possible. This latter standard of simplicity has direct relation to one of the types of efficiency identified below: a tax that is simple in the administration and compliance will allow reducing the resources spent in its application.

3.2.2 Efficiency

The standard of efficiency is analyzed from two different angles.[29]
One involves minimizing the amount of resources spent in applying the tax system (for example compliance costs, administration and also tax planning). It aims at ensuring that both the administration costs incurred by a government to collect revenue as well as the compliance costs incurred in order to meet tax obligations are minimal to the extent possible. It also intends to reduce incentives for tax planning.
The other involves minimizing substitution effects or changes in taxpayer decisions or behaviour due to the tax system. The starting point is that market allocations of resources, as determined by pre-tax profitability, are optimal. Therefore, the distribution of production factors should take place on the basis of market mechanisms with or without minimum public interference. From the tax policy perspective, this means that taxation should follow business decisions and not determine them in any (positive or negative) way.[30] Taxation should follow the economic operator and its business in the sense that it does not affect its choices. In other words, it shall promote neutrality.[31] A tax system is efficient if it minimizes substitution effects by being neutral at key decisional boundaries and thereby giving taxpayers no reason to change their decisions or behaviour.[32]

3.2.3 Equity of the tax system

Equity has been one of the traditional standards applied by tax theorists to structure a tax system[33]and it is also referred as fairness.[34] The traditional criterion for defining equity[35]

---

[29] See Daniel N. Shaviro, "Selective Limitations on Tax Benefits", 56 *University of Chicago Law Review*, (1989), pp. 1223-1230.
[30] See, *inter alia*, Klaus Vogel, "Worldwide vs. source taxation of income – A review and re-evaluation of arguments (Part II)", *Intertax* 10 (1988), p. 310, Maarten F. Wilde, "A Step Towards a Fair Corporate Taxation of Groups in the Emerging Global Market", 39 *Intertax* 2, p. 64.
[31] See David. A Weisbach, "Line Drawing, Doctrine, and Efficiency in the Tax Law", 84 *Cornell Law Review*, (1998-1999), pp. 1651-1652.
[32] See Daniel N. Shaviro "An Efficiency Analysis of Realization and Recognition Rules under Federal Income Tax", 48 *Tax Law Review*, 1 (1992), p. 56.
[33] See *inter alia*, Boris I. Bittker, "Equity, Efficiency, and Income Tax Theory: Do Misallocations Drive out Inequities?" 16 *San Diego Law Review*, (1979), pp. 735-748, Klaus Vogel "Worldwide vs. source taxation of income – A review and re-evaluation of arguments (Part III)", *Intertax* 11 (1988), pp. 393-399 and J. Clifton

invokes two concepts:[36] horizontal equity and vertical equity. The first one requires equal to receive the equal treatment. The second one requires that a different treatment is provided for people in different circumstances, meaning that an appropriate distinction should be made in the treatment of people who are alike. The relevance of the principle of equality in a tax system can be summarized by the fact that: (i) it promotes neutrality and in that regard it is also relevant for achieving efficiency regarding resource allocation; (ii) it reaffirms the generality and equality of taxpayers' contributions; and (iii) from the perspective of obtaining revenue, it prevents tax arbitrage.[37]

3.3 Tax Policy Choices and the Interaction of Principles

If it is widely accepted that the above principles of simplicity, efficiency and equity are the ideal ones of a tax system, it is also true that these principles frequently collide with one another.[38] In fact, rules that are fair in the sense that they acknowledge the particularities of each taxpayer are not easily administrable. A transparent provision may not be the most efficient one. This requires each of these principles to be weighed against each other in the decision-making process. In that weighing, the goals of efficiency and equity have usually taken more relevance than simplicity, although simplicity must not be disregarded. The prevalence of equity and efficiency over simplicity is understandable and somewhat justified. For equity and efficiency, the main concern is to analyze how tax should be allocated among taxpayers and States. The principle of simplicity plays a different role in the sense that it has a more practical nature as to how tax can be allocated. As a matter of definition, simplicity convenience may not constitute a policy goal at all.[39]

Fleming Jr., Robert J. Peroni and Stephen E. Shay, "Fairness in International Taxation: The Ability-to-Pay Case for Taxing Worldwide Income, 5 *Florida Tax Review* 4, (2001), pp. 299-354.

[34] See, *inter alia*, Daniel N. Shaviro "Selective Limitations on Tax Benefits", 56 *The University of Chicago Law Review* (1989), pp. 1220-1222.

[35] Frequently, equality is also linked to the benefits received from the government, which is known as the benefit theory. See on this Lawrence Lokken, "The Sources of Income from International Uses and Dispositions of Intellectual Property", 36 *Tax Law Review* (1981), pp. 238-239 or J. Clifton Fleming Jr., Robert J. Peroni and Stephen E. Shay, "Fairness in International Taxation: The Ability-to-Pay Case for Taxing Worldwide Income, 5 *Florida Tax Review* 4, (2001), pp. 333-334.

[36] See, *inter alia*, Louis Kaplow, "Horizontal Equity: Measures in Search of a Principle, 42 *National Tax Journal*, (1989), pp. 139-154, Richard A. Musgrave, "Horizontal Equity: A Further Note", 1 *Florida Tax Review* 6, (1993), pp. 354-359, Louis Kaplow, "A Note on Horizontal Equity", 1 *Florida Tax Review* 3, (1993), pp. 191-196 and Paul R. McDaniel & James R. Repetti, "Horizontal and Vertical Equity: The Musgrave/Kaplow Exchange", 1 *Florida Tax Review* 10, (1993) pp. 607-622, Eric Zolt, "The Uneasy Case for Uniform Taxation", 16 *Virginia Tax Review*, (1997), pp. 86-93.

[37] See Wolfgang Schön, "International Tax Coordination for a Second-Best World (Part I)", *World Tax Journal*, IBFD October 2009, p. 95.

[38] See H. David Rosenbloom, "Where's the Pony? Reflections on the Making of International Tax Policy", *Bulletin for International Taxation* 11 (IBFD) 2009, pp. 538-539

[39] See Robert L. Palmer, "Toward Unilateral Coherence in Determining Jurisdiction to Tax Income", 30 *Harvard International Law Journal* 1, (1989), p. 10.

This leads to the following question of whether equity is more important than efficiency (or vice versa). The discussion on the equity/efficiency trade-off is rich and varied. I limit myself to considering that the goals of equity and efficiency are important and both of them can be achieved[40] with regard to group taxation regimes. In fact, groups favour imposing equal taxes on taxpayers with equal incomes, because each business activity should be taxed in the same manner.

Therefore, economic operators should not be subject to unequal corporate tax treatment provided that all relevant economic circumstances are the same, therefore, being irrelevant *inter alia* the way business activities are structured.

3.4 Choices in the corporate structure of a group

The way to arrange a business is decisive from the perspective of enhancing its economic performance. Any taxpayer establishing an economic activity has to make choices.
The choices to be made involve a whole raft of issues: first of all, the decision on expanding or diversifying the activity or not. That being case, a fundamental choice is which entity to choose to perform such expansion or diversification. Several alternatives are possible. One may be to incorporate a company - subsidiary - which for this analysis is to be understood as an incorporated entity under the control of another corporate taxpayer.[41] A different alternative is the opening of a branch – permanent establishment – which is a mere extension of a company and does not involve incorporation. Similarly may be the case of opting to create a separate internal new department within the same entity or, in certain jurisdictions, opting to form a partnership. Between the several alternatives one may consider also organic growth, for instance, by merging with another company. All those realities have different legal requirements and provide different options from a strategic and managerial perspective. In addition, also from a tax perspective, the taxation of these different alternatives is not similar and in that regard it is a (most of the times crucial) factor to be considered.

All those fundamental choices about the entity to develop a business activity acquire particular relevance if combined with opting between cross-border activities or mere domestic ones. That is due not only to the fact that cross-border activities frequently have a higher degree of risk as they involve new markets but also because, from a tax perspective, they require international profit allocation. Overall, choosing the best entity generally entails an analysis of a myriad of both tax and non-tax considerations.

---

[40] It has been demonstrated that, at least in some cases, the equity/efficiency trade-off does not need to be made. See on this, Martin J. McMahon, Jr. & Alice G. Abreu, "Winner-Take-All Markets: Easing the Case for Progressive Taxation, 4 *Florida Tax Review*, (1998), p. 79.

[41] See Wolfgang Schön, "International Tax Coordination for a Second-Best World (Part I)", *World Tax Journal*, IBFD 10 (2009), p. 106.

3.4.1. Non-tax considerations

It is possible to find several business considerations[42] which are able to justify developing an activity through an incorporate form. Those considerations may be of a different nature such as:

i. It may be preferable to make use of multiple companies allowing the segregation of activities on a functional, geographical or production perspective;
ii. The separate legal personality allows subsidiaries and parent company or other members of the group to enter into contractual relations, including supply of goods, transfer of assets and allocation of risks;
iii. From the perspective of risk-management one of the most relevant business considerations in using a separate company relates to the limitation of liability and overall exposure to risk.[43] As a separate legal entity, the shareholders are not personally liable beyond their investment while the assets of the company are liable for the respective debts.
iv. The use of a separate legal entity is also relevant as regards the structure of investors as it facilitates the development of joint-ventures and the attraction of equity from other investors;
v. Separate companies may facilitate future sales of parts of the enterprise.
vi. Regulatory issues may also be relevant in some industries which may set barriers to the combination of different business lines in a single company.

Conversely, there might also be different legitimate business purposes to prefer to perform an activity by following an unincorporated form rather then a subsidiary structure. Among possible reasons one may find that:

i. Corporate maintenance is less expensive and less involved in some jurisdictions for an unincorporated form (e.g. a branch) then a subsidiary.
ii. It may be easier to establish and terminate an unincorporated activity.
iii. There is no need to appoint personnel to occupy officer/director positions.

---

[42] See James S. Eustice, "Tax Problems Arising From Transactions Between Affiliated or Controlled Corporations", 23 *Tax Law Review*, (1967), pp. 451-452, Larry Catá Backer, "The Autonomous Global Corporation: On the Role of Organization Law Beyond the Asset Portioning and Legal Personality", *Tulsa Law Review* 41 (2006), pp. 541-552, Alexandre Laurin, "Cleaning Up the Books: A Proposal for Revamping Corporate Group Taxation in Canada", *Commentary Fiscal Policy*, C. D. Howe Institute (2009), p. 6, Eleaonor Kristoffersson, "Groups of Companies and Intra-Company Dealings – A Comparison Between Income tax and Value Added Tax", in Michael Lang (eds.) *Value Added Tax and Direct Taxation: Similarities and Differences*, IBFD (2009), p. 919, and Miguel Correia "Taxation, Property and Market: The case of the Corporation Income Tax", *Católica Global School of Law Working Paper Series*, 19 January 2011, pp. 25-26, footnote 95.

[43] See inter alia, Phillip Blumberg, "Limited Liability and Corporate Groups", 11 *Journal of Corporation Law* (1986) pp. 611-623, Frank H. Easterbrook and Daniel R. Fischl, "Limited Liability and the Corporation, 52 *University of Chicago Law Review,* (1985) pp. 89-117 or Robert Rhee, "Bonding Limited Liability" 51 *William and Mary Law Review* (2010), pp. 1417-1488.

3.4.2. Tax considerations

As is referred to, one of the most fundamental concepts in a tax system is that, as a rule, each company is treated as a separate taxpayer whereas an unincorporated entity is not. The separate taxation of corporate entities is essentially justified[44] by the fact that the separate entity can be easily identified.

However, the separate entity approach leads to the existence of differences in the tax treatment as compared with unincorporated forms. Particularly in a cross-border context, a separate foreign subsidiary is typically treated differently from a tax point of view from a foreign branch in the home country State of the company.[45]

One of the most preeminent tax advantages arising from the fact that legally independent corporations are treated as independent taxable entities is the benefit of deferral.[46] This benefit is particularly striking in a cross-border scenario. The deferral privilege[47] allows residents in one State that conduct business overseas through a controlled[48] foreign company to defer paying tax on a controlled foreign corporation's foreign source business earnings until those are repatriated to those resident shareholders. Therefore, and within a multinational group, this means that the income of a foreign subsidiary is not taxable in the country of residence of the parent company until its remission to the parent.[49] The advantage is that, due to the time value of money, in the case the deferral period is sufficiently long, the present value of the deferred tax will fall to such a low level that virtually equals exemption. From this perspective, the deferral privilege encourages

---

[44] See Consultation Paper of the Department of Finance of Canada *The Taxation of Corporate Groups* (November 2010), available http://www.fin.gc.ca/activty/consult/tcc-igs-eng.pdf (accessed on 20 November 2011), p. 3

[45] A different alternative may be to carry on cross-border activities but without triggering the permanent establishment threshold. But here different tax issues arise when compared to having a tax presence in the host State, namely the inability of the taxpayer in the source State to deduct the related expenses due to the assessment of tax on a gross basis, typically through the withholding tax mechanism. For a discussion on this issue, see Rui Camacho Palma "The Paradox of Gross Taxation" 38 *Intertax* 12 (2010), pp. 624-642.

[46] There are also other tax benefits that may be more easily obtained by use of multiple corporations such as the use of stock options or other deferred compensation techniques with minimum dilution of the existing shareholder interests. See on this, James S. Eustice, "Tax Problems Arising from Transactions Between Affiliated or Controlled Corporations", 23 *Tax Law Review*, (1968), p. 452, footnote 4.

[47] See, *inter alia*, Robert J. Peroni, J. Clifton Fleming Jr. and Stephen E. Shay, "Getting Serious About Curtailing Deferral of U.S. Tax on Foreign Source Income", 52, *SMU Law Review*, (1999), pp. 458-470.

[48] There is a strict relation between deferral privilege and the exercise of control. This is because of the fact that the existence of control may allow to force or not a distribution of earnings. See, Joseph Isenbergh, "Perspectives on the Deferral of U.S. Taxation of the Earnings of Foreign Corporations, 66 *Taxes* (1988), pp. 1062-1063.

[49] Many tax systems provide, however, for anti-deferral regimes, mostly through the adoption of Controlled Foreign Corporation ("CFC") provisions.

residents in one State to locate business operations (or other activities such as passive investment activities) in other foreign low-tax States.

The separate entity approach also leads to tax disadvantages. Probably the most relevant one is the fact that between separate legal entities it is not possible to aggregate the respective business income for corporate tax purposes. This is particularly relevant as regards the impossibility to offset losses from one taxable entity against profits of another related entity. Differently, within a single entity such aggregation occurs. The same reasoning applies *mutatis mutandis* as regards the transfer of assets between different entities where the gains are typically subject to taxation and subject to the arm's length standard for the determination of the correct transfer pricing. Consequently, the separate entity approach also leads to situations of economic double taxation since, in the absence of any mechanism provided in the tax system, the same corporate income may be subject to multiple levels of taxation,[50] virtually as many as the number of companies which belong to the group chain. This happens because business income is subject to taxation first when earned by the company and again when distributed as dividends. This is even more apparent in a cross border scenario since international tax regimes are based on the existence of a double corporate tax: it allocates the corporate taxation to the State where business income is earned and the dividends are taxed where the recipient resides.

Considering the existing distinctions referred to above between corporate and unincorporated forms from a civil and corporate law perspective, the analysis turns into the taxation issues and whether the existing differences justify a different treatment[51] for tax purposes[52] when multiple companies resemble, from an economic point of view, a single company.
If the advancement of economic growth constitutes the objective (or one of the main objectives) of a fiscal policy, then tax law must be designed to advance an optimal use and allocation of resources. This would mean that the corporate legal structure of a group as well as organizational arrangements and location factors should be fundamentally independent of fiscal consequences. That requires tax neutrality which implies, at least in some cases, neutrality of tax treatment also with regard to the legal form. Such neutrality is required since the legal aspects are irrelevant for determining the amount of taxable profits. If it is true that one of the main features of separate legal entities – the limited liability –

[50] See, David A. Weisbach, "The Irreductible Complexity of Firm-Level Income Taxes: Theory and Doctrine in Corporate Tax" 60 *Tax Law Review* 4 (2007), p. 215 who refers in general to the "*multiple realization of the same income*".
[51] For critics, see Reuven Avi-Yonah and Kimberly A. Clausing, "Business Income (Article 7 OECD MC)", in M. Lang et al (eds.), *Source versus Residence: Problems Arising from the Allocation of Taxing Rights in Tax Treaty Law and Possible Alternatives*, EUCOTAX Series on European Taxation no. 20, Alphen aan den Rijn, The Netherlands: Kluwer Law International, (2008), pp. 9-20 stating that the current system is based on an artificial distinction among legal entities where companies are taxed differently depending on whether they use subsidiaries or branches.
[52] See Wolfgang Schön, "International Tax Coordination for a Second-Best World (Part I)", *World Tax Journal*, IBFD 10 (2009), p. 109.

allows carrying on an activity with more risk with potentially more profitability, it is also true that the legal form should play no role in regard to determining the taxable profits.[53]

3.5 The influence of taxation and the relevance of group taxation regimes

Existing research has demonstrated that corporate taxation frequently has an impact[54] on shifting between corporate and non-corporate activities and taxes do matter for organizational form decisions.[55]
Taxes influence behaviour[56] and therefore, corporate taxpayers tend to find substitutes for a transaction to reduce the respective taxation. That is because similar transactions are taxed differently and therefore, taxpayers tend to reorganize their affairs in order to achieve the lowest possible tax burden.

The influence of taxation on business structuring can be simply revealed every time that a taxpayer implements an alternative transaction to the one that it would have implemented based on its normal (non-tax) business considerations.[57] The purpose is to avoid or reduce taxation while at the same time, trying to achieve the closest identical economic result to the replaced transaction.[58]

The influence of taxation on taxpayers' behaviour is relevant from a tax policy perspective. Considering the previously identified principles of a tax system, an appropriate tax policy should avoid taxing similar activities differently because of the behavioural effects that it would have to taxpayers and the several associated economic problems.
For instance, looking for an alternative transaction promotes tax base erosion: taxpayers will search for the transaction substitute which allows them better tax savings. In turn, this will trigger a reaction for the tax system which will try to close the possible loopholes, most of the time through the enactment of a more or less complex set of general and specific anti-abusive tax rules which add complexity to the corporate income tax system and increase compliance burden.
In addition, the fact that a taxpayer is changing its economic choice due not to business reasons but to obtain a tax advantage leads to inefficiencies because an efficient corporate tax structure is not necessarily the most efficient from an operational and economic

[53] See Maarten F. de Wilde, "Some Thoughts on Fair Allocation of Corporate Tax in a Globalizing Economy", 38 *Intertax* 5, p. 288.
[54] See Miguel Correia, "Taxation, Property and Market: The case of the Corporation Income Tax", Católica Global School of Law, *WP Series*, 19 January 2011, pp. 1-37.
[55] See Austan Goolsbee, "Taxes, Organizational Form, and the Dead Weight Loss of the Corporate Income Tax, *Journal of Public Economics,* vol. 69, July 1998, pp. 143-152.
[56] See James R. Hines Jr., "Lessons from Behavioral Responses to International Taxation", 2 *National Tax Journal* 52 (1999), pp. 305-322.
[57] See Miguel Correia, "Taxation, Property and Market: The Case of the Corporation Income Tax", Católica Global School of Law, *Working Paper Series*, 19 January 2011, p. 10
[58] See Noël B. Cunningham & Deborah H. Schenk, "The Case for a Capital Gains Preference", 48 *Tax Law Review*, (1993), p. 351.

perspective and most of the time, it is not possible to find a perfect (equally efficient from the perspective of allocation of resources) substitute transaction.
The description of the preceding paragraphs allows to demonstrate clearly how tax distortions and their influence on the behaviour of taxpayers may affect the triptych benchmark of a tax system: it affects efficiency because the tax system affects the allocation of resources; it jeopardizes equity because taxpayers in identical circumstances will be taxed differently and it adds complexity to the tax system because it will increase compliance and it will trigger legislative reaction such to address base erosion.

The underlying concept is thus that similar economic realities should be treated similarly while different ones should be treated differently in so far as those differences justify a different tax result considering the standards of equity, efficiency and simplicity.

The above considerations are perfectly applicable regarding group taxation regimes. Different taxation may occur depending on whether corporations segregate their business operations based on divisions within a single corporation or rather incorporate subsidiaries within a corporate group. That being the case, the tax system is not neutral regarding the corporate structure and may affect the behaviour of taxpayers with bias towards adopting a corporate structure composed of a single company with several divisions rather then separate subsidiaries. Or by simply restructuring business operations through mergers, windups, converting subsidiaries into branches or other strategies which allow mitigating the less favourable treatment caused by the separate subsidiaries.
The general tax rules applicable to corporate groups potentially provide for a considerable array of distortive effects.[59] A group of companies *vis-à-vis* a single company is subject to different taxation even although from an economic point of view they are identical. The reason is because tax law in general follows corporate law and recognizes the legal form for tax purposes. In that regard, legal transactions between corporate affiliates (intra-group transactions) are recognized as a taxable event. The same situation occurs regarding intra-group dividend distributions giving rise to economic double (or multiple) taxation. In addition, aggregation of the group's business income for corporate tax purposes, that is, aggregation of the profits and losses of all the entities belonging to the group is not possible. Naturally, many of these problems could be addressed by specific legislative measures (e.g. elimination of the economic double taxation of distributed profits can be resolved by applying a participation exemption or imputation system). But these measures are not able to solve all the issues arising or to provide a comprehensive solution for these problems.[60]

[59] See for an analysis, Maarten F. de Wilde, A Step Towards a Fair Corporate Taxation of Groups in the Emerging Global Market", 39 *Intertax* 2, pp. 65-66.
[60] See Andrea Parolini, "Cross-Border Group Taxation Regimes: VAT/GST v. Direct Taxation" in Michael Lang (eds.) *Value Added Tax and Direct Taxation: Similarities and Differences*, IBFD (2009), p. 931.

Differently in the case of non-corporate entities, none of the above taxable events occur, and the income aggregation is possible for tax purposes. As a consequence, groups are subject to a different disadvantageous tax treatment when compared with single entities in the same circumstances. There is, in this regard, a distortive effect due to the adoption of the separate entity approach regarding corporate groups. This distortive effect may lead to the adoption of substitute transactions – a different legal form – in order to avoid the different taxation which burdens groups of companies.

As described more extensively below, the application of a group taxation regime will allow that the business reality of the group as one single economic operator is acknowledged for tax purposes. It therefore avoids the substitute transactions that could otherwise occur contributing to the goals of efficiency and equity of the tax system.

3.6 Interim conclusions

The way to arrange a business is motivated by maximizing economic performance. A taxpayer establishing or expanding its economic activity has to make choices. One of the most relevant decisions when deciding to expand or diversify a business is whether to do this by creating a separate legal entity or otherwise extending the existing company. That choice may be motivated by a myriad of business considerations but also by tax considerations considering the fundamental difference between a company which is treated as a separate taxpayer whereas an unincorporated entity is not. There are associated tax advantages and disadvantages by the fact that as a general rule, the tax system follows the separate entity approach recognizing each company as a separate taxpayer.

Conceptually a tax system should be guided by three fundamental principles: equity (fairness), efficiency and simplicity. This means that in an optimal scenario, a tax system should be neutral as regards influencing how a taxpayer should structure its business. The taxpayers' choices - amongst which, opting for an incorporated or unincorporated form for their activities - should be motivated by pure business considerations.

However, the separate entity approach leads to differences in the tax treatment between companies and unincorporated forms. Therefore, taxes will influence the taxpayers' behaviour. The tax-induced change in behaviour means that a taxpayer will try to arrange its transactions such to reduce its tax bill. It will search for alternative – substitute – transactions or structures which, although leading to (the closest) similar economic result, provide for a more advantageous tax treatment. However, every time an alternative transaction or structure is implemented, that is, one that replaces the transaction that would be implemented based on regular business considerations, the principles of the tax system are jeopardized: it leads to an inefficient allocation of resources, promotes inequity among taxpayers and promotes complexity and increased compliance on the tax system.

A group taxation regime allows that the business reality of a group is acknowledged by the tax system. By avoiding (at least to some extent) taxing similar structures differently, it addresses the behavioural effects that such differences has on taxpayers contributing to achieving the goals of a tax system.

Chapter 4

Reasons for the Existence of Group Taxation Regimes

4.1 Introduction

As referred to above, the corporate taxation systems are typically structured based on the principle of the separate treatment of each company. The introduction of a regime that allows the taxation of the companies as a group represents a deviation to that principle. It is then necessary to search for the policy reasons that may justify the adoption of specific rules that do not follow the general rules that apply to the taxation of companies. The diversity of group taxation regimes reveals the existence of several policy objectives.[61] The identification of those reasons must be based on a correct assessment of the main principles that within but also beyond the tax system may justify that a corporate group is subject to a special taxation regime. In that regard, the tax policy reasons underlying the adoption of group taxation regimes should be considered.

4.2. Efficiency considerations

4.2.1 Neutrality

The main reason that justifies the adoption of a special tax regime for corporate groups is based on the *principle of neutrality*[62] in taxation of income from corporate activity.[63] Such principle lies in the assumption that the fiscal system should tax income in the same way irrespective of the business structure and the legal form chosen[64] to perform an activity.

---

[61] See in general, Goncalo Avelas Nunes, *Tributacao dos Grupos de Sociedaes pelo Lucro Consolidado em sede de IRC – Contributo para um novo enquadramento dogmático e legal do seu regime*, Almedina (2000), pp. 47-60.

[62] See Bertil Wiman, "Equalizing the Income Tax Burden in a Group of Companies", 28 *Intertax* 10 (2000), p. 352.

[63] Concerns about the principle of neutrality in the taxation of companies are not unknown to national tax systems. The regimes applicable to mergers, divisions, transfers of assets and exchange of shares are some of the most blatant examples of the principle of neutrality as applied to companies.

[64] See Y. Matsui, IFA General Report, "Group Taxation", *Cahiers de droit fiscal international*, Vol. 89b, (2004), pp. 35-36. According to this author's view, the neutrality argument is a myth since different organizational structures do not represent exactly the same reality and therefore he concludes that neutrality is not a decisive argument in its own terms. From my point of view, the issue should be whether, from a tax perspective, these different structures should be taxed differently, which should be answered in the negative. In the end, Matsui concludes that group taxation regimes should be taken into account based on efficient resource allocation and on fairness of income distribution. This means that Matsui ends up agreeing that neutrality is indeed a major factor justifying the adoption of group taxation regimes and achieved by this type of legislation.

The solutions of the tax system should not determine the form adopted by companies to conduct their businesses as such form should constitute the best possible solution based on the most efficient allocation of resources that allows optimizing profits and the advantages of investments without distortions introduced by tax reasons.

As stated, typically tax systems traditionally adhere to the legal notion of the separate corporate personality. This notion should, however, take into account the fundamental aim of conformity of tax rules with economic reality.[65] Group taxation regimes are one of the most (if not the most) important devices to achieve the goal of conformity to economic reality by allowing corporate groups to act as unitary economic enterprises therefore relieving the inefficiency[66] that the above legal notion introduces in the system.[67] The principle of neutrality in its purest sense requires a tax consolidation system that completely disregards all the group members and consequently, all the transactions performed within the group. However, the extent of integration provided by group taxation regimes varies among countries and not all of them achieve the neutrality at the level referred to above.[68]

4.2.2 Avoidance of excessive taxation

One of the aims of group taxation regimes is also to avoid excessive or inappropriate taxation in regard to the overall income of the group in comparison with a single company in the same conditions. Naturally, the group taxation regime should not contribute to achieve less taxation[69] than it would otherwise incur in the case the activities were carried on by a single company as it would be contrary to the principle of neutrality referred to above.

---

[65] See EU Commission "Common Consolidated Corporate Tax Base Working Group (CCCTB WG) – Issues related to group taxation" *Working Document CCCTB\WP\035\doc\en* (5 May 2006), paragraph 14, or Antony Ting, "Policy and membership requirements for consolidation: a comparison between Australia, New Zealand and the US, *British Tax Review* 3 (2005), p. 312-313.

[66] See Yariv Brauner, "Policy Forum: Taxation of Corporate Groups – Lessons from the United States, 59 *Canadian tax Journal* 2 (2011), p. 296.

[67] This aim is perfectly stated in the Consultation Paper of the Department of Finance of Canada *The Taxation of Corporate Groups* (November 2010), available at: http://www.fin.gc.ca/activty/consult/tcc-igs-eng.pdf (accessed on 20 November 2011) which states that:

> "In the context of corporate groups, efficiency is enhanced when the unit of taxation more closely matches the economic reality of a corporate group that is an economically integrated unit. Distortions could otherwise occur if the system for taxing corporate groups creates a conflict between efficient tax and business structures or if it provides different treatment for corporate structures that are functionally equivalent. Distortions can also arise if the system for taxing corporate groups leads to structures and transactions that distort market signals. For example, differences between the economic, legal and tax treatment of profits and losses could result in an inefficient allocation of resources."

[68] See the analysis in Chapter 6 *infra*.

[69] See Bertil Wiman, "Equalizing the Income Tax Burden in a Group of Companies", 28 *Intertax* 10 (2000), p. 356.

4.2.3 Competitiveness

One of the non-tax policy aims related to the adoption of a group taxation regime is to promote competitiveness. The policy challenge inherent to the concept of competitiveness implies the maintenance and even expansion of the real income of citizens considering the global international markets and the policies of other countries. As referred to previously, the setting up of a group in itself is linked to an expansion strategy of an enterprise either because it intends to establish itself in new markets or to increase or diversify its production. Adopting a group structure allows to achieve organizational and internalization advantages in order to avoid the inefficiencies that arise when separate companies transact with one another under market conditions. In that regard, it is relevant to stimulate the developments of groups in order to provide them conditions to be competitive in such markets. The taxation plays an important if not a decisive role. In that regard, the existence of groups for tax purposes in the way that better reflects the ability to pay principle allowing a fairer taxation of the companies of the group can be considered as a policy measure that stimulates the national and international competitiveness of groups.[70]

A clear-cut example derives from the fact that new operations tend to incur losses in their initial stages,[71] so that it is advisable from a tax policy perspective to allow the immediate offset of those losses against the profits of the remaining group. As a consequence, the introduction of group taxation regimes makes the tax system more competitive. This, in turn, leads to increased investment, economic activity and employment.

From a fiscal policy perspective, tax groups can also be seen as a reaction to avoid those companies from moving to other countries with lower tax rates. In addition, if applied on a cross-border basis, it may be relevant for attracting the location of the central management of groups within a certain State.[72]

---

[70] See Consultation Paper of the Department of Finance of Canada *The Taxation of Corporate* Groups"(November 2010), available at: http://www.fin.gc.ca/activty/consult/tcc-igs-eng.pdf (accessed on 20 November 2011) which states that:

> "An efficient tax system also contributes to providing a more competitive environment for businesses, making Canada a preferred investment location compared to other countries".

[71] See Y. Matsui, IFA General Report, "Group Taxation", *Cahiers de droit fiscal international*, Vol. 89b, (2004), p. 36 or Antony Ting, "Australia's Consolidation Regime: A Road of No Return?" , *British Tax Review* 2 (2010), p. 163.

[72] See Wolfgang Schön, "Group Taxation and the CCCTB", 48 *Tax Notes International* 11 (10 December 2010), p. 1069.

4.3. Equity considerations

4.3.1 Fairness

The underlying assumption is that relevance for tax purposes should rely not on the legal form of the entity to tax but rather to identify and tax the effective income received by the whole group and not by each of the member companies separately.

Therefore, and identically to what happens within the same company, the same treatment should be granted to corporate groups which represent a single unit from an economic perspective. If the underlying concept is that corporate groups which, for the application of group taxation, are required to be in the same situation as a single company, group taxation regimes are also based on the principle of equal taxation of identical economic situations.[73]

4.3.2 Prevention of tax avoidance

Another objective which is typically associated with the perspective of looking at a group as a tax unit is the prevention of tax evasion that may otherwise occur by undertaking transactions among group members that lead to abuses of the corporate income tax system.[74] In fact, the entity approach combined with the existence of financial and/or contractual relations among the companies of the group make it simple to transfer profits/losses or assets from one company to the other in a way to minimize the overall tax burden of the group. A group taxation regime may, therefore, prevent potential tax planning[75] that may otherwise occur through the shifting of income between group members.

4.3.3 Non-discrimination

Corporate tax groups arose from the need to prevent some sort of discrimination between legal forms and distortions of competition.[76] They correspond with a specific tax regime that allows imposing a tax burden over the income of the group which is close to the income that would arise in the case it was a single company. In that regard, they allow

---

[73] See Y. Matsui, IFA General Report, "Group Taxation", *Cahiers de droit fiscal international*, Vol. 89b, (2004), p. 36 and the Consultation Paper of the Department of Finance of Canada *The Taxation of Corporate Groups* (November 2010), available at: http://www.fin.gc.ca/activty/consult/tcc-igs-eng.pdf (accessed on 20 November 2011) with the reference that:

> "The principle that corporate groups with similar or equivalent structures should be taxed in a similar way is important for making the tax system fairer as well as more efficient."

[74] See Graeme S. Cooper, "Policy Forum: A Few Observations on Managing the Taxation of Corporate Groups – The Australian Experience", 59 *Canadian Tax Journal* 2 (2011), p. 278.

[75] See Antony Ting, "Australia's Consolidation Regime: A Road of No Return?" , British Tax Review 2 (2010), pp. 165-166.

[76] See Dieter Endres, "The Concept of Group Taxation: A Global Overview", 31 Intertax, Vol. 10, (2003), p. 349.

avoiding discriminating companies which opted to form a group in order to develop their activities.

4.4 Simplicity considerations

One of the objectives which are commonly referred to in the adoption of group taxation regimes is the reduction of complexity and compliance costs (for example, by filing a single tax return). Grouping tax rules may allow a more accurate assessment of the position of a collection of entities and facilitate compliance.[77] The aim of simplicity traditionally reflects the existing of conflicting objectives: the complexity of the rules is largely dependent on the type of regime adopted.[78] A regime that achieves a higher degree of integration will, in general, be more complex due to the need to consider a whole range of rules to regulate the different aspects of its design[79] while a less far reaching one will be simpler and easier to administrate.

4.5 Interim conclusions

The tax policy reasons underlying the adoption of group taxation regimes are guided by principles of efficiency, equity and simplicity.

First of all, group taxation regimes promote neutrality because taxation conforms with economic reality rather than with the legal form. It provides competitiveness to group structures and avoids excessive or inappropriate taxation because it taxes the overall income of the group as a single company. Therefore, economic choices are not distorted based on the organic structure chosen to carry on a certain activity.

Group taxation regimes are also driven by equity considerations. By looking at a group as a tax unit, it identifies the effective income received by the whole group, effectively taking into account the underlying economic reality. In addition, it may prevent tax avoidance by disregarding transactions among group members and prevent discriminatory treatment as regards companies that opted for structuring as a group.

Finally, the adoption of group taxation regimes may contribute to simplifying the administrative burden and reducing compliance costs.

---

[77] See Graeme S. Cooper, "Policy Forum: A Few Observations on Managing the Taxation of Corporate Groups – The Australian Experience", 59 *Canadian Tax Journal* 2 (2011), p. 279.
[78] See Maureen Donnelly and Allister W. Young, "Policy Forum: Group Relief for Canadian Taxpayers – At Last?", 59 *Canadian Tax Journal* 2 (2011), p. 263.
[79] See the different aspects in Chapter 6 *infra*.

Chapter 5

Relevance of Group Taxation Regimes and "the Global Market"

5.1 Introduction

Foreign activities are increasingly important for corporate groups that therefore tend to develop their activities, perform transactions and expand on a global scale.

The arguments previously raised that justify the adoption of group taxation regimes are also applicable in a cross-border scenario. In fact and considering the goals of a tax system, it can be said that in an international perspective, a taxpayer should not pay more tax than in the case it would limit his activities within a State's borders.[80]

The reasoning is identical to the one already developed throughout the preceding chapters: the international tax rules should be efficient in the sense that they do not discourage the taxpayer from engaging in cross-border transactions if it makes economic sense to do so. The taxation of multinational corporate groups should not encourage structuring businesses based on tax motivations that would lead to distortive effects. Economic considerations rather than tax considerations should drive a taxpayer's choice for the location of investment. Reconsideration of the tax treatment of multinational companies places tax policy toward those groups as a central policy concern.[81]

5.2 The goals of the international tax system

The basic goals of an international tax system are the same ones which are commonly evoked in domestic tax policy:[82] (i) simplicity, (ii) equity, and (iii) efficiency. Deploying these goals in the international context is not a simple task.
Equity (fairness) and efficiency, in fact, are essential attributes of international income taxation which means that tax rules should distribute the tax burden based on ability-to-pay considerations and should neither favour nor disfavour foreign business and investment activities.

---

[80] See Ramon J. Jeffrey, *The Impact of State Sovereignty in Global Trade*, Series on International Taxation 23, Kluwer Law International (1999), p. 22.
[81] See Mihir A. Desai, "New Foundations for Taxing Multinational Corporations", *Taxes* (March 2004), p. 46.
[82] See Diane Ring, "International Tax Relations: Theory and Implications, 60 *Tax Law Review* (2007), pp. 87-90, Kevin Holmes, *International Tax Policy and Double Tax Treaties: An Introduction to Principles and Application*, IBFD (2007), pp. 74-90 or Peggy B. Musgrave, "Sovereignty, Entitlement, and Cooperation in International Taxation, "26 *Brooklyn Journal of International Law* 4 (2001), pp. 1338-1339, 1346-1347.

The efficiency debate from an international tax perspective[83] is generally attributed to the distinction between capital export neutrality (CEN) and capital import neutrality (CIN). CEN means that an investor should pay the same total (domestic plus foreign) tax irrespective of whether it receives the income from foreign or domestic sources. CIN means that income originating in various countries should compete on equal terms in the capital market of any country. CEN is satisfied by a worldwide residence-based tax system with unlimited foreign tax credits to neutralize the relative incentive effects of source countries varying tax rates, whereas CIN is satisfied by a territorial system in which everyone treats foreign source income as exempt.[84] But if the efficiency analysis is typically linked to those who advocate either CIN or CEN, the fact is that it has been argued[85] that issues of equity are implicated in these criteria as well. In fact, the link with equity concerns in an international context are revealed[86] by providing double taxation relief as a response to the unfairly burdensome taxation that would otherwise arise over income earned internationally. The non-discrimination[87]principle in tax treaties which aims at guaranteeing a fair treatment to foreigners and foreign businesses by treating them no less favourably than domestic ones is also a manifestation of equity.[88] Equity considerations are therefore also relevant from an international tax policy perspective,[89]and are traditionally analysed considering the principles of residence and source taxation.[90] Therefore, the principles that

[83] A further issue is whether in the international tax system one should distinguish between two different perspectives of efficiency: national efficiency and worldwide efficiency. See on this debate, Diane M. Ring, "One Nation Among Many: Policy Implications of Cross-Border Tax Arbitrage", 1 *Boston College Law Review* 44 (2002), pp. 102-103 or Klaus Vogel "Worldwide vs. source taxation of income – A review and re-evaluation of arguments (Part II)", *Intertax* 10 (1988), p. 310.

[84] See Daniel N. Shaviro, "Rethinking Foreign Tax Creditability", 4 *National Tax Journal* 63 (2010), pp. 718-720, Daniel N. Shaviro ""Why Worldwide Welfare as a Normative Standard in U.S. Tax Policy?" *Tax Law Review* 60 (2007), pp. 168-169, Mihir A. Desai and James R. Hines, "Old Rules and New Realities: Corporate Tax Policy in a Global Setting, 4 *National Tax Journal* 56 (2004), pp. 955-957, Michael J. Graetz and Itai Grinberg, "Taxing International Portfolio Income" *Tax Law Review* 56 (2002), pp. 559-569, Tsilly Dangan, "National Interests in the International Tax Game", *Virginia Tax Review* 18 (1998), pp. 364-416, or Klaus Vogel "Worldwide vs. source taxation of income – A review and re-evaluation of arguments (Part II)", *Intertax* 10 (1988), pp. 311-312.

[85] See Michael J. Graetz, "The David R. Tillinghast Lecture – Taxing International Income: Inadequate Principles, Outdated Concepts, and Unsatisfactory Policies", 54 *Tax Law Review* (2000), pp. 305.

[86] See Michael J. Graetz, "The David R. Tillinghast Lecture – Taxing International Income: Inadequate Principles, Outdated Concepts, and Unsatisfactory Policies", 54 *Tax Law Review* (2000), pp. 299-300.

[87] See Richard A. Musgrave, *Fiscal Systems*, New Haven and London: Yale University Press (1969), pp. 247-252 who stresses the relation between equity and efficient regarding non-discrimination.

[88] Although, as stated, it only aims at achieving equity in the sense of preventing less favourable treatment to foreigners, it does not prohibit granting them a more favourable treatment than that to domestic ones.

[89] See Wolfgang Schön, "International Tax Coordination for a Second-Best World (Part I)", *World Tax Journal* 1 IBFD (2009), pp. 71-73, J. Clifton Fleming Jr., Robert J. Peroni and Stephen E. Shay, "Fairness in International Taxation: The Ability-to-Pay Case for Taxing Worldwide Income, 5 *Florida Tax Review* 4, (2001), p. 302 or Nancy H. Kaufman, "Fairness and the Taxation of International Income" 29 *Law & Policy In International Business* 2 (1998), p. 148.

[90] Typically, international equity based on residence would be grounded on the ability-to-pay theory and source taxation by reference to the benefit theory. See Klaus Vogel "Worldwide vs. source taxation of income – A review and re-evaluation of arguments (Part III)", *Intertax* 11 (1988), pp. 334-335 or Nancy H. Kaufman,

justify the existence of group taxation regimes from a domestic tax policy perspective are entirely applicable in a cross-border dimension.

5.3 The structure of the international tax system

Multinational groups dominate the globalized economy. However, States' jurisdiction to tax the business profits that those corporate groups realize does not extend beyond national borders. International tax law draws a distinction between objective and subjective criteria for allocating taxing rights.[91] The subjective criteria refer to the existence of a certain attachment to a State, most commonly being residence (and in some cases nationality). The objective criteria refer to the taxation of income which is directly linked to a State (because a certain taxable event justifies the taxation on that State).

The consequence is that if tax liability is based on a subjective criterion, a taxpayer will be typically taxed on its worldwide income, whereas if based on an objective criterion, the taxation will be limited to the income – the economic attachment[92] - that it is sourced in a particular State. This structure is the basis of the majority of the international tax rules of State's tax systems which, accordingly, exercise two types of taxing jurisdictions: residence based and sourced based jurisdiction. Because each company of the groups is treated as a separate taxpayer, and since the foreign companies are not resident in the State of the parent company, they are not subject to the tax jurisdiction of that State. At this stage, it is already possible to advance that similar problems to those that are encountered by corporate groups in a domestic scenario also exist in a cross-border scenario. But, in this case, they are enhanced[93] by the potential multiple jurisdictions claiming tax rights over each of the companies belonging to the group.

The application of the rules referred to above for the taxation of multinational groups means that the foreign source income earned by a parent company of one State through foreign corporations in other States will generally not be subject to taxation in the residence State of the parent company until the income is repatriated. Upon repatriation, the dividends distributed may be taxed at the parent company level leading to double (or multiple) economic taxation[94] of the overall group considering each one of its member companies.

"Fairness and the Taxation of International Income" 29 *Law & Policy In International Business* 2 (1998), p. 153.

[91] See Stef van Weeghel, "Thoughts on Territoriality in Relation to Dutch Corporate Tax Reform", in *Liber Amicorum Jacques Malherbe*, Bruylant (2006), pp. 1132-1134 or Otto Marres, "The Principle of Territoriality and Cross-Border Loss Compensation", 39 *Intertax* 3, pp. 112-113.

[92] See Rutsel Silvestre J. Martha, *The Jurisdiction to Tax in International Law – Theory and Practice of Legislative Fiscal Jurisdiction*, Series on International Taxation no. 9, Kluwer Law (1989), p. 54.

[93] See Carl S. Shoup, "Taxation of Multinational Corporations", in *The Impact of Multinational Corporations on Development and on International Relations*, UN Technical Papers: Taxation, NY 1974, p. 3.

[94] See Walter Hellerstein, Georg W. Kofler and Ruth Mason, "Constitutional Restraints on Corporate Tax Integration", 62 *Tax Law Review* (2008), pp. 2-4.

That, by itself, is distortive[95] from an economic perspective as the same would not occur in the case the group decided to operate directly rather than through a separate legal entity.[96] In that regard, it is contrary to the objective of a "group neutral" tax law and renders less attractive the establishment of foreign subsidiaries.[97] The different treatment is also revealed by the existence of mechanisms on a domestic basis which allow treating several companies as a single unit – through a group neutral legislation which follow an enterprise approach for tax purposes – but are absent in a cross border scenario. That is relevant, not only for the purposes of elimination of double (or multiple) corporate income tax imposition of the profits of subsidiaries but also for the fundamental benefit that derives from the possibility to reciprocally offset losses between the companies belonging to a tax group.

The non-recognition of cross-border corporate groups gains particular relevance and places an additional problem due to transfer pricing. This is due to the fact that, within a cross-border context, the issue is not only about allocating income between taxpayers but also between jurisdictions.[98] Transfer pricing relates to the establishment of prices for goods, services or use of property by related entities of the same group. It corresponds to the price that independent parties would have paid if they were engaged in the same or similar transactions under the same or similar conditions. This means that, for the purposes of determining the arm's length price, this should be determined as transactions between unrelated parties. But when dealing with related parties the problem arises precisely due to the absence of unrelated parties to set the financial terms of those relations.[99]

The arm's length assumption that each affiliated company within the group transacts with the other members of the group in the same way that it would transact if the members were unrelated defies reality.[100] It ignores the fact that one of the reasons that corporate groups

---

[95] See Richard J. Vann, IFA General Report "Trends in company/shareholder taxation: single or double taxation?", *Cahiers de Droit Fiscal International Volume LXXXVIIIa*, 57th Congress of the International Fiscal Association, Sydney 2003, p. 23.

[96] Wolfgang Schön, "International Tax Coordination for a Second-Best World (Part I)", *World Tax Journal* (October 2009), pp. 110-111.

[97] See Wolfgang Schön, "Group Taxation and the CCCTB" 48 *Tax Notes International* 11 (10 December 2007), pp. 1071-1072.

[98] See OECD *Transfer Pricing Guidelines for Multinational Enterprises and Tax Administrations* (July 2010), Preface, paragraph 12, Wolfgang Schön, "International Tax Coordination for a Second-Best World (Part III)", *World Tax Journal* 2 (2010), p. 230, Nancy H. Kaufman, "Fairness and the Taxation of International Income", 29 *Law & Policy in International Business* 2 (1998), pp. 146-147 or James R. Hines Jr. "The Transfer Pricing Problem: Where the Profits Are", *NBER Working Paper Series*, (1990).

[99] See Richard L. Kaplan, "International Tax Enforcement of the Special Transfer Pricing Challenge", *University of Illinois Law Review* (1990), pp. 300-301.

[100] See Reuven S. Avi-Yonah, "The Rise and Fall of Arm's Length: A Study in The Evolution of U.S. International Taxation", *Virginia Tax Review* 15 (1995), pp. 89-159, Walter Hellerstein, "The Case for Formulary Apportionment", *International Transfer Pricing Journal* IBFD (2005), p. 107, Reuven S. Avi-Yonah, "Between Formulary Apportionment and the OECD Guidelines: A Proposal For Reconciliation", *World Tax Journal* 2 IBFD (2010), pp. 4-5, Wolfgang Schön, "Transfer Pricing, the Arm's Length Standard

arise is to precisely avoid the inefficiencies that occur when unrelated companies are at arm's length with each other.[101] The existence of multinational groups allows them to organize their production and distribution in a way which cannot be achieved in the open market by internalizing transaction costs which increase efficiency in raising capital, advertising products, achieving economies of scale and protecting valuable intangibles. Multinational companies operate as an economic unit and not as if they were unrelated parties.[102] In that regard, the intra-firm transactions are disconnected from the arm's length standard which relates to market prices because such standard does not consider the efficiency requirements which are related with an integrated group[103]. The fact that within a cross-border group the multiple companies cannot be treated for tax purposes as a single economic unit leads to distortions because, in itself, the transfer pricing standard disregards the rationality of intra-group transactions[104] which are different to the one that applies between independent firms.[105] The income allocation inherent with transfer pricing actually distorts economic reality[106] because it separates something which is only achieved due to the integration. The transfer pricing issue holds true not only in the case of separate corporate entities but also within a single corporate entity when it has a PE located in another State. The adoption of the Authorized OECD Approach regarding the attribution of

---

and European Union Law", *Working Paper of the Max Planck Institute for Tax Law and Public Finance No. 2011-08*, available at http://papers.ssrn.com/sol3/papers.cfm?abstract_id=1930237 (accessed on 4 November 2011), Richard Vann, "Reflections on Business Profits and the Arm's Length Principle", *Sydney Law School Legal Studies Research Paper* no. 10/127, November 2010, available at http://ssrn.com/abstract=1710945 (accessed on 8 July 2011), pp. 139-142.

[101] See also S. Mayer, *Formulary Apportionment for the Internal Markets,* Online Books IBFD (accessed on 3 November 2011) who states that these problems are exacerbated within the EU by the removal of non-tax barriers to conducting business across borders

[102] See Reuven Avi-Yonah and Kimberly A. Clausing, "Business Income (Article 7 OECD MC)", in M. Lang et al (eds.), *Source versus Residence: Problems Arising from the Allocation of Taxing Rights in Tax Treaty Law and Possible Alternatives*, EUCOTAX Series on European Taxation no. 20, Alphen aan den Rijn, The Netherlands: Kluwer Law International, (2008), p. 11.

[103] This issue is actually acknowledged by the Financial Accounting Standard 57 of the US GAAP regarding related-party transactions which states in para. 3:

> "3. Transactions involving related parties cannot be presumed to be carried out on an arm's-length basis, as the requisite conditions of competitive, free-market dealings may not exist. Representations about transactions with related parties, if made, shall not imply that the related party transactions were consummated on terms equivalent to those that prevail in arm's-length transactions unless such representations can be substantiated."

[104] In fact, the internal motivation to develop a transfer price is reduced or even non-existent. The management of the group is concerned with the overall profit and not with the profit at a particular stage. See Detley F. Vagts, "The Multinational Enterprise: A New Challenge for Transnational Law", *Harvard Law Review* 83 (1969), p. 764.

[105] See Wolfgang Schön, "Transfer Pricing, the Arm's Length Standard and European Union Law", *Working Paper of the Max Planck Institute for Tax Law and Public Finance No. 2011-08*, available at http://papers.ssrn.com/sol3/papers.cfm?abstract_id=1930237 (accessed on 4 November 2011)

[106] See Reuven S. Avi-Yonah, "The Rise and Fall of Arm's Length: A Study in The Evolution of U.S. International Taxation", *Virginia Tax Review* 15 (1995), pp. 147-151.

profits to PEs has provided similar relevance of the arm's length standard for the allocation of business profits for both parent company/subsidiary and head office/PE situations.

On the whole, the current rules for the international allocation of income among States are determined by the separate entity doctrine and affected by the arm's length principle as embedded in the more than 3,000 bilateral tax treaties. Still, as a tax treaty's main goal is to promote is to promote the exchange of goods and services and the flows of capital between the signatory countries through the elimination of tax obstacles to trade, it is relevant to analyze the way in which tax treaties address group taxation regimes and can affect tax groups.

5.4 The EU Internal Market

The concept of the Internal Market is central to the EU and is still its principal economic rationale.[107] The underlying concept of the Internal Market is the removal of physical, technical and fiscal barriers in order to allow the creation of a single and large market at the EU level which enables players to make economies of scale and become more competitive. The methods to achieve an internal market involve both negative[108] integration, through the removal of restrictions, as well as positive[109] integration, through the adoption of harmonizing measures aimed at the formation and creation of common policies.
There is a direct link between company taxation and the EU Internal Market,[110] as restrictions or disparities of fiscal character may induce companies to establish themselves in places other than those that would be more favourable from a pure business perspective. In other words, corporate taxation should be neutral to the free flow of factors to their most

---

[107] See Craig and De Búrca, *EU Law, Text, Cases and Materials*, Oxford University Press, 4th Edition (2008), p. 604 or D. Chalmers et al. *European Union Law, Text and Materials*, Cambridge University Press (2009), p. 465.

[108] In this regard, see ECJ 5 May 1982, C-15/81, *Gaston Schul Douane Expediteur BV v Inspecteur der Invoerrechten en Accijnzen, Roosendaal,* para. 33 where the Court stated that:

> "the concept of common market as defined by the Court in a consistent line of jurisprudence involves the elimination of all obstacles to intra-Community trade in order to merge the national markets into a single market bringing about conditions as close as possible to those of a genuine internal market".

See also, *inter alia*, ECJ 9 February 1982, C-270/80 *Polydor Limited and RSO Records Inc. v Harlequin Records Shops Limited and Simons Records Limited,* paras. 18-20.

[109] See ECJ, 11 June 1991, C-300/89 C*ommission of the European Communities v Council of the European Communities,* where the Court stated in para. 15:

> "In order to give effect to the fundamental freedoms mentioned in Article 8 A, harmonising measures are necessary to deal with disparities between the laws of Member States in areas where such disparities are liable to create or maintain distorted conditions of competition. For that reason, Article 100 A *empowers* the Community to adopt measures for the approximation of the provisions laid down by law, regulation or administrative action in Member States and lays down the procedure to be followed for that purpose."

[110] See H. Onno Ruding, "The David R. Tillinghast Lecture – Tax Harmonization in Europe: The Pros and Cons", 54 *Tax Law Review* (2000), p. 102.

productive locations within the EU. Corporate taxes should not distort the functioning of the internal market. At the same time, they should also not lead to a different treatment among taxpayers who are in the same economic position. Therefore, the goals of a tax system identified above and in particular the notions of equity and economic efficiency also lie at the heart of the EU.[111] Both equity and efficiency acquire special importance[112] where the most relevant aspect of a legal system is free economic action since the application of taxes may treat similar economic operators and so distort their choices of where and how to make their investments. This is relevant within the EU, considering the existence of the economic freedoms that aim to protect this Internal Market system.

The principles of equity and efficiency are not specified principles in EU Law. But they constitute interpretative criteria and it is possible to find some references to them within the EU Law framework.
Article 26 (2) TFEU contains the definition of internal market as:

> "[…] an area without internal frontiers in which the economic freedoms - free movement of goods, persons, services and capital - is ensured in accordance with the provisions of the Treaty."

The realisation of the internal market presupposes that the fundamental freedoms are directly effective prohibitions of restrictions or discriminations. This implies national treatment between domestic and cross border situations and therefore, relates to the goal of equity and efficiency.

The underlying economic policy of achieving a free and efficient allocation of resources within the EU is clearly provided by the second part of Article 120 of the TFEU that lays down that:

> "[…] The Member States and the Union shall act in accordance with the principle of an open market economy with free competition, favouring an efficient allocation of resources, and in compliance with the principles set out in Article 119." [underscore BdS]

Also in the reasoning followed by the CJ, it is possible to identify that the concept of internal market requires that domestic and cross-border activities of taxpayers are to be compared. And in that regard, the Court usually finds a restriction to exist when cross-border activities are subject to less favourable treatment (equity goal) that domestic ones. The same applies as regards identical treatment irrespective of the legal form.

---

[111] See Adolfo J. Martin Jimenez, *Towards Corporate Tax Harmonization in the European Community: an Institutional and Procedural Analysis*, Series on International Taxation no. 22, Kluwer Law International (1999), pp. 7-10.
[112] See in general Takis Tridimas, *The General Principles of EU Law*, Oxford EC Law Library 2nd edition (2005), pp. 59-135.

That is due to the fact that different (unfavourable) treatment hinders – in the sense that it makes less attractive – the investment or establishment in another Member States (concept of efficient allocation of resources).

There is an efficiency-based logic[113] and fairness rationale behind the Court's case law. In order to ensure optimal use of resources within the EU as determined by the goals of the TFEU, allocation decision should not be distorted by legal obstacles. And these distortions arise if changes in the organisational structure (e.g. to develop the activity through a corporate group or a single entity) lead to relevant legal frictions due to the fact that cross border situations are treated less favourably than domestic ones. Taxation is relevant for the functioning of the internal market because tax-obstacles affect the functioning of the internal market.[114]

In a certain way the ideal of internal market and corporate tax groups coincide: the internal market aims to remove the barriers in order for the Member States markets to be as treated as a single one; similarly, the concept of tax groups where a group of companies which apply for the group taxation regime should be treated in the same way as a single company. In a nutshell, both aim at achieving neutrality: in the case of tax groups limited to taxation, in the case of the internal market with a much broader scope including any obstacles to free movement of goods, persons, services and capital.

It happens that each Member State retains its fiscal sovereignty under EU Law and, in that regard, it can freely define the concept of tax group. Naturally, the considerable degree of heterogeneity as revealed from the analysis above and, in particular, the different conditions that apply between domestic and cross-border situations, can affect EU market efficiency and the international circulation of goods, services and capital between group entities in different Member States. In other words, from a group perspective, tax neutrality is not achieved (at least on a cross-border dimension) and that naturally affects the economic players' choices. In fact, multinational groups are put at a disadvantage when compared with purely domestic groups and also face a different tax treatment when compared with single entities. The different tax treatment granted to multinational groups makes intra-EU business activities of groups less attractive, distorting the functioning of the internal market, thus giving rise to a cross-border obstacle.[115]

That being the case, and considering the parallel that I have drawn in the preceding paragraph, those aims have not been achieved: the internal market is not fully achieved in the sense that there are still existing fiscal barriers for economic players, and that happens

---

[113] See Wolfgang Schön, "The Mobility of Companies in Europe and the Organizational Freedom of Company Founders", 3 *European Company and Financial Review* (2006), pp. 130-133.

[114] See H. Onno Ruding, "The David R. Tillinghast Lecture – Tax Harmonization in Europe: The Pros and Cons", 54 *Tax Law Review* (2000), p. 103.

[115] Similarly, see Maarten F. De Wilde, "On X Holding and the ECJ's Ambiguous Approach towards the Proportionality Test", *EC Tax Review* 2010/4, Kluwer Law International BV, p. 174.

because (amongst other reasons) the tax groups goal is not reached since no effective tax neutrality exists on a cross-border basis.

5.5 Interim conclusions

In the current globalized world, it is particularly relevant to address group taxation regimes from an international perspective. The arguments that justify the adoption of group taxation regimes from a domestic perspective are also applicable at an international and EU level.

The cross-border element poses additional challenges when treating the different group members as a single unit. This is due to the limitations as regards tax jurisdiction and the possibility to tax foreign taxpayers, the potential overlap of jurisdictions claiming taxing rights over each of the companies belonging to the group and the income allocation deriving from the arm's length principle.

Nevertheless, equity and efficiency in particular are essential attributes of the international tax system. The current rules for the international allocation of income among States are essentially governed by existing bilateral tax treaties. Tax treaties constitute the fundamental instrument to regulate international fiscal relations between States and aim at eliminating tax obstacles. In that regard, they contribute to an efficient allocation of resources. In addition, the elimination of double taxation or prevention of non-discrimination address equity concerns common to groups of companies.

The fundamental goal of EU law – the Internal Market without barriers – is characterised by the abolition, as between Member States, of obstacles to the free movement. The underlying economic policy is to achieve a free and efficient allocation of resources and identical treatment between domestic and cross-border situations.
EU law, in fact, bears some relation with the purpose of tax groups: neutrality and treating the whole EU area as a single country, just as tax groups aim at treating a group of companies as a single unity.

Chapter 6

Characterization and Requirements to form a Tax Group

6.1 Introduction

For some time, the approach was to treat, for tax (and also legal) purposes, the several entities that were part of a group, as separate and independent entities and not as an organic business unit, structured in different legal entities, but subject to a unitary business strategy aimed at pursuing a common goal. Therefore, they were not considered a single taxable entity. During the years, such approach of taxation has evidenced numerous negative aspects, causing many obstacles when carrying out intra-group transactions. The issue became then, how to determine the proper unit of taxation: meaning how to compute the income of a groups of companies on a consolidated basis rather than separately.

This Chapter starts by providing a definition of tax groups. It then provides an overview of the different methods of group taxation regimes. Finally, an analysis is given of the main features and characteristics associated with the formation and benefits of a tax group.

6.2 Definition of groups from a tax perspective

Corporate tax groups come under special regimes according to which a group of companies meeting certain requirements is assimilated for tax purposes to a single company.[116] They are a demonstration of the principle of the *enterprise approach* and aim at achieving an equalizing effect.[117] In that regard, those regimes provide for a set of rules that allow corporate taxpayers to compute the overall tax liability of the companies which are part of the group on a consolidated or combined basis. There are differences to the extent that the enterprise approach has been applied. Group taxation regimes vary among countries, providing for a higher or lesser degree of consolidation. The term "group taxation regime" is used throughout this thesis on a broad perspective to comprise all regimes which provide special tax rules which allow the transfer of certain tax attributes between the companies of the group.[118]

---

[116] See Antony Ting, "Australia's Consolidation Regime: A Road of No Return?" *British Tax Review* 2 (2010), Thomson Reuters, p. 163.
[117] See B. Wiman, "Equalizing the Income Tax Burden a Group of Companies, 28 *Intertax* 10 (2000), p. 352.
[118] See Y. Matsui, IFA General Report, "Group Taxation", *Cahiers de droit fiscal international*, Vol. 89b, (2004), p. 25.

6.3 Methods of Group Taxation recognition

The adoption of group taxation regimes is a reality in many countries. The recognition of groups for tax purposes may be achieved through the application of different methods and those vary from country to country. Finding an appropriate typology for the classification of the different existing methods is not an easy task. Furthermore, the nomenclature that has been used to classify these methods is not univocal in literature.[119] The starting point is that corporate groups typically aim at achieving two tax goals:[120] (i) allow the offset of profits and losses of group members, and (ii) deferral of gains arising from the intragroup transfer of assets (which may or may not include the transfer of shares in subsidiaries). For the purposes of this thesis, the different methods of group taxation are classified as follows:

6.3.1. Group contribution system

Group contribution systems are adopted by some of the Nordic countries.[121] This system concerns a tax measure where one group member gives another member a contribution through a transfer of the profit from one company to the other. The possibility of consolidation of results within the group occurs by transferring a contribution (a profit) from a profit-making company to a company of the group which carries losses.[122] For that purpose, the income or loss of each member of the group is, in general, first computed on a stand-alone basis. The group contributions are considered tax deductible expenses – although not characterized as payments or transfers as remunerations for good or services[123]- at the level of the contributor and for the recipient's taxable income to be recognized in the year in which the contributions occur. Generally speaking, this scheme allows mitigating the tax liability of the profit making members of the group through the transfer of part of its tax base to loss-making members of such group allowing therefore to achieve an effective intragroup loss offset. Under this regime, each company of the group is treated as a separate and distinct taxpayer for all effects. Differently from the consolidation systems, there is no creation of a single group tax base.

---

[119] See Andrea Parolini, "Cross-Border Group Taxation Regimes: VAT/GST v. Direct Taxation" in Michael Lang (eds.) *Value Added Tax and Direct Taxation: Similarities and Differences*, IBFD (2009), p. 938.

[120] See Y. Matsui, IFA General Report, "Group Taxation", *Cahiers de droit fiscal international*, Vol. 89b, (2004), pp. 31-32.

[121] Being: (i) Finland, see Hannele Ranta-Lassila, IFA Report Finland, "Group Taxation", *Cahiers de droit fiscal international*, Vol. 89b, (2004), pp. 257-267; (ii) Norway, see Harald Hauge, IFA Report Norway, "Group Taxation", *Cahiers de droit fiscal international*, Vol. 89b, (2004), pp. 511-528 and (iii) Sweden, see Bertil Wiman, IFA Report Sweden, "Group Taxation", *Cahiers de droit fiscal international*, Vol. 89b, (2004), pp. 633-648.

[122] Therefore, this system ends up being an indirect method of transferring the losses from one company to the other. See on this Aage Michelsen, IFA General Report "Tax Treatment of Corporate Losses", *Cahiers de droit fiscal international*, Vol. 83b, (1998), p. 53.

[123] See B. Wiman, "Equalizing the Income Tax Burden a Group of Companies", 28 *Intertax* 10 (2000), p. 353.

6.3.2 Group relief system

The group relief system[124] operates by allowing the transfer of the losses from one group member to the other. For that purpose, the income or loss of each member of the group is, in general, first computed on a stand-alone basis and then the losses of a company are transferred to a profit making group member. This system somewhat mirrors the group contribution regime since, contrary to that one where a transfer of profits occurs, in the group relief the tax losses themselves are transferred.
Similar to the group contribution scheme, the group relief system also does not involve the creation of a single group tax base. In that regard, this system has a narrower scope as compared with a true consolidation system. Its goal is essentially to offer a relatively quick and simple mechanism for the utilization of operating losses.

6.3.3 Consolidation

The term consolidation can be used to identify different degrees of corporate group integration for tax purposes. It is possible to distinguish two major types of consolidation[125] schemes: *partial consolidation* and *full consolidation*.
Irrespective of the degree of such integration, the common feature in both cases is that different to group relief and group contribution systems, a group tax base is created:[126] the profits and losses of the members of the group are attributed and combined in one of the members of the group – usually the parent company - allowing as a consequence to offset the profits and losses of each of the group members. The income (or loss) of each of the members of the groups is therefore computed separately and then combined in order to produce a consolidated result which will be the taxable base of the group, typically levied at the level of the parent company as the consolidating member of the group.[127]

---

[124] EU Member States adopting this regime are: UK as well as Ireland and Malta. Other countries include Malaysia, New Zealand and Singapore. For a description based on the UK group relief system see, *inter alia,* Julian Ghosh, "Country Report United Kingdom", in G. Maisto (ed.) *International and EC Tax Aspects of Groups of Companies*, EC and International Tax Law Series, Vol. 4, IBFD (2008), pp. 493-501 or Yash Rupal, IFA Report United Kingdom, "Group Taxation", *Cahiers de droit fiscal international*, Vol. 89b, (2004), pp. 685-706.
[125] When no specific reference is made to the type of consolidation (partial or full consolidation) the term "consolidation" will be used to refer to any of those types.
[126] See I. Mitroyanni, *Integration Approaches to Group Taxation in the European Internal Market*, EUCOTAX Series on European Taxation, Vol. 21, Kluwer Law International, The Hague (2008), p. 123.
[127] See Angelo Nikolakakis, "The Common Law Perspective on the International and EC Aspects of Groups of Companies", in G. Maisto (ed.) *International and EC Tax Aspects of Groups of Companies*, EC and International Tax Law Series, Vol. 4, IBFD (2008), pp. 30-31.

6.3.3.1 Partial Consolidation

6.3.3.1.1 Pooling

The pooling regime under a partial consolidation system is also common among EU Member States.[128] It operates through the aggregation (sum) of the results of each of the companies which belong to the group, generally, as referred, at the level of the parent member of the group, allowing therefore to achieve the intragroup offset of profits and losses. In this case, there is no full consolidation under the classification adopted since one of the typical attributes of group taxation regimes is not present: intra-group transfers of assets do not benefit from deferral and give rise to immediate taxation.

6.3.3.1.2 Organschaft

The *Organschaft*[129] is the group taxation regime adopted in Germany.[130] The underlying concept of this regime is that the corporate members controlled by a common parent company are deemed to be "inner bodies of the parent". They are treated as if they become the hands and feet of "one living creature".[131]Also in the *Organschaft* there is no deferral of gains/losses arising from intra-group transfers. Accordingly, the effects are limited to the intragroup offsetting of losses by means of transferring the income or losses of the subsidiaries to the parent company. Due to the particularities of this system, it is often argued[132] that this model stands between consolidation (in the sense that aggregates the

[128] Namely the case of:

(a) Italy, see Fabrizio Bendotti, "Country Report Italy", in G. Maisto (ed.) *International and EC Tax Aspects of Groups of Companies*, EC and International Tax Law Series, Vol. 4, IBFD (2008), pp. 327-362 or Massimo Giaconia, IFA Report Italy, "Group Taxation", *Cahiers de droit fiscal international*, Vol. 89b, (2004), pp. 369-388.

(b) Luxembourg, see René Betjens, IFA Report Luxembourg, "Group Taxation", *Cahiers de droit fiscal international*, Vol. 89b, (2004), pp. 427-440.

(c) Portugal, see Maria dos Prazeres Lousa, IFA Report Portugal, "Group Taxation", *Cahiers de droit fiscal international*, Vol. 89b, (2004), pp. 547-564.

[129] It was also the system in Austria which was in force until 2004.

[130] See Simon Patrick Link, "Country Report Germany", in G. Maisto (ed.) *International and EC Tax Aspects of Groups of Companies*, EC and International Tax Law Series, Vol. 4, IBFD (2008), pp. 301-326.

[131] See Y. Matsui, IFA General Report, "Group Taxation", *Cahiers de droit fiscal international*, Vol. 89b, (2004), p. 29.

[132] See EU Commission "Common Consolidated Corporate Tax Base Working Group (CCCTB WG) – Issues related to group taxation" *Working Document CCCTB\WP\035\doc\en* (5 May 2006), paragraph 30. An example of this somewhat hybrid nature of this regime may be illustrated by the different references found in literature. In this regard, see Y. Matsui IFA General Report, "Group Taxation", *Cahiers de droit fiscal international*, Vol. 89b, (2004), p. 31 who states that the current version of the *Organschaft* could be viewed as a subset of the broader "consolidation" model" or Andrea Parolini, "Cross-Border Group Taxation Regimes: VAT/GST v. Direct Taxation" in Michael Lang (eds.) *Value Added Tax and Direct Taxation: Similarities and Differences*, IBFD (2009), p. 939, footnote 18 stating that in essence, the *Organschaft* shows several similarities to the Scandinavian group contribution systems.

profits and losses of group members) and a group relief/contribution model (as it operates by a transfer of income or losses).

6.3.3.2 Full consolidation

The full consolidation system follows a higher degree of integration by gathering the two main tax attributes of a group taxation regime. In that regard, it generally treats corporate groups as a single entity, although again there is some variation in the extent to which this single entity concept is applied.[133]

6.3.3.2.1 Pooling

The pooling system under a regime of full consolidation (also referred to[134] as consolidation of separate units) is also a common solution among EU Member States.[135] Its main features are that the parent company and its subsidiaries are treated, to a large extent, as separate entities for income tax purposes, with the taxable income (or loss) of each group member being computed on an individual basis. The separate entity results are then aggregated at the group level (typically with adjustments for intragroup transactions) to determine the consolidated tax base of the group. This regime combines the entity approach with the enterprise approach: each company is treated as a separate taxpayer for the purposes of determining the respective taxable income. The enterprise approach is followed in a later (and separate) step, in which the results of all the group members are pooled in order to determine the consolidated base. The main advantage of this regime is simplicity, as most of the rules are determined under the general principle of one company one taxpayer.

---

[133] Antony Ting, "The Unthinkable Policy Option?" 59 *Canadian Tax Journal* 3 (2011) p. 432.

[134] See Angelo Nikolakakis, "The common law perspective on the International and EC aspects of groups of companies", in G. Maisto (ed.) *International and EC Tax Aspects of Groups of Companies*, EC and International Tax Law Series, Vol. 4, IBFD (2008), pp. 31-32.

[135] Namely the case of:

(a) Austria, see Florian Brugger, "Country Report Austria", in G. Maisto (ed.) *International and EC Tax Aspects of Groups of Companies*, EC and International Tax Law Series, Vol. 4, IBFD (2008), pp. 175-208;

(b) France, See Nicolas Message, "Country Report France", in G. Maisto (ed.) *International and EC Tax Aspects of Groups of Companies*, EC and International Tax Law Series, Vol. 4, IBFD (2008), pp. 277-300 or José André Borrat and Alain Bassiére, IFA Report France, "Group Taxation", *Cahiers de droit fiscal international*, Vol. 89b, (2004), pp. 271-288;

(c) Spain, see Emilio Cencerrado Millán, "Country Report Spain", in G. Maisto (ed.) *International and EC Tax Aspects of Groups of Companies*, EC and International Tax Law Series, Vol. 4, IBFD (2008), pp. 445-492, María Garcia Amparo Ruiz, IFA Spain Report, "Group Taxation", *Cahiers de droit fiscal international*, Vol. 89b, (2004), pp. 609-629 or Javier Saez de Olazagoitea, *La tributación Consolidada de Los Grupos de Sociedades: Regimen Vigente y un Modelo para su Reforma*, Arazandi 2002.

6.3.3.2.2 Attribution

The attribution system is adopted by the Netherlands. As a full consolidation regime, under the *fiscale eenheid* (fiscal unity)[136] all the companies belonging to the group are effectively treated as a single economic unit. There is no separate profit determination of the participating companies. This means that as part of the fiscal unity the groups of companies will be taxed as a single taxpayer would exist. The main difference in this case, is that all assets and liabilities of the subsidiaries are allocated to the parent company of the group. Therefore, the computation of the whole of the results of the tax group (profits/losses) are attributed to the parent company. Before 1 January 2003, the fiscal unity followed an absorption system[137] as all the subsidiaries were treated as if they had been absorbed by the parent company. This had consequences, namely, as concerned the possibility of the subsidiaries claiming tax treaty entitlement. Since they were completely disregarded for tax purposes, it was arguable that they would not meet the liability to tax standard under Article 4 of tax treaties. The relevant amendments, with effect from 1 January 2003,[138] led to the change to an attribution system which now makes clear that all the members of the group remain as separate taxable entities,[139] namely for the purposes of claiming treaty benefits.

6.3.3.2.3 Absorption

The absorption system of full consolidation is currently only adopted in Australia[140] and represents the strongest application of the enterprise approach for tax purposes.[141] The single entity concept – referred to as the single entity rule (SER) – is expressly provided in the tax law. All subsidiary members of the group are treated as parts (divisions) of the

[136] See Pieter van der Vegt, "Country Report Netherlands", in G. Maisto (ed.) *International and EC Tax Aspects of Groups of Companies*, EC and International Tax Law Series, Vol. 4, IBFD (2008), pp. 363-422, J. Muller, *The Netherlands in International Tax Planning*, Online Books IBFD (accessed on 25 September 2011), Rudolf J. de Vries, IFA Netherlands Report, "Group Taxation", *Cahiers de droit fiscal international*, Vol. 89b, (2004), pp. 461-484.

[137] See *inter alia the* decisions of the Netherlands Supreme Court in *BNB* 1988/220 of 27 April 1988 or *BNB* 1998/47 of 13 November 1996.

[138] See Decree no. CPP 2003/1917M, of 23 October 2003.

[139] The main difference of the absorption system is that under the previous legislation, the participating subsidiaries of the group would also lose their personal tax liability to tax. See in this regard Jan van der Streek, "The CCCTB Concept of Consolidation and the Rules on Entering a Group", 40 *Intertax* 1 (2012), pp. 27, footnote 10.

[140] See Antony Ting, "Australia's Consolidation Regime: A Road of No Return?" *British Tax Review* 2 (2010) pp. 162-193.

[141] See Antony Ting, "Policy and membership requirements for consolidation: a comparison between Australia, New Zealand and the US?" *British Tax Review* 3 (2005) p. 315, who states that Australia pushes the single entity approach to the extreme. Not only is a consolidated group treated as a single company but also the whole group is in fact treated as an "inflated" version of the head company.

parent company[142] rather than separate entities. Therefore, subsidiaries are deemed to have ceased to exist as individual companies for tax purposes and become divisions of the parent company. As a consequence, the assets of subsidiaries are deemed to be held directly by the parent company. Intra group transfers of assets are completely ignored, meaning that not only are there no tax implications but also there is no requirement to trace assets movements, keep records of deferred gains/losses or to recapture the gains or losses when either the transferor or transferee leaves the group.

6.4 Personal Scope

6.4.1 Group perimeter

A fundamental distinction in tax groups is its scope which may be purely domestic or cross-border. Ideally, group taxation would require the inclusion of all entities, regardless of their jurisdictions of residence. However, as a rule States do not provide for a cross-border group taxation regime. In fact, if a group taxation regime exits under the respective tax laws, it is only allowed to the extent that the group of qualifying companies are resident taxpayers in the respective State. In some instances, the inclusion of foreign companies is possible but still limited to the situation where those foreign companies are subject to corporate income tax in the respective jurisdiction applying the group taxation regime due to the fact that the foreign companies have a permanent establishment in such jurisdiction and the participation in the underlying group foreign company is effectively attributed to that permanent establishment.

If the majority of States that have group taxation regimes follow a pure national perimeter, even the very few[143] (Austria, Denmark and Italy) that allow the possibility to apply a worldwide regime have adopted cross-border group taxation regimes which are different[144] to the domestic ones. Typically, the international group taxation regimes are regulated by a set of stricter provisions which depart from those applicable in a domestic context.[145] Indeed, in most cases - Denmark and Italy[146] - the cross-border regime exists in parallel

[142] Also referred to as a single unit consolidation. See Angelo Nikolakakis, "The common law perspective on the International and EC aspects of groups of companies", in G. Maisto (ed.) *International and EC Tax Aspects of Groups of Companies*, EC and International Tax Law Series, Vol. 4, IBFD (2008), p. 29.

[143] France also had a cross-border group taxation regime: the worldwide consolidation regime (WCR – *régime du benefice consolidé*) which was abolished with effect from 6 September 2011 by Article 3 of *Loi no. 2011-1117*, of 19 September 2011.

[144] For instance, in the case of Italy (and the former French WCR), the parent company of the cross-border group must necessarily be a tax resident in the respective jurisdiction which applies such regime and may not be a permanent establishment of a foreign company .

[145] See Andrea Parolini, "Cross-Border Group Taxation Regimes: VAT/GST v. Direct Taxation" in Michael Lang et al. (eds.) *Value Added Tax and Direct Taxation: Similarities and Differences*, IBFD (2009), pp. 943-944.

[146] And, previously, in the case of France, which had the domestic consolidation regime (RIF – *régime d'intégration fiscale*) and the WCR.

with the domestic one not being a mere extension of this. In accordance, Denmark[147] has the national joint taxation and the international joint taxation regimes dependent on whether the perimeter of the group is purely domestic or has a cross border dimension. Also in Italy, one regime is applicable to domestic groups and a different one to cross border groups. In the case of Austria, there is a single group taxation system that applies both on a domestic and cross-border basis extending its application, depending on the group perimeter. However, also the Austrian regime presents differences between a domestic and cross-border scenario.[148] In the case of the UK (and Ireland) there is a limited cross-border element, as foreign losses may be taken into account against the profits of a UK parent company under the group relief system, provided that those losses cannot be deducted at the level of the subsidiary where they originated or elsewhere in the EU/EEA area.

A common feature of all these systems that apply on a cross-border basis is the need to re-calculate the tax base of the foreign entity in accordance with the tax rules of the Member State which applies the tax group regime, that is, where the parent company of the group is located.

6.4.2 Eligible entities

Strictly connected with the scope of tax group is the requirement of the entities that may qualify to become group members. Many States, besides excluding non-resident companies, exclude certain entities from the group perimeter. In this regard, unincorporated entities (apart from PEs) are frequently excluded[149] as well as certain companies that are not subject to the general corporate income tax rates[150] (either because they are exempt or subject to special rates).

Considering the tax group's structure, the analysis should consider first the entities that may qualify as parent company of the group and the ones as subsidiaries.
As most tax group regimes apply only within a domestic context, parent members of the group are, as a general rule, companies that are resident in the EU Member State of the respective tax group regime. In most of the cases, the residence requirement is satisfied by any valid criteria under the domestic law or tax treaties entered into by such Member State (notably the place of effective management criterion), it not being required that the

[147] See for an analysis, Arne Mollin Ottosen and Michael Norremark, "Denmark: Joint Taxation", in Dennis Weber and Bruno da Silva (eds.), *From Marks & Spencer to X Holding: The future of cross-border group taxation*, EUCOTAX Series on European Taxation Vol, 29, (2011), Kluwer Law International BV, The Netherlands, pp. 153-160 or N. Bjornholm & A. Oreby Hansen, *Denmark in International Tax Planning*, Online Books IBFD (accessed on 24 November 2011).
[148] Namely as regards the income computation and the personal scope in regard to the limitation of the foreign subsidiaries which can be included in the group perimeter.
[149] E.g. in Denmark, the rules on the national joint taxation do not apply to entities that are considered transparent for Danish tax purposes, such as general or limited partnerships.
[150] E.g. Portugal and Spain.

company is also established in that Member State. However, in one case or the other, the parent company must not only be resident, it must also be established in that Member State (either by reference to statutory seat or place of incorporation).
In many Member States (although not all)[151] PEs of a foreign (non-resident) company may also act as parent members provided that the shares in the members of the group are effectively attributable to such PE and the respective head office is either a company resident in a country with a tax treaty in force with the relevant Member State, or qualifies under the Parent-Subsidiary Directive, or is located in the European Economic Area ("EEA"). It some limited cases[152] it may possible that partnerships and associations act as parent group members, provided that the respective partners or members are considered as qualifying entities.

Another limitation that it is possible to find[153] when defining the qualifying parent entities, is that a parent company of a group cannot be owned (that is, be a subsidiary) by another domestic company that would otherwise qualify as a parent group company. Such limitation does not apply in the case the parent company is a subsidiary of a foreign company.

For those EU Member States which provide for both a domestic and a cross-border tax regime, once again some interesting features can be found. In Italy, the parent company of a cross-border group has to be a company resident for tax purposes in Italy.[154] This means that unlike the domestic tax group, the parent member cannot be an Italian PE of a foreign group (even if it is resident of another EU Member State). An identical regime applies in the case of the Danish international joint taxation regime.[155]

Similarly, subsidiaries of the group are generally companies which are resident in the State of the respective tax group regime. Usually the residence requirement is also satisfied by any valid criteria under the domestic law or tax treaties entered into by such Member State (notably the place of effective management criterion). It is not usually required that the company is established in that Member State. However, in one case or the other, the subsidiary must not only be resident, it must also be established in that Member State (either by reference to statutory seat or place of incorporation).[156] The attitude of countries towards the inclusion of domestic PEs from foreign companies varies considerably[157] but

[151] E.g. Portugal.
[152] E.g. Austria
[153] E.g. Portugal.
[154] Previously, in the case of France and although there was no such legal limitation in a cross-border tax group, in practice, there was no notice of the application of the WCR with a permanent establishment as a parent group member.
[155] Although in this case the reason is due to the all in all out principle which the head office of the permanent establishment must also be included within the group perimeter.
[156] E.g. Portugal, Germany.
[157] E.g. The Netherlands.

every State allowing such inclusion admits the possibility of including exclusively the tax results of the domestic PE. Interestingly, the fact that both Austria and Italy, although providing for cross-border tax group regimes, do not allow the inclusion of PEs as group members in those cases.

As concerns the inclusion of foreign PEs of domestic companies, the inclusion is mainly driven by the method adopted to avoid double taxation: credit countries normally do not require carving out the tax results of the foreign PEs while the opposite typically succeeds in case of exemption countries.[158]

Another difference between domestic and cross-border tax regimes within the same Member State is revealed in Austria: its cross-border tax group regime allows foreign companies to be part of the group but only in case they are (directly) affiliated. In other words in cross-border scenario: only foreign subsidiaries that are directly owned by Austrian companies (first-tier foreign subsidiaries). Therefore second-tier foreign subsidiaries cannot be included within the group perimeter.[159]

Based on the above it is possible to draw some conclusions regarding the perimeter limitation of group taxation regimes. The following situations[160] describe scenarios that are frequently not available due to the presence of some cross-border element:

a) the inclusion of a parent company or a subsidiary which is a resident outside the respective tax jurisdiction ("foreign group company");

b) the inclusion of a parent company or a subsidiary which is a resident outside the respective tax jurisdiction ("foreign group company") where the foreign company does not have a permanent establishment located in the jurisdiction of the group taxation regime to which the participation in the tax resident company is effectively connected;

c) the inclusion within the group perimeter of a resident sub-subsidiary company where the intermediary shareholder is a company that has its tax residence outside the respective tax jurisdiction (the so-called "sandwich situation");

d) the inclusion within the group perimeter of a resident sub-subsidiary company where the intermediary shareholder is a company that has its tax residence outside

[158] Although in this case it may be possible find some State that allows, under certain conditions, the deduction of the foreign permanent establishment losses.
[159] See Robert Schneider, "Group Taxation Regime: A Landmark Model", *Derivatives & Financial Instruments* 5/6 IBFD (2006), pp. 118-128, or Gerald Gahleitner and Stefan Ratzinger, "International Group Taxation: An Overview's of Austria New Tax Incentive", *European Taxation* 11 IBFD (2005), pp. 509-514.
[160] See Maarten F. de Wilde, "A Step Towards a Fair Corporate Taxation of Groups in the Emerging Global Market", 39 *Intertax* 2 (2011), pp. 74-75.

the respective tax jurisdiction ("sandwich situation") and the intermediary foreign company does not have a permanent establishment located in the jurisdiction of the group taxation regime to which the participation in the tax resident company is effectively connected;

e) the inclusion within the group perimeter of same-tier resident taxpayer groups of companies ("sister companies") where the common parent company has its tax residence outside the respective tax jurisdiction;

f) the inclusion within the group perimeter of same-tier resident taxpayer groups of companies ("sister companies") where the common parent company has its tax residence outside the respective tax jurisdiction and the foreign parent company does not have a PE located in the jurisdiction of the group taxation regime to which the participation in the tax resident companies is effectively connected.

6.5 Regime and members' election

6.5.1 Regime election

In the majority of States, the decision on entering into the group taxation regime is elective, that is, it has a possibility to choose to benefit or not from such regime. The exception to the option to elect the regime is the case of Denmark, where it is mandatory. In fact, under the national joint taxation, all the entities that meet the requirements are automatically included (that is, they are subject to the mandatory joined taxation without electing for the regime to apply). However and contrary to the national group taxation regime previously described, the Danish international joint taxation regime is elective and also subject to submitting a request to the tax authorities.

Also in Italy, the application of the consolidation regime is conditional upon a preliminary ruling by the tax authorities.

6.5.2 Members' election

A more common issue of electivity under the group taxation regimes concerns the possibility to choose the members of group. This is, whether the inclusion in the group of all legal entities which meet the tax group requirements is mandatory (the so-called "*all in all out*" principle) or it is possible to elect which entities will become group members (so-called "*cherry picking*"). The difference between cherry-picking and the all-in all-out principle may be less relevant if it is relatively easy to adjust the shareholding participation without relevant costs, notably by a purchase or sale of the shares in order to include or

exclude a group member.[161] The issue arises, however, because Member States typically have restrictions on the exit of a member of the group (for example, a minimum life span of the group) or on entry of a new member. In this last regard, the typical feature is to require a minimum holding period to be kept by the parent group member, before such a new member can be included in the group.

The solutions adopted depend on the jurisdiction at stake. Nevertheless, there are some interesting differences in some EU Member States which provide for both domestic and cross-border group regimes. In the case of Italy, and unlike its domestic tax group regime which allows cherry-picking, under the cross-border tax group regime, all the foreign entities must be included in the group.[162] Therefore, the cross-border group's perimeter cannot be freely determined, which is a different solution from the one provided in a domestic scenario.
Differently, in Denmark, both the national and international joint taxation regimes provide for the same solution by applying the all in all out principle to all entities meeting the requirements.

In the end, the diversity of policy choices reflects the existence of conflicting objectives.[163] On the one hand, the all in all out rule serves as an anti-abuse objective[164] by requiring that when electing for a group taxation regime, all eligible members of the corporate group must be included; on the other, allowing cherry-picking provides flexibility of treatment.

6.6 Degree of income aggregation

An issue where some differences arise among Member States is the degree of aggregation of income. There are two possible alternatives: (i) aggregation applies in *direct proportion* to the shareholding, or (ii) *full aggregation* (that is, all profits and losses irrespective of the effective shareholding held by the parent company).
In all domestic group taxation regimes, the results are fully aggregated irrespective of the level of participation in the subsidiaries. However, it is relevant to highlight the existing differences regarding those Member States which provide for a domestic and a cross-border regime (or which the existing group taxation regime applies also on a cross-border basis).

---

[161] See Y. Matsui, IFA General Report, "Group Taxation", *Cahiers de droit fiscal international*, Vol. 89b, (2004), p.39.
[162] Previously, this was also the case in France. It is possible to elect that the companies be included in the RIF, but not in the case of WCR in which the all in all out principle applies.
[163] See Antony Ting, "The Unthinkable Policy Option?" 59 *Canadian Tax Journal* 3 (2011) p. 440.
[164] A clear example is the case of Denmark. Until the amendment of the Danish join taxation rules, it was not required for all Danish or foreign subsidiaries to be included in the group. However, the Ministry of Finance considered that certain groups were abusing this possibility by cherry-picking only the unprofitable subsidiaries while leaving out the profitable companies in order to reduce the overall Danish taxation. See on this, Arne Mollin Ottosen and Michael Norremark, "Denmark: Joint Taxation", in Dennis Weber and Bruno da Silva (eds.), *From Marks & Spencer to X Holding: The future of cross-border group taxation*, EUCOTAX Series on European Taxation Vol. 29, (2011), Kluwer Law International BV, The Netherlands, pp. 153-154.

In this latter case, the situation seems to be that the aggregation of income only occurs to the extent that the group member is controlled by the parent company of the group, that is, there is proportional aggregation. This is the case of Italy,[165] where the results of the tax group companies are fully aggregated at the group level in the case of the domestic group taxation regime, but only in proportion to the voting rights held directly and indirectly by the parent company in the cross-border regime. Also Austria, although with a singular tax group regime applicable either on a domestic and cross-border basis provides for a differentiation: for domestic group members, again all profits and losses are attributed to the group parent regardless of the percentage of the participation in the capital. In contrast, regarding foreign group members, only the losses (and not the profits) are attributed to the parent member of the group but in this case only in the proportion to the interest held in the foreign company.

Therefore, there seems to be a trend to adopt different solutions[166] depending on whether the regime is being applied on a mere national or rather an international perspective.

Differently is the case of Denmark, where also under the international joint taxation regime, the full results of the companies are consolidated irrespective of the participation threshold.

6.7 Participation and Control requirements

The inclusion of a member in a tax group is dependent on the degree of influence or control that the parent company has on its subsidiaries. In determining whether a company meets the required control threshold, one of the first issues to be addressed is what is the definition of ownership for purposes of determining the existence or not of control for the purpose of being part of the tax group. Typically, group regimes require high thresholds which aim at ensuring that the group members are effectively integrated, that is, that they do indeed form a single economic entity. The determination of control may be measured by two criteria:[167] (i) legal control which is based on the factors which grant legal power of decision making, and (ii) economic control that considers the effective impact on the most important decisions of a business undertaking.

It is possible to find a range of approaches available in determining ownership for the purposes of group election membership.

---

[165] It was previously also the case of France, where full aggregation occurred at the group level in the case of the domestic RIF, but only in proportion to the voting rights held directly and indirectly by the parent company in the case of the cross-border WCR.

[166] See EU Commission "Common Consolidated Corporate Tax Base Working Group (CCCTB WG) – Issues related to group taxation" *Working Document CCCTB\WP\035\doc\en* (5 May 2006), paragraph 31.

[167] See Frans Vanistendael, "Group Taxation under domestic law: Common Law versus Civil Law countries", in G. Maisto (ed.) *International and EC Tax Aspects of Groups of Companies*, EC and International Tax Law Series, Vol. 4, IBFD (2008), p.73.

For some tax group regimes, ownership is defined exclusively based on simple criteria. One alternative is merely to look at the percentage of participation in the capital of the dependent company, that is, legal ownership (for example, Spain). The volume of shares held directly (or indirectly) by the parent company in their subsidiaries expresses the degree of control exercised over their activities and the inherent economic integration. The property rights, which are attached to the respective shares, therefore, provide the powers to control the companies' business activities. This criterion has the advantage of being easy to administrate. But the number of shares is considered in many cases to provide a simple but unclear indication of the level of control exercised over the companies' activities. The power of the parent company over its subsidiaries may not have a precise matching with the number of shares held as it is possible to establish different types of property rights.[168] In fact, shares may or may not include control rights (such as voting rights or rights to receive information). At the same time, ownership of shares becomes permissible for avoidance schemes and therefore, it is frequent to adopt supplementary tests or anti-avoidance provisions. Thus, in some States, other criteria should be considered together or as an alternative to participation in capital. A simple tally of voting rights may be an alternative approach. In some Member States (for example, Denmark) voting rights are indeed treated as an alternative criterion (also known as "votes-or-value ownership test"): as long as the parent company holds either the majority of participation or votes to the effect that actually has a deciding influence regarding the management of the subsidiary's operational and financial situation, such subsidiary becomes part of the group. It is also possible to opt for a combined approach of both criteria: the need to also have, together with the relevant participation, the majority of voting rights (for example, Austria, France, Germany, Portugal); or also the requirement of the parent company to hold a certain threshold participation of both legal and economic ownership (for example, Austria, France and Netherlands), this latter concept being defined as the parent member of the group being entitled to the equity and profit of the subsidiary.
Another solution is to move towards a more economically integrated approach and attempt to cast the widest possible net for group membership. The underlying premise is that the percentage of participation in fact may be irrelevant in ascertaining the existence of economic integration between the related companies. The problem in this case is that a *de facto* control is leads to uncertainty.[169]

It is also possible to find rules which provide for an expanded definition of control[170] and which place relevance on economic control. It that regard, some States (for example,

[168] See Antony Ting, "Ownership of Companies and the Definition of 'Control' under the Consolidation and Controlled Foreign Company Regimes: A Comparison between Australia, New Zealand and the US", 12 *New Zealand Journal of Taxation Law and Policy* 1 (2006), p. 38.
[169] See Brian J. Arnold, "The Taxation of Controlled Foreign Corporations: An International Comparison", *Canadian Tax Paper* 78 (1986), p. 417.
[170] See Maureen Donnelly and Allister W. Young, "Group Relief for Canadian Corporate Taxpayers – At Last?", 59 *Canadian Tax Journal* 2 (2011), p. 248.

Denmark) provide that a *de facto* control[171] is sufficient, meaning that a parent company with less than 50% of the voting rights or shares but which has a decisive influence over the subsidiaries will still form a tax group. Or even rules on deemed ownership by way of intermediaries, options and rights of aggregation of the share ownership of all related persons. The relevance is then placed on a *de facto* influence[172] on the companies' activities.
Again there are relevant differences in those Member States which have both a domestic and a cross-border tax group regime: in the case of Italy, the requirement under the cross-border tax group is the legal ownership of the majority of the voting rights, capital and rights to the profit of the subsidiary, whereas in relation to the domestic tax group regime, such a requirement has to be met only from a legal perspective, regardless of the economic influence actually exercised over the subsidiary.

In regard to the relevant participation threshold, for being part of the tax group, such varies among States from a threshold of at least 50% to 95%.
The minimum percentage is usually calculated by taking into account the shareholdings held directly or indirectly by the parent in the subsidiary. In the case of indirect participation, the percentage is typically computed by multiplying controlling stakes (that is, applying on a *pro rata* basis). In the case the parent company holds both a direct and indirect participation, those should be added together in order to calculate the overall participation.

In some cases, however, differences apply depending on whether the intermediary company is a resident or a non-resident company. For instance, in the case of France and Italy, if the subsidiary is participated in indirectly through an intermediate resident company, the application of the pro-rata basis only applies under the cross-border tax group regime. This means that under the domestic regime, as long as the parent of the group holds the minimum required participation, such participation will be considered as being 100% for the purpose of determining the interest in the sub-subsidiaries. In other words, in computing an indirect ownership link, the subsidiaries with a participation of 95% in the case of France and 70% in the case of Italy is deemed to be 100% owned. This means that if the subsidiary, in turn, holds 95% or 70% of the sub-subsidiary, it will qualify for inclusion in a domestic tax group of France and Italy respectively.

---

[171] There are several factors to assess the existing of de *facto control* such as:
a) effective power over the majority of voting rights by virtue of an agreement with other shareholders;
b) effective power to govern the financial and operating policies of the entity;
c) effective power to appoint or remove the majority of the members of the board of directors;
d) effective power to cast the majority of votes.

[172] See Maarten F. de Wilde, A Step Towards a Fair Corporate Taxation of Groups in the Emerging Global Market", 39 *Intertax* 2, p. 79. The reason is because in all those cases and from a business economic perspective, there is no difference between operating a business through a branch or through a separate controlled enterprise.

As a consequence of the CJ case-law,[173] some (but not all) Member States' domestic tax group regimes are starting to allow forming a tax group between a parent company and an indirect subsidiary whilst before, the fact that a direct subsidiary was a non-resident company would preclude the formation of a group.
Differently but somehow reaching to a similar effect is the case of Austria: while in a pure domestic situation second-tier and even lower tier companies can be included in a tax group as long as they meet the participation threshold requirements, in the case of foreign subsidiaries only the first-tier companies may be included, thus it is not possible for the remaining lower tier subsidiaries to be included in the tax group.

6.8 Substantive effects

Corporate groups aim, in general, to achieve two main tax objectives: to obtain the net results of the overall group by offsetting profits and losses of its members and defer the recognition of gains which arise from the transfer of assets between the members within a group.[174] However, as may be seen from the analysis in 6.3 above, if all the tax group regimes allow the offsetting of losses and profits, only some of those regimes deal with intra-group transfers and, if they do so, in many cases only with limited scope. In that regard, the substantive effects with the identification of the advantages and disadvantages of a tax group is something which is inherent to the tax group system under analysis. Depending on the model at stake (consolidation, pooling, group contribution or group relief), or perimeter (domestic or cross-border group) the effects and, consequently, the advantages and disadvantages may vary. That being said, I will enumerate below the advantages and disadvantages which are typically linked to tax group regimes irrespective of the fact that, depending of the specific model or perimeter, such advantages or disadvantages may or not be present.

6.8.1 The Advantages

6.8.1.1 Use of losses

In general, the possibility to use losses improves the neutrality of the tax systems and is also in accordance with the principles of ability to pay and net basis taxation. Although tax systems impose limitation on the utilisation of losses for tax purposes, most States to some

[173] See cases ECJ 27 November 2008, C-418/07 *Société Papillon v Ministére du Budget, des Comptes Publics et de la Fonction Publique*, and CJ 12 June 2014, Joined cases C-39/13, C-40/13 and C-41/13 *Inspecteur van de Belastingdienst Noord/kantoor Groningen v SCA Group Holding BV (C-39/13), X AG, X1 Holding GmbH, X2 Holding GmbH, X3 Holding BV, D1 BV, D2 BV, D3 BV, v Inspecteur van de Belastingdienst Amsterdam (C-40/13) and Inspecteur van de Belastingdienst Holland- Noord/kantoor Zaandam v MSA International Holdings BV, MSA Nederland BV (C-41/13)*, further analysed *infra* in Part IV of this thesis.
[174] See Y. Matsui, IFA General Report, "Group Taxation", *Cahiers de droit fiscal international*, Vol. 89b, (2004), p. 33.

extent allow for losses to be offset against:[175] (i) income derived by the same entities across taxable periods, and (ii) through different legal entities.

In the first case, this is achieved through loss carry-over. This may occur by allowing loss carry-back, which means the possibility of a company offsetting losses against preceding years' income and/or loss carry-forward that allows the use of previously incurred losses against subsequent years' income. In practice, most States do not[176] provide for loss carry-back but the majority grants the possibility of carry-forward losses.[177] Nevertheless, time-limitations are introduced regarding carry-forwards.
In addition, the loss carry-over rules in most States are subject to further restrictions related to:[178] the change of ownership or activity of the entity claiming the loss relief, total discontinuance of the company's activities and a basic change in the company's purpose and real activities. Those restrictions, although subject to some exceptions (e.g. lack of tax avoidance motives, internal reorganisations) are aimed at tackling tax planning schemes on losses.

The second case, regards one of the most common advantages related to group taxation regimes. The fact that the companies that belong to a group taxation regime may aggregate the respective profits and losses allows achieving tax efficiency essentially due to the possibility to offset losses incurred by the group companies against profits derived by other of the group companies. The possibility of one taxpayer to deduct losses incurred by other taxpayer corresponds with an indirect loss equalization.[179] Naturally, this advantage is further increased if it is possible to form groups on a cross-border basis. However, as stated, the majority of States do not have a cross border group taxation regime which allows for the losses of foreign subsidiaries to be taken into consideration[180] insofar as an election for the application of the regime has been made. Notwithstanding, some States which do not allow for cross-border groups (Ireland, Sweden and United Kingdom) expressly allow for the

[175] See OECD Report on *Corporate Loss Utilisation Through Aggressive Tax Planning* (2011), pp. 26-27.
[176] Reasons for most countries not to permit loss carry-back relate to revenue reasons as it may cause difficulties if a substantial number of taxpayers would claim tax refunds as well as administrative consideration due to the need to re-open previous years' assessments. See Aage Michelsen, IFA General Report "Tax Treatment of Corporate Losses", *Cahiers de droit fiscal international*, Vol. 83b, (1998), pp. 30-32.
[177] See Aage Michelsen, IFA General Report "Tax Treatment of Corporate Losses" *Cahiers de droit fiscal international*, Vol. 83b, (1998), pp. 27-30.
[178] See OECD Report on *Corporate Loss Utilisation Through Aggressive Tax Planning* (2011), p. 27 and Aage Michelsen, IFA General Report "Tax Treatment of Corporate Losses", *Cahiers de droit fiscal international*, Vol. 83b, (1998), pp. 34-38.
[179] Since two companies correspond to two different taxpayers, a direct loss equalization (as in the case of head office / PE) is not possible. See on this, Axel Cordewener et al., "The Tax Treatment of Foreign Losses: Ritter, M&S and the Way Ahead (Part One)", *European Taxation* 4, IBFD (2004), p. 138.
[180] Although an indirect loss equalization may occur by virtue of the losses suffered by the subsidiary lead to a decrease in value of the respective parent company's participation. In that regard, the foreign losses are not taken into account in the residence State of the parent company but they are indirectly considered because they give rise to a loss value in the participation in the subsidiary.

deduction of losses incurred by a foreign subsidiary resident in an EU/EEA country when those losses cannot be offset anywhere else in the EU/EEA.

The tax efficiency referred to above is also one of the main reasons why the formation of a group in many types is used as a tax planning technique for cases such as:[181]

- *Leveraged buy-out transactions allowing "debt push down" in the case of an acquisition of a subsidiary* - The third-party debt (typically interest due to a bank loan) taken up by the parent company to acquire the shares in the subsidiary, can be offset against profits of the subsidiary after forming a Tax Group. This allows the subsidiary to effectively finance its own acquisition;
- *Use of hybrid structures* - If a foreign company provides a loan to its tax transparent subsidiary, which subsidiary is treated as a taxable entity from the tax perspective of its State of residence and such entity is part of a domestic Tax Group, the interest paid by this entity can be deducted from the Tax Group result, whereas no interest is received by the foreign company.
- *Use of permanent establishments as parent companies of tax groups* - If the permanent establishment takes a third-party debt (being the debt attributable to the permanent establishment) it is possible to achieve a double-dipping situation if the head office is located in a State which applies the credit method, that is, a loss relief both at the level of the permanent establishment and the head office.

These possibilities to use losses within a group are strictly related to the mechanisms that group taxation regimes have adopted to avoid "loss shopping".

6.8.1.2 Intra-group transactions

Another preeminent advantage is the minimization of tax costs related to intra-group transactions, since in many tax group models, the transactions between group members are disregarded for tax purposes as described more extensively below.

6.8.1.2.1 Assets

It is relevant to distinguish three different moments in regard to the intra-group transfer of assets: (i) on entry; (ii) during the group taxation; and (iii) on exit

- ***On entry*** – There are three possible alternatives[182] regarding the treatment of intra-group transfers of assets[183] on entry into a consolidated group: (i) *rollover,* (ii) *mark-to-market,* and (iii) *cost base reset*.

[181] For an overview of the multiple possibilities of loss-shopping see OECD Report on *Corporate Loss Utilisation Through Aggressive Tax Planning* (2011).
[182] See Antony Ting, "The Unthinkable Policy Option?" 59 *Canadian Tax Journal* 3 (2011) pp. 445-449.

The first alternative[184] does not trigger any immediate tax consequences[185] for the assets of the group members which enter into a tax group. The roll over is achieved since the assets are valuated at their original cost base. The whole amount of the gain or loss from a subsequent disposal of the assets (including the amount attributable to the pre-consolidation period) is attributable to the tax group.[186]
The mark-to-market approach gives rise to the opposite result: the assets are deemed to have been transferred to the group and any unrealized gains or losses on the assets before entry are immediately recognised at the respective market value and trigger the corresponding taxation.
Finally the *cost base reset* is an exceptional solution[187] in which all the assets of the group members are deemed to be owned directly by the parent company which is consistent with the absorption technique of consolidation of treating a group as one single company with one level of ownership in the group's assets.

- ***During the group taxation regime*** - One of the most fundamental tax attributes of the consolidation systems which constitutes simultaneously one of its most relevant advantages is the possibility to made tax free intra-group transfers of assets among the group members. Two approaches are possible: (i) rollover treatment, or (ii) non-recognition of a transfer.
  The most common approach is rollover by granting a deferral treatment on the gains (or losses) the time of the transfer among group members.[188] Such deferred gains/losses are taxed later at the moment that they are sold to an entity outside the group. Alternatively, taxation is likely to occur through a recapture mechanism if there is an event affecting the group relationship of the companies concerned. A typical triggering event is an entity that ceases to be a member of the group[189] or the termination of the group.

---

[183] See Y. Matsui, *IFA General Report,* "Group Taxation", *Cahiers de droit fiscal international,* Vol. 89b, Amersfoort Sdu fiscale en financiele uitgevers (2004), pp. 51-52.
[184] E.g. France, Italy, Netherlands, Spain.
[185] Meaning that the hidden reserves realised through the transfer are not taxable at the moment that such transfer occurs.
[186] Ting states that the policy behind this alternative is the consequence of a consolidation pooling technique under which the subsidiaries remain separate entities. See Antony Ting, "The Unthinkable Policy Option?" 59 *Canadian Tax Journal* 3 (2011) p. 451.
[187] Adopted in Australia. See for a more detailed explanation, Antony Ting, "The Australia's Consolidation Regime: A Road of No Return?, *British Tax Review* 2 (2010), pp. 169-171.
[188] In France, there were differences between its domestic and cross-border tax group regime: under the domestic regime, deferral is granted whereas immediate taxation occurred for intra-group transfers of assets under the cross-border tax regime. This feature does not arise in the other Member States which provide for a cross-border tax group regime as, in that case, intra-group transfers remain visible either on a domestic or cross-border basis.
[189] See Y. Matsui, Y. Matsui, IFA General Report, "Group Taxation", *Cahiers de droit fiscal international*, Vol. 89b, (2004), p. 51.

The second alternative[190] is again exceptional as it is typical of the absorption technique: as all assets are considered to be assets of the parent company, all the intra-group transfers are totally ignored and there is no trace of the movement of the assets within the group or records of the deferred gains or losses since the cost base has been reset.

It is also frequent to find differences between domestic and cross-border tax group regimes: typically under the domestic regime, deferral is granted whereas immediate taxation occurs for intragroup transfers of assets under the cross-border tax regime considering the loss of taxing rights over the transferred assets.
Naturally, for all the States that do not provide for either of these two solutions, the approach is to recognize intra-group transfers of assets by triggering immediate taxation.

- ***On exit*** – The alternatives for intra-group transfers of assets on exit are directly related to the solutions chosen while the group taxation regime is in force. Therefore, it is also possible to identify two different alternatives: (i) recapture treatment, and (ii) inheritance of reset cost bases.
  For States that adopt a rollover treatment of intragroup transfers of assets, the deferred gain is, in general, recaptured when either the transferor or transferee leaves the group or when the group ceases to exist. The second alternative does not trigger taxation on exit because the group members inherit the cost bases of the assets that they take away from the group.
  Naturally, in case of the group taxation systems that do not provide for tax free intragroup transfers, there are no tax consequences for assets that a subsidiary takes with it on leaving the group.

6.8.1.2.2 Shares

- ***On entry*** - Upon entry into a corporate group it is possible to adopt three different approaches[191] regarding the tax treatment of intragroup shares joining a group: (i) *rollover,* (ii) *mark-to-market,* and (iii) *deemed elimination*.
  The first solution is typically followed by the same States[192] that adopt a deferral treatment for assets joining a group. The deemed elimination is once again an

[190] E.g. The Netherlands.
[191] See Antony Ting, "The Unthinkable Policy Option?" 59 *Canadian Tax Journal* 3 (2011) pp. 451-454.
[192] E.g. France, Italy, Spain. The exception is the Netherlands which follows a rollover approach to assets joining a group but a mark-to-market solution on entry regarding shares. The purpose in this case is to realise any taxable profits before consolidation which might otherwise be avoided through consolidation. This occurs in situations where naturally the participation exemption would not apply because, for instance, a minority participation was first acquired (below the participation exemption threshold of 5%) and later substantially increased to the point that it is possible to consolidate. At that moment, the difference between the original

exceptional alternative characteristic of the absorption technique due to the fact that the participations in a group are "invisible". For States which do not provide for general tax free intragroup transfers, the mark-to-market alternative is the rule.

- ***During the group taxation regime*** – The typical approach for States that follow a full consolidation system is that intragroup share transfers do not trigger taxation during the consolidation. This can be achieved either by granting a *rollover treatment*[193] or through the *application of the general participation exemption regime*[194] which require considerably lower participation thresholds than those typically required for meeting the control test for the purposes of qualifying as group members. This latter alternative has considerable advantages in terms of simplicity since there are no special rules of computation or calculation, either at the moment of the transfer or upon exit of the group.

- ***On exit*** – On exit of a company from the group or upon termination of the group two possible alternatives are followed: (i) taxation, and (ii) application of the participation exemption regime.[195]

6.8.1.2.3 Intragroup payments

In the same way, a frequent benefit of group taxation regimes is that there is neither withholding tax nor taxation regarding services, interest, dividends or royalties paid by one tax group member to another.

6.8.1.3 Transfer pricing and anti-avoidance rules

In the domestic group taxation regimes, transfer pricing rules are either not applicable – as the transactions within the group are disregarded – or are applied in a much more lenient fashion[196] because in any case, the relevance is the overall result[197] of the group and not of the result of each of the group members.

---

cost of the (then) minority participation and the subsequent market value at the time of consolidation triggers taxation. See on this J. Müller, *The Netherlands in International Tax Planning* IBFD online (2011).

[193] E.g. France and Spain.

[194] E.g. Italy and the Netherlands.

[195] Typically the solution adopted by EU Member States such as France, Italy, the Netherlands or Spain.

[196] See Frans Vanistendael, "Group Taxation under domestic law: Common Law versus Civil Law countries", in G. Maisto (ed.) *International and EC Tax Aspects of Groups of Companies*, EC and International Tax Law Series, Vol. 4, IBFD (2008), pp. 40-45.

[197] In fact, in practice, even if the arm's length principle is applicable to intra-group transactions the profits and losses arising from such internal transactions are subsequently temporarily or permanently eliminated under the aggregation of the whole group income.

Similarly, the majority of States provide in their respective tax systems for anti-avoidance measures. One of the privileges of entering into group taxation regimes[198] is then the possibility to avoid the application of some of those measures, such as interest deduction limitations or interest barrier rules.

6.8.1.4 Administrative burden

Finally, in some of the cases tax group regimes allow less administrative burden because it simplifies compliance procedures[199] or because formal and documentary transfer pricing obligations are softened for transactions carried out within the group. In any case, the advantage related to administrative burden and compliance is not univocal since typically the rules on group taxation regimes in the sense that deviate from the general corporate income tax applicable to separate entities end up adding complexity to the tax system.

6.8.2 The Disadvantages

6.8.2.1 Step down on tax group equity

One of the disadvantages pointed out in some regimes[200] is the fact that tax groups will often lead to a step down in the tax equity of the parent company. This may have adverse consequences where such tax equity is relevant to determining the tax burden (usually in the case of debt-equity provisions). The step down will occur if the tax book value of the subsidiaries of the parent company of the tax group contains goodwill which is not shown in the stand alone tax balance sheet of that subsidiary. It is characteristic of consolidation models due to the fact that the item "participation" on the balance sheet of the parent company of the tax group is replaced by the assets and liabilities of the subsidiary at the moment that the subsidiary is included within the group. The value of the assets and liabilities is the tax book value that was used by the subsidiary. In other words, no revaluation of the assets and liabilities takes place at the moment that the subsidiary is included in the tax group. This reduction of the tax equity of the tax group may have a negative impact on the deduction of interest that is limited by thin cap, as thin cap uses the amount of the fiscal equity of a taxpayer to determine how much interest is deductible (the so-called debt-to-equity ratio).

6.8.2.2 Reset of cost base

Another disadvantage in some regimes[201] is that within a Tax Group the cost price of a subsidiary that is included in the Tax Group disappears. This cost price is relevant in

[198] E.g. Germany, the Netherlands.
[199] E.g. under the Netherlands fiscal unity, only one tax return has to be filed by the Tax Group.
[200] E.g. Denmark.
[201] In particular the Netherlands fiscal unity.

determining the tax deductible loss in case of a liquidation of the subsidiary. At the moment that a subsidiary enters the Tax Group, the subsidiary will no longer form a participation for the Tax Group as such participations are not visible within the Tax Group. Therefore, the Tax Group loses its historic cost price for this subsidiary. A new cost price for the shares will be determined at the moment that the subsidiary leaves the Tax Group. The "new" cost price equals the tax equity of the subsidiary at the time the Tax Group ceases to exist for that subsidiary. Therefore, any goodwill that was included in the "old" cost price will not be included in the "new" cost price of the subsidiary. In such cases the liquidation loss, which is tax deductible, will be lower than would be the case in situations where the subsidiary would not have been included in the tax group.

6.8.2.3 Limitation on use of losses

If one of the main advantages within group taxation regimes is the possibility to off-set losses against profits, the use of losses is simultaneously one of its most common limitations.
Tax group regimes are a reaction to the general rule according the possibility to use losses is confined to each individual company. The use of losses is, as referred to, one of the most preeminent advantages of groups. In that regard, States generally adopt rules which provide limitations that apply either to losses accumulated before a company joins a group ("pre-group losses") as well as to the existing losses after a company leaves the group or upon the group dissolution ("post-group losses"). Those rules are relevant in order to prevent loss trafficking within the group and, more generally, to restrict the possibility of the use of losses by entities other than those that incurred them.

- ***Pre-existing losses*** - in general,[202] previous losses before a company joins a group taxation regime cannot be used in order to offset group's profits. This is a limitation aimed at avoiding the integration of loss-making companies within the group. The method adopted is usually by *ring-fencing* or *quarantine*[203] of those losses, meaning that they can only be used by the company that had them before joining the group against its own profits[204] and are usually combined with a possibility to carry-back

[202] E.g. the cases of Denmark, France, Germany, Italy, Netherlands, Portugal or Spain.
[203] It is also possible to find solutions where profits of joining group members are also ring-fenced. Under the Netherlands fiscal unity, a profitable company which joins an overall loss making group may not use the losses of that group to offset the prior existing profits prior to joining the group. This is also a solution aimed at avoiding group loss shopping.
[204] A related issue is whether the pre-existing losses should be applied before or after the consolidation of the profits of the group. Under the first option, the previous losses of a subsidiary are applied to offset the profits of that company. The remaining taxable income is then offset against the income of the remaining group members. The second option involves that the pre-existing losses are offset only after the taxable income of a particular group member is aggregated with the remaining members of the group. Those losses are then apportioned considering the taxable profit which is allocated to the group member that incurred them. Either solution can be found among the different States. From a policy perspective, the first option is simpler and avoids the risk of loss expiry if the overall profit of the group is negative.

or carry-forward those losses at that company level. A possible variation of this method followed by some States is the introduction of a temporary ring-fencing or quarantine period under which pre-losses are subject to a temporary restriction[205] before they can be offset against profits of other companies within the group. The underlying policy for the ring-fencing or quarantine method is that as the pre-existing losses were incurred while the group member was treated as a separate taxpayer those losses should remain with that company and be available only for offset against its future taxable income. In fact, if group member companies remain as separate entities, accumulated losses should remain with the company within which they arose and its use should continue to be governed by the rules which are applicable prior to the tax group.[206]

A different solution is the *suspension* or *freezing*[207] of the pre-existing losses which is found in Germany. In this case, the losses incurred prior to entering into the group are excluded from offsetting profits during the group taxation regime and are reverted back when the company leaves the group. This solution is rare because of the deferral of loss utilization and the risk of either loss expiry or unusable losses if the subsidiary never leaves the group.

There are two other solutions which are not commonly used. One is if the immediate *transfer to the parent* company of the group of a subsidiary's pre-existing losses. This is typical of consolidation systems which follow an absorption technique.[208] On the other extreme, there is the *cancellation* of the subsidiary's pre-existing losses.

In States providing for cross-border group taxation regimes the typical solution is that (for example, Austria, Denmark, Italy) the pre-group losses are completely disregarded[209] for the purposes of the group taxation regime.

- ***Group losses on exit*** **-** Also post-group losses or losses upon termination of the regime have limitations in use. The solutions adopted by States reveal different options in regard to the treatment of group losses on exit. Three possible alternatives are found: (i) *stay with the group*; (ii) *apportionment,* and (iii) *cancellation*.

  The first alternative is then to allow that the losses remain for use within the group parent member.[210] This solution is simple as it avoids the burden for allocation rules to apportion the consolidated group losses to a leaving subsidiary.

[205] E.g. in the case of Sweden where a five-year period of quarantine is applicable.

[206] See Maureen Donnelly and Allister W. Young, "Group Relief for Canadian Corporate Taxpayers – At Last?", 59 *Canadian Tax Journal* 2 (2011), p. 250.

[207] See Dieter Endres, "The Concept of Group Taxation: A Global Overview", 31 *Intertax*, Vol. 10, (2003), p. 352.

[208] Therefore, only adopted in Australia.

[209] In France the WCR followed a solution of ring-fencing the pre group losses.

[210] E.g. France (under the existing RIF), Italy, Netherlands.

The second alternative is to provide that when a company exits the group, such company takes with it all losses that remain unused at the time of the departure both those losses that it carried over when it entered into the group and those that are apportioned to that company and which correspond to the losses incurred while a member of the group. This latter solution[211] is the one that follows more closely the principle of separate identity of the group members, since the unused losses are not surrendered either to the group or to its parent company.
The last alternative is simply to ban[212] the possibility to use the losses either at the group level or the company leaving the group, meaning that those losses can no longer be used at all.

- ***Rules on reinstatement (recapture) of losses***– rules on recapture of losses are common among Member States in order to avoid double dipping situations[213]. Therefore, and in the case of foreign permanent establishments included in the group perimeter the rules adopted vary in accordance with method to relief double taxation. If double taxation is relieved according to the ordinary credit method, this will involve an indirect recapture[214] of the loss previously deducted at the level of the head office global income: by carrying forward the loss in the source country, the income and thus the tax in the source country will be reduced and consequently, the tax credit in the following year is reduced in the head office State. If the exemption method is followed, then the previously deducted losses are generally added back to the profits head office in a subsequent year. A third (different) option is that the losses may be deducted at the level of the head office but only in the situations where they can no longer be deducted in the State where they originated or elsewhere.

- ***Cross-border group offset of losses ("indirect loss equalization")*** –the major concern also in those cases regards the potential double use of those losses both in the State where they originated and in the State where the parent group member is located. In this regard, in States which allow cross-border offset of losses, adopting

[211] E.g. Spain.
[212] E.g. Portugal
[213] Double dipping situations regarding losses can typically occur: (i) unilaterally – if losses are deducted twice at the level of the same entity; or (ii) bilaterally – if the losses are deducted twice in two different entities, which is typically the situation arising in a cross-border scenario.
[214] There are different techniques for recapture of losses which can, in general, be grouped in two major techniques:
(a) *ex tunc* recapture, case in which the add-on of the previously deducted losses corresponds to a revocation of the previous loss. In this technique, the add-on does not refer to the later year (when profits arise in the source State) but to the initial year when losses were suffered,
(b) *ex nunc* recapture, in which the recapture occurs at a later moment when the entity in the source State becomes profitable.
See on this, Axel Cordewener et al., "The Tax Treatment of Foreign Losses: Ritter, M&S and the Way Ahead (Part One)", *European Taxation* 4, IBFD (2004), p. 138-139.

a recapture mechanism is a typical solution: either while during the group regime is in force and/or (only)[215] upon group exit or termination. This recapture mechanism may be more or less flexible while the group regime applies in the sense that: it may apply only when the group member that had losses becomes profitable or as an alternative[216] as long as the losses are utilized by way of carry-back or carry-forward or if there is an (unused) offset possibility in the State of residence of the group member. An alternative solution is again only to allow the deduction of losses in the case it is no longer possible to deduct them in the State of origin or elsewhere.[217]

6.8.2.4 Minimum life span

Also considered a disadvantage is the fact that many tax group models have a minimum life span (which usually varies from 3 to 10 years). That being the case, it is not possible to dissolve the group during that period. In other States,[218] under group taxation regimes which do not provide for any life span, it is therefore possible to revoke the election. Again the policy choice between revocable elections and minimum life spans are based on a compromise between flexibility and anti-avoidance approach.

Of interest are again the differences that arise within some of the Member States which provide for both national and cross-border tax group regimes: a minimum life span does not exist in the national tax group regime, but does exist, however, in the case of the cross-border tax group regime. That is the case in Denmark where no minimum life span applies to the national join taxation regime but a binding period of 10 years is applicable in the international joint taxation regime (with a new maturity period of 10 years being applied, upon request, after the expiration date). In Italy, with the cross border tax group regime being irrevocable for five years (and, if renewed, the option is irrevocable for another three tax years) while in a purely domestic group the option operates for the shorter period of three years.

6.8.2.5 Tax liabilities

A disadvantage which is typical of consolidation tax group models relates to tax liabilities. The approaches vary once again in this regard. A solution is the parent company being the primary taxpayer liable for the debts but with tax group company being joint and severally liable for the corporate income tax due on consolidated profits generated.[219] Other solutions

[215] This is the case in Italy.
[216] The solution followed by Austria.
[217] The case of UK and Ireland.
[218] E.g. The Netherlands, Spain.
[219] An interesting solution is found in Denmark: as part of the join taxation, an administrative company (the ultimate Danish parent company) must be appointed having has a main duty to pay the tax levied on the group. In turn, the Danish group companies must pay to the administrative company an amount equal to their

may be each company being responsible for its own tax liability or the parent company being the single taxpayer responsible for the whole group.

6.8.2.6 Administrative burden

Finally, in some of the cases, tax group regimes increase the administrative burden because it may be necessary to file a tax return not only for each of the members of the group but also a (complex) return referring to the overall group (a so-called consolidated tax return). In other cases, the administrative burden may be related with the formal requirements necessary to establish a tax group (e.g. the need to file a prior request before the tax authorities) or with other compliance costs like the need of all financial statements of the group members must be audited[220] or, in case of cross-border tax groups, the need to recalculate the taxable base of the foreign entities. This recalculation of the taxable base of the foreign entities regarding the income attributed to the parent company leads to what may be considered in certain cases as a disadvantage if the foreign entity is profitable: if the group member is located in a country with a lower tax burden (either due to the lower applicable tax rate of due to the recalculation according to the rules of the Member State of the parent company) then the effect is that those profits will be subject to the higher taxation of the Member State of the parent company.

6.9 Formalities/procedures

Another relevant formality typical of certain tax group schemes, is the condition of entering into an agreement for the profit/losses transfer among group members. This condition is particularly relevant in the *Organschaft.* Such profit transfer agreement must be concluded between subsidiaries and the parent company according to which, the subsidiary agrees to transfer all profits and losses to the parent company and the parent undertakes to compensate the subsidiary for any losses.[221] A most relevant issue is the fact that in order for the *Organschaft* to apply, such agreement must meet certain specific requirements provided under German law.

Typically, in order for the tax group regimes to apply, it is necessary to follow a procedure which, in general, consists of the filing of an application or some return to the tax authorities. Only in one case is the application of the regime automatic: the Danish national joint taxation regime. In one or other particular case (for example, Spain) it is preceded by a

---

portion of tax levied on the group's consolidated taxable income. This applies both under the national and the international joint taxation regimes but in this latter case, the foreign companies should, but are not obliged to, pay to the Danish administrative company their portion of the taxable income calculated under the Danish rules.

[220] E.g. the case of Italy where all the accounts of the foreign companies must be audited.

[221] See Simon Patrick Link, "Country Report Germany", in G. Maisto (ed.) *International and EC Tax Aspects of Groups of Companies*, EC and International Tax Law Series, Vol. 4, IBFD (2008), pp. 315-316.

resolution of the General Shareholder's meeting of all the companies which will become part of the tax group.
Again there are differences in some Member States which provide for both a domestic and a cross-border tax group regime. An example may be found in Italy,[222] where the application of the cross-border regime is conditional upon a preliminary request for a ruling should be submitted to the Ministry of Finance which should then provide an express approval whereas in a pure domestic situation the filing of a return is sufficient, without the need to obtain prior authorization.

6.10 Interim conclusions

Tax group regimes exist in many Member States. The analyses performed evidences that many differences exist in the various existing group taxation regimes, starting with the fundamental choice of the degree of economic integration. Most of them apply only to domestic companies of those Member States. Therefore, the companies that are resident in a different State typically cannot benefit from the tax groups regime of the State of such parent company.

Even the very few Member States which provide for such regimes on a cross-border basis, they set forth different requirements for tax groups composed exclusively of domestic companies as compared with ones which also integrate foreign companies. Even in those systems that contain such cross-border elements, the degree of integration is usually achieved to a lower degree than the domestic regimes.

Overall, the possibilities of cross-border group taxation are still very limited at the EU level. This issue is just as relevant, considering the fact that international trade and MNCs play a fundamental role in today's economy. The existence of tax groups is motivated by the principle of neutrality in the taxation of corporate activities: tax systems should tax the income in the same way irrespective of the organic structure adopted for that purpose. This means that a tax system should not lead to distortions only because such activity was not performed by a single company but rather by a group of companies.

The limitation of tax group benefits to domestic situations, the difference in treatment between domestic and cross-border situations, are all examples of situations which may affect neutrality and therefore, create obstacles as to an efficient allocation of resources.

In this regard, it is relevant to analyse how tax treaties and EU law may affect group taxation and contribute to eliminating tax obstacles deriving from the limitations of the existing group taxation regimes. That is the purpose of the analysis of Parts III and IV of this thesis.

[222] The same applied previously to the French WCR which was also dependent on prior approval, contrary to the RIF.

Part III

Group Taxation and Tax Treaties

Chapter 7

Tax Treaty Provisions and Group Taxation

7.1 Introduction

Tax Treaties are international agreements entered into between governments under which those governments agree to limit the exercise of their fiscal jurisdiction. As a general matter it is acknowledged that the OECD Model Tax Convention ("OECD MTC") has been a remarkably successful document in terms of its impact on how tax treaties are negotiated and applied worldwide. Even countries or organizations that adopted their own model, rely (with variations) on the structure and articles of the OECD Model Tax Convention and frequently make reference to its Commentary. There are currently more than 3.000 tax treaties in force around the globe that are broadly based on the OECD Model and the Commentary on that Model has been cited as a useful guidance by courts in virtually every OECD member country and an ever-increasing number of non-member countries.

Tax treaties contain distributive rules (Articles 6 to 22 of the OECD MTC), which usually apply to the source State and often limit its rights of taxation. If the source State still maintains taxing rights (even although restricted) after the application of treaty provisions, double taxation in the State of residence is prevented or mitigated by the application of the exemption or credit methods (Article 23 of the OECD MTC). The provisions of tax treaties may then affect the way in which a State levies tax related to its territory. Relevant in that regard is how they can be relevant for the specific topic under analysis of cross-border group taxation.

The discussion about cross-border groups and tax treaties starts with the more fundamental issue of whether and how groups of companies (and not tax group regimes *per se*) are recognized for the purposes of tax treaties. Typically, group taxation regimes are not dealt with under OECD MTC or in concluded bilateral tax treaties. While it is possible to find some treaty provisions dealing with groups of companies, the fact is that tax treaties follow the general rule of the separate entity principle and therefore, do not acknowledge the fact that, under the domestic tax laws of some countries, companies within a group may be treated, to a greater or lesser extent, as a single entity.

Then, the analysis of the impact of group taxation regimes on tax treaties requires determining whether, for the purposes of claiming treaty benefits, a treaty should apply to the group itself, the parent company of the group or to each individual group member.

7.2 Tax Treaty provisions dealing with tax groups

The OECD MTC does not contain provisions which deal specifically with tax groups and there is little evidence of tax treaty provisions concluded bilaterally which deal with this issue. However, it is still possible to find some specific tax treaty rules in some tax treaties which do deal with group taxation.

Some tax treaties include a provision[223] for a deferral of capital gains taxation on transfers of foreign property within tax groups which are effected in exchange for shares. In the case a resident tax group transfers a shareholding in a foreign subsidiary from one group member to the other in exchange for shares, the State of source (where the subsidiary is located) should provide for a tax deferral on such transfer due to the fact that the same is made between companies of a tax group. The effect of such provision is then to extend the domestic tax group concept and effects to foreign tax treaty partners.[224] The underlining

[223] Examples may be found in the:

- Protocol of the US-Spain Income Tax Treaty concluded on 22 February 1990 or the Protocol to the US-Mexico Income Tax Treaty concluded on 19 September 1992 or the Protocol to the US-Israel Income Tax Treaty concluded on 20 November 1975. The typical wording of such provision is:

  " For purposes of this paragraph, no tax shall apply in the case of a transfer of property between members of a group of companies that file a consolidated tax return, to the extent that the consideration received by the transferor consists of participation or other rights in the capital of the transferee or of another company resident in the same Contracting State that owns directly or indirectly 80 per cent or more of the voting rights and value of the transferee, if:

  (a) the transferor and transferee are companies resident in the same Contracting State;

  (b) before and immediately after the transfer, the transferor or the transferee owns, directly or indirectly, 80 per cent or more of the voting rights and value of the other, or a company resident in the same Contracting State owns directly or indirectly (through companies resident in the same Contracting State) 80 per cent or more of the voting rights and value of each of them; and

  (c) for the purpose of determining gain on any subsequent disposition,

  (i) the initial cost of the asset for the transferee is determined based on the cost it had for the transferor, increased by any cash or other property paid; or

  (ii) the gain is measured by another method that gives substantially the same result.

  Notwithstanding the foregoing, if cash or property other than such participation or other rights is received, the amount of the gain (limited to the amount of cash or other property received), may be taxed by the other Contracting State."

Other examples are to be found in the:

- Protocol to the Mexico-Netherlands Income Tax Treaty concluded in 27 September 1993 (as amended in 2008) or Protocol to the Mexico-Switzerland Income Tax Treaty concluded on 3 August 1993 (as amended in 2009) which sets out that:

  "[…], *gains from the alienation of shares of a company resident in one of the States shall be taxable only in the other State if:*

  A. The alienation of shares takes place between members of the same group of companies to the extent that the remuneration received by the alienator consists of shares or other rights in

rational of applying a preferential tax regime for reorganizations within a group is the consequence of the economic ownership of the assets held by the companies within the group remaining unchanged pursuant to the intra-group reorganization.[225]

---

the capital of the acquirer or of another company which owns directly or indirectly 80% or more of the voting rights and value of the acquirer and which is resident in one of the States or in a country with which Mexico has a broad exchange of information agreement in terms of Annex 10 to the Administrative Tax Regulations (Resolución Miscelánea Fiscal), but only if the following conditions are met:

(a) the acquirer is a company which is resident in one of the States or in a country with which Mexico has a broad exchange of information agreement in terms of Annex 10 of the Administrative Tax Regulations (Resolución Miscelánea Fiscal);

(b) before and immediately after the transfer, the alienator or the acquirer owns directly or indirectly 80% or more of the voting rights and value of the other, or a company which is resident in one of the States or in a country with which Mexico has a broad exchange of information agreement in terms of Annex 10 of the Administrative Tax Regulations (Resolución Miscelánea Fiscal) owns directly or indirectly (through companies resident in one of those States) 80% or more of the voting rights and value of each of them; and

(c) for the purpose of determining the gain on any subsequent alienation:

(i) the original cost of the shares for the acquirer is determined on the basis of the cost incurred by the alienator, increased by any cash or other remuneration other than shares or other rights paid; or

(ii) the gain is calculated by another method that gives substantially the same result.

Notwithstanding the foregoing, if cash or other remuneration other than shares or other rights is received, the amount of the gain (limited to the amount of cash or other remuneration. […]*"*

- Protocol to the Mexico-Spain Income Tax Treaty concluding on 24 July 1992 referring that: "*[…] Where, owing to a reorganization of companies which are owned by the same group of shareholders, a resident of a Contracting State alienates property as a consequence of a merger or division of companies of or an exchange of shares, then the recognition of the gain arising on the alienation of such property shall be deferred, for purposes of the income tax in the other Contracting State, to the moment in which a subsequent alienation which does not meet the requirements provided for in this paragraph for the deferment of the gains is effected.*"

A further example is also the Netherlands-Nigeria Income Tax Treaty concluded on 11 December 1991 which provides in its Protocol:

- "Art. 13 (4): *Gains from the alienation of any property other than that referred to in paragraphs 1, 2 and 3, shall be taxable only in the State of which the alienator is a resident. However, gains from the alienation of shares issued by a company resident in the other State may be taxed in that other State except if such gains are realized in the course of a corporate organization, reorganization, amalgamation, division or similar transaction.*
- In Protocol VI it is referred that: *It is understood that the terms corporate organization, reorganization, amalgamation, division or similar transaction refer to a transfer of shares within a group of associated enterprises. In that case the shares will be evaluated for the transferee at the bookvalue of the transferor.*"

[224] See Claus Staringer, "Business income of tax groups in tax treaty law", G. Maisto (ed.) *International and EC Tax Aspects of Groups of Companies, EC and International Tax Law Series*, Vol. 4, IBFD (2008), p. 148.

[225] See Domingo J. Jiménez-Valladolid de L'Hotellerie-Fallois, *Reorganization Clauses in Tax Treaties*, IBFD online (2014).

Other tax treaties include a provision[226] that excludes the application of the non-discrimination article in order to extend the benefits of group taxation on a cross-border basis. Such provision provides that the foreign ownership provision set out in paragraph 5 of Article 24 of tax treaties which follow the OECD MTC should not be used to oblige a State to permit cross-border group taxation.

In other cases, it is also possible to find some provisions in tax treaties which, although not specifically related to tax groups, in practice will be relevant to taxpayers organized as tax groups. This is the case of specific rules included in tax treaties which deal with corporate reorganizations. The purpose of these rules is to provide for a domestic tax deferral of the unrealized capital gains that are transferred pursuant to a reorganization. If a foreign State is involved, it frequently occurs that such State will treat the foreign reorganization as a taxable event and not provide the tax deferral as in the other Contracting State. The aim of including these specific tax rules[227] is precisely to avoid the mismatch deriving from tax deferral in one State and taxation in the other State.

7.3 Tax Treaty provisions dealing with groups of companies

As stated above, although it is indeed possible to find some provisions in the tax treaties indirectly dealing with groups of companies, there is less recognition of groups of companies in tax treaties than under domestic tax laws.[228]

Tax treaties modelled on the OECD MTC do not contain specific provisions dealing with corporate groups and only indirectly and occasionally address the taxation of groups of companies. Probably, this is because the group approach contradicts the separate-entity approach that underlies tax treaties. In fact, an underlying principle under the OECD MTC

---

[226] Some examples:

- Protocol no. 21 to the DTC US/Germany which sets out: "*It is understood that para. 4 of Art. 24 shall not be construed as obligating a Contracting State to permit cross-border consolidation of income or similar benefits between enterprises.*"
- Protocol no. 16 to the 2012 DTC Germany/Netherlands: "Article 24 paragraph 5 does not prevent a Contracting State to limit income taxation on a consolidated basis ("Organschaft" or "fiscal eenheid") to persons who are residents of that state or permanent establishments in that state." *["Artikel 24 Absatz 5 hindert einen Vertragsstaat nicht, seine Gruppenbesteuerung ("Organschaft" oder "fiscale eenheid") auf in diesem Staat ansässige Personen oder dort belegene Betriebsstätten zu beschränken."]*

[227] See Domingo J. Jiménez-Valladolid de L'Hotellerie-Fallois, *Reorganization Clauses in Tax Treaties*, IBFD online (2014).

[228] In that regard, see for instance, Mary C. Benett and Carol A. Dunahoo, See Mary C. Bennett and Carol A. Dunahoo, "*The NFCT Tax Treaty Project: Towards a U.S. Tax Treaty Policy for the Future: Issues and Recommendations*", p. 91 (2004), available at http://www.nftc.org/default/Tax%20Policy/05_26_05_NFTC%20_Tax_Treaty_Project_Part_1.pdf (accessed on 27 June 2012) observing that treaties should also provide for appropriate guidance as regards the treatment of multiple entity groups.

is actually the recognition of the separate entity principle,[229] which has already been considered the major problem regarding tax treaties because it fails to deal with modern corporate group structures.[230]

The clearest example of a provision dealing with groups of companies but reflecting the separate entity approach is probably *Article 9* of the OECD MTC regarding *associated enterprises*. However, the article in itself does not contain any definition of the meaning of associated enterprises. The subjective scope of this provision is provided by its paragraph 1, which states that it applies in situations where an enterprise "participates directly or indirectly in the management, control or capital of" another enterprise. The provision in itself is very broad and does not fit in with the typical characteristics of tax group regimes (e.g. where a considerably high shareholding threshold is required for entitlement to group membership). Under paragraph 1 of Article 9, the conditions agreed or imposed between companies of a multinational entity in their commercial or financial relations should be similar to those conditions which would have been agreed between independent enterprises. This provision contains the arm's length principle which, in itself, reflects the separate-entity approach for taxation: companies should be considered separately rather than being taxed as inseparable parts of a single global group enterprise. Transactions between related corporations are accepted as regards their existence and nature, but the pricing is adjusted when it deviates from the arm's length standard.[231]

The separate entity principle is also reflected where a company resident in one State has a PE in the another State.[232] *Article 7* of the OECD MTC determines whether the source State

---

[229] See, *inter alia,* Jacques Sasseville, "Treaty recognition of groups of companies", in G. Maisto (ed.) *International and EC Tax Aspects of Groups of Companies*, EC and International Tax Law Series, Vol. 4, IBFD (2008), pp. 130; Luc de Broe, *International Tax Planning and Prevention of Abuse,* IBFD Doctoral Series - Vol. 14 (2009), p. 501, or Richard Vann, "A Model Tax Treaty for the Asian-Pacific Region?", (November 8, 2010), *Sydney Law School Research Paper* No. 10/122, available at SSRN: http://ssrn.com/abstract=1705765 (accessed on 14 November 2011).

[230] See Richard Vann, "Reflections on Business Profits and the Arm's-Length Principle" *Sydney Law School Research Paper* No. 10/127, available at SSRN: http://ssrn.com/abstract=1710945 (accessed on 14 November 2011). In a broader perspective, that the main source of international difficulties is the transnational allocation of intra-group transactions, see Stanley S. Surrey, "Reflections of the Allocation of Income and Expenses among National Tax Jurisdictions", *Law & Policy in International Business* 10 (1978), pp. 410-418.

[231] See Richard Vann, "A Model Tax Treaty for the Asian-Pacific Region?", (8 November 2010), *Sydney Law School Research Paper* No. 10/122, available at SSRN: http://ssrn.com/abstract=1705765 (accessed on 14 November 2011) or Monica Erasmus-Koen, "Art. 9 of the OECD Model Convention", *Transfer Pricing and Business Restructuring*, IBFD (2009), p. 99.

[232] Paragraph 1 of Article 7 contains one of the most fundamental principles in international tax law according to which business profits are taxable only in the State of residence of the person carrying on the enterprise, unless that person carries on a business in the other State through a PE. The PE concept plays an important role in allocating tax rights. In the absence of a PE, the business profits derived in the source State by a non-resident are exempt from tax there and are taxable only in the residence State. The existence of a PE is a minimum threshold that must be satisfied in order for a source State to tax non-residents on business profits derived from sources in that State[232]. Once a PE is established in the source State, not only does the source State acquire the right to tax the business profits attributable to the PE, but its right to tax also takes

may tax the profits of an enterprise carried on by a resident of the other State through a PE located there and, if so, how much of the profits attributable to that PE may be taxed in that State. For the purposes of determining the attribution of the profits to the PE, the OECD MTC the Authorized OECD Approach[233] ("AOA") which incorporates a functional separate entity approach.[234] It provides[235] that profits to be attributed to a permanent establishment are the profits which it "might be expected to make if it were a separate and independent enterprise engaged in the same or similar activities under the same or similar conditions, taking into account the functions performed, assets used and risks assumed through the permanent establishment and through other parts of the enterprise". In that regard, both deemed income and deductions are considered for the purpose of attributing profits to a PE. The adoption of the AOA and the determination of profits of a PE is made under a two-step approach: the first step[236] is required in order to hypothesize the PE as a

---

precedence over the residence State's right to tax those profits. Thus, this paragraph 1 sets two requirements: first that an enterprise of one Contracting State is carrying on business in the other Contracting State; second that such business in being carried on in that other State though a PE in accordance with its definition in Article 5 of the OECD Model. In such case, that other State may tax the profits which, in accordance with the rules contained in paragraph 2 of such provision, are attributable to the permanent establishment. The State of residence must then relieve double taxation in accordance with Article 23 of the OECD Model.

[233] The AOA reflects the approach on the attribution of profits to PE. This approach was developed over the years by the Committee of Fiscal Affairs ("CFA") and approved in July 2008 with the "*2008 report on the attribution of profits to permanent establishments"*, of 17 July. The subsequent adoption in 2010 of a new version of Article 7 was due to the fact that the CFA recognized that there were a few differences between some conclusions of the 2008 Report and the interpretation of Article 7 under the existing Commentary at the time. In that regard it was decided that the adoption of the AOA should be done in two steps. The first step was to provide guidance on the interpretation of existing treaties based on the wording of the former Article 7. The second step consisted of the drafting of a new article 7 which could allow the full implementation of the AOA. This was complemented with the updated commentary and also with the "*2010 report on the attribution of profits to permanent establishments"*, of 22 July. This report did not made any changes to the conclusions stated in the 2008 report previously referred to. It merely conformed terminology and updated cross-references to the 2010 version of Article 7. For an overview of the developments, see Mary Bennett, "Article 7 – New OECD rules for attributing profits to Permanent Establishments", Dennis Weber and Stef van Weeghel, *The 2010 OECD updates: Model Tax Convention & TP Guidelines*, Series on International Taxation, Kluwer Law International, (2011) pp. 21-36.

[234] For an analysis see, *inter alia*, Philip Baker and Richard S. Collier, "Attribution of Profits to Permanent Establishments", IFA General Report 2006 (long version, CD-ROM), pp. 1-101; Wolfgang Schön, "Attribution of Profits to PEs and the OECD 2006 Report", 46 *Tax Notes International* 10, 4 June 2007, pp. 1059-1072; Mary Bennett and Raffaele Russo, "Discussion Draft on a New Article 7 of the OECD Model Convention, *International Transfer Pricing Journal*, 3/4, IBFD (2009), pp. 73-80 and Irene J.J. Burgers, "The New OECD Approach on Profit Allocation: A Step Forward Towards Neutral Treatment of Permanent Establishments and Subsidiaries", 10 *Florida Tax Review* 1 (2009), pp. 51-76.

[235] See paragraph 15 of the Commentary to Article 7 of the OECD MTC.

[236] The underlying principle regarding step 1 – hypothesizing the PE as a distinct and separate enterprise – is that it is not possible to proceed on a legal analysis since PE and Head Office are one and the same entity and here is absence of legally binding contracts between the. In fact, the legal position is unhelpful in the PE context because it is not possible that a single part of the enterprise legally owns assets, assumes risks, possesses capital, etc. Therefore the approach applicable in the PE context which allows attributing risks, the economic ownership of assets and attributing capital to the PE is performed through a factual and functional analysis of all economically relevant characteristics relating to the PE. This is made by identifying the

separate and independent enterprise; under the second step,[237] the remuneration of the dealings between the hypothetical distinct and separate enterprise is determined based on a comparability analysis and by applying the transfer pricing methods by analogy in order to determine the profits to be attributed to the PE. The adoption of the AOA strengthens[238] the independence of the PE[239] and aims at allocating the profits to the State where they are economically generated.

Another relevant provision is provided by *Article 5 (7)*. It sets out that a subsidiary may not be considered a PE of its non-resident parent company as a result of the control of the subsidiary exercised by the parent company. The underlying principle is the recognition of separate legal personality between parent and subsidiary. As stated in the OECD Commentary:

> "[…] the existence of a subsidiary company does not, of itself, constitute that subsidiary company a permanent establishment of its parent company. This follows from the principle that, for the purpose of taxation, such a subsidiary company constitutes an independent legal entity. Even the fact that the trade or business carried on by the subsidiary company is managed by the parent company does not constitute the subsidiary company a permanent establishment of the parent company."

The purpose of Article 5 (7) is to have a clarifying role by confirming that the conditions under which a PE exists are when any of the situations in Articles 5(1) to (6) of the OECD MTC are met.

---

significant people functions which are then the basis for hypothesizing the PE as a distinct and separate enterprise.

Another relevant feature of the AOA that enhances the independence of the PE is the recognition and determination of the nature of dealings between PE and the rest of the enterprise. Those dealings refer to "transactions" between the hypothesized parts of a single enterprise that can be recognized under the provisions of the AOA and which, although have no legal consequences, are inferred for the purpose of determining the PE profits.

[237] After the PE has been hypothesized as a separate and independent enterprise, step 2 requires determining the PE's profits. For that purpose the dealings previously recognized under step 1 between the PE and the remaining enterprise will be compared to uncontrolled transactions of independent enterprises through the application, by analogy, of the comparability factors of the Transfer Pricing guidelines. The arm's length pricing of the dealings will then be determined by applying the methods of the Transfer Pricing guidelines. The choice should rely on the most appropriate method that allows reaching the arm's length compensation taking into account the functions performed, the assets used, and the risks assumed by the PE.

[238] As referred by Burgers, under the AOA, PEs and and subsidiaries are treated neutral as far as the functional analysis and comparability analysis is concerned. See Irene J.J. Burgers, "The New OECD Approach on Profit Allocation: A Step Forward Towards Neutral Treatment of Permanent Establishments and Subsidiaries", 10 *Florida Tax Review* 1 (2009), p. 74.

[239] See Wolfgang Schön, "Attribution of Profits to PEs and the OECD 2006 Report", 46 *Tax Notes International* 10, 4 June 2007, p. 1059.

Anther provision which addresses intra-group is *Article 10 (2) (a)* of the OECD MTC. This clause provides for a lower[240] withholding tax rate – 5% - if the shareholder is a company holding directly at least 25% of the subsidiary. This clause, somehow, seems to reflect the recognition in tax treaties that in some cases, companies should not be treated separately for tax purposes in order to avoid excessive taxation of inter-company dividends.[241] In all events, this provision only addresses juridical double taxation, although it is worth considering also the reference in paras. 49 to 55 of the Commentary to Article 23. Here the Commentary also refers to the important issue of economic double taxation regarding the taxation of profits of multinational groups. Although it recognizes that no consensus was reached in this regard, it refers to the possibility of States addressing this issue in their bilateral treaties and proposes wording for some alternative provisions to be adopted by States.

There are other provisions in tax treaties that consider intra-companies relationships: *Article 11 (6) and Article 12 (4)* of the OECD MTC which refer, respectively, to the interest and royalties provisions. These provisions refer to intra-group transactions and the taxation of multinational corporate groups in general and accordingly, they recognize the special relationships between payer of the income and the beneficial owner or between both of them and a third party. But the perspective is different from the one applying (in a greater or lesser extent) the single entity approach to corporate groups which is inherent to tax groups' regimes. First, because the reference to a special relationship is too broad – as can be inferred from the Commentary to these clauses[242]- and it does not fit in with the typical characteristics of group taxation regimes which require a high degree of integration (typically participation threshold). Second, because even if these provisions reflect the existence of a special relationship, the starting point is that intra-group transactions have to be recognized in the first place due to the adoption of the separate entity principle, thus, accepting the application of the treaty rules referred to on the allocation of taxing rights. As a second step, the transactions are subject to the arm's length test. That is because the application of the arm's length standard aims not only at allocating income between the involved parties but also to allocate taxing rights to the involved countries.[243]

[240] Under the general rule of Article 10 (2) (b) OECD MTC, cross-border dividends may be taxed at source up to a rate of 15%.

[241] See Jacques Sasseville, "Treaty recognition of groups of companies", in G. Maisto (ed.) *International and EC Tax Aspects of Groups of Companies*, EC and International Tax Law Series, Vol. 4, IBFD (2008), pp. 131-132.

[242] See paras. 31 and 32 of the Commentary to Article 11 and paras. 23 and 24 of the Commentary to Article 12, both of the OECD MTC.

[243] See Wolfgang Schön, "International Tax Coordination for a Second-Best World (Part III)", 3 *World Tax Journal* 1 IBFD (2010), p. 230 and OECD *Transfer Pricing Guidelines for Multinational Enterprises and Tax Administrations* (Paris: OECD 2010), Chapter I: The Arm's Length Principle, Part A, pp. 25 et seq.

Finally, *Article 13 (4)* is also a provision which is considered to implicitly recognize[244] the existence of groups of companies. It deals with the alienation of shares deriving more than 50% of their value from immovable property situated in a Contracting State. In that regard, it allocates primary taxing rights to the State where the property is located. It has an anti-abuse purpose[245] in order to prevent rule shopping that could otherwise occur by using legal entities that are interposed as owners of immovable property and thus benefit from paragraph 5 which allocates exclusive taxing rights to the State of residence.

7.4 Group taxation and tax treaty entitlement

7.4.1 Overview

In the absence of specific treaty provisions, the interaction of the general rules provided in the OECD MTC with group taxation regimes should be analysed. In particular, it is relevant to analyse what the impact of existing group taxation rules is as regards the application of tax treaties, as concerns the tax treaty entitlement of the companies belonging to a tax group as well as possible issues arising from conflicts between States regarding the attribution of income to companies of a group. Conversely, it is also relevant to determine what the possible impact of tax treaties might be regarding the application of group taxation regimes.

The analysis of the impact of group taxation regimes on tax treaties starts primarily by determining whether, for the purposes of claiming treaty benefits, a treaty should apply to the group itself, the parent company of the group or to each member of the group. The starting point is that, in principle, each member of the group is entitled to treaty benefits. However, the question arises whether this changes due to the group taxation regime. Based on the classification adopted in Part II of this thesis,[246] this issue is particularly relevant for group taxation regimes which adopt a full pooling system, as they provide for a considerable degree of integration of the respective group members.

The first step when applying a tax treaty requires determining to whom such treaty applies. For this purpose, Article 1 of the OECD MTC provides that a Convention applies to persons who are residents of one or both of the Contracting States. That generates two[247] questions when dealing with entitlement[248] to treaty benefits by tax groups as a whole or its group members: if they constitute a person as defined in Article 3 (1) (a), and if they can be considered as residents of a Contracting State as defined in Article 4 (1).

---

[244] See Jacques Sasseville, "Treaty recognition of groups of companies", in G. Maisto (ed.) *International and EC Tax Aspects of Groups of Companies*, EC and International Tax Law Series, Vol. 4, IBFD (2008), p. 132.
[245] See Stefano Simontacchi, "Immovable Property Companies as Defined in Article 13 (4) of the OECD Model", *Bulletin-Tax Treaty Monitor* 1 IBFD (2006), pp. 29-30.
[246] See *supra* Chapter 6.
[247] See Klaus Vogel, "Double Tax Treaties and Their Interpretation", 4 *International Tax & Business Law* 1, (1986), p. 44.
[248] See Philip Baker, Double Tax Conventions, Sweet & Maxwell 3rd edition (2015), B-1.

7.4.2 Tax groups as persons

The definition of *person* includes an individual, a company and any other body of persons. According to the OECD MTC Commentary,[249] this definition is not exhaustive and should be read as indicating that the term person is used in a very broad sense. The definition expressly mentions individuals, companies and other bodies of persons. Article 3 (1) (b) assigns to the term "company" any body corporate or any entity that is treated as a body corporate for tax purposes. Thus it considers, for instance, that a foundation may fall within the definition of person.

The question arises whether a tax group may constitute, as such, a person for tax treaty purposes. This arose particularly in the Netherlands as regards the fiscal unity regime in force up to 1 January 2003. Under the regime in force in the Netherlands before 1 January 2003, the fiscal unity implied that the corporate income tax was levied as if the subsidiaries were fully integrated into the parent company and therefore, ceased to exist for corporate income tax purposes. Aside from the issue of tax treaty residence further analysed below, the consequence of this regime was that it could be argued that a fiscal unity would also qualify as a person it its own right for treaty purposes. Such argument commonly reads as deriving from the reasoning followed by Netherlands Courts.[250] In essence, the argument relied on the fact that the term company comprised any entity treated as a body corporate for tax purposes. Thus, within the scope of the fiscal unity, a parent and its group members would, in itself, constitute an entity indistinguishable for tax purposes.
Criticism has been made of this reasoning as regards the proper interpretation of the meaning of entity under Article 3 (1) (b). The term "entity" in this paragraph is commonly understood as referring to a civil law meaning whereas a fiscal unity exits solely by virtue and for the purposes of tax law. In other words, it appears that the requirement for Article 3 (1) (b) to apply is that one should have entities which constitute a subject of civil law, which is not the case of the fiscal unity which has no meaning outside the corporate income tax scope.[251]

[249] Para. 2 of the OECD MTC Commentary on Art. 3.
[250] In particular, in judgment 31008, of the *Hoge Raad* of 13 November 1996, the Netherlands Supreme Court appears to have concluded that a fiscal unity would qualify as a person in its own right.
[251] See Kees van Raad "Fiscale eenheid: Verdragswoonplaats moet voor moeder en dochtermaatschappij afzonderlijk worden beoordeeld" note BNB 2012/126, Frank P. G. Pötgens & Wiebe E.J. Dijkstra, "Cross-Border Fiscal Unities and Tax Treaties: Nothing New under the Sun?" 42 *Intertax* 2 Kluwer Law International BV (2014) p. 96.

The *Hoge Raad* confirmed[252] this reasoning by considering that, despite the fact that under the fiscal unity the subsidiaries are deemed to have been merged into the parent company (under the regime previously in force up to 1 January 2003) and all facts and circumstances relevant for corporate income tax purposes relating to the subsidiaries are deemed to relate to the parent company, this does not imply that the parent company and subsidiaries constitute a unit that is treated as a single body corporate and consequently, they do not constitute a person for treaty purposes, as this would not meet the conditions for being considered as an entity under Article 3 (1) (b). It further stated that in any event, it was certainly not the intention of the Contracting States to treat a fiscal unity as a person for treaty purposes.

It is submitted that from a tax perspective, groups do not give rise to separate legal entities nor do they constitute different taxable units which are treated as a body corporate according to the tax laws of the Contracting State in which they are organized. First of all and from a tax perspective, in principle, the general treatment of group members as taxable entities remains unaffected by group taxation regimes. Therefore, group members remain as persons for tax treaty purposes. And certainly from a corporate law perspective,[253] the nature of the subsidiaries as companies remains unchanged.
The group as a whole does not gain an independent personality according to the respective national laws and consequently, the group itself is neither a body corporate nor it is treated as a body corporate for tax purposes. Therefore, a tax group itself should not constitute a company or a person[254] for treaty purposes of Article 3 (1) (a) and (b). Instead, both parent company and the subsidiaries members of the group remain as persons for tax treaty purposes.[255]

7.4.3 Group taxation and tax treaty residence

Having considered that each one of the parent and the subsidiaries which belong to a group are considered persons for treaty purposes, the following question is to determine whether being included in the tax group can affect being regarded as residents under Article 4, OECD MTC.

---

[252] *Hoge Raad* case no. 10/05383 of 3 February 2012.
[253] This is true also in other areas of law.
[254] See Simon Patrick Link, "Application of tax treaties to companies subject to national group taxation regimes", in G. Maisto (ed.) *International and EC Tax Aspects of Groups of Companies, EC and International Tax Law Series*, Vol. 4, IBFD (2008), pp. 141.
[255] Similarly see M. van Dun, "De verdragsrechtelikke positie van de fiscale eenheid", *NTFR* 2012/2578, para. 1.1. Actually the *Hoge Raad* in its decision no. 37073 of 20 December 2002 also recognizes that parent company and subsidiaries within a tax group are separate persons. See also, Hans Mooij, "Netherlands Supreme Court Decides in Taxpayer's favour regarding the Application of Tax Treaties to a Fiscal Unity under Netherlands Domestic Tax Law", *Bulletin for International Taxation* 12 IBFD (2012), p. 638.

Tax treaty residence plays a central role[256] in tax treaties. Aside from its relevance for determining the personal scope of Article 1, tax treaties apply based on the residence of taxpayer and the source of income. In fact, most of the distributive rules[257] use the wording "resident of a Contracting State" as a criterion for distribution.[258] In addition, it is also up to the State of residence to provide the relief for double taxation according to the rules of Articles 23-A and 23-B, and it is also in the State of residence where a request for Mutual Agreement Procedure should be submitted in accordance with Article 25.

The definition of residence[259] is provided in Article 4 (1) as any person who, under the laws of the respective State, is liable to tax therein by reason of his domicile, residence, place of management or any other criterion of a similar nature. The interpretation of the meaning of liable to tax is not unequivocal.[260]

In all events, the intention seems to be to cover those who are subject to the most comprehensive form of taxation, i.e. to full liability to tax. The expression liable to tax connotes a person that is subject to one of the taxes mentioned in Article 2 of a tax treaty and it is immaterial if it pays tax. In other words, a person does not actually have to be paying tax in order to be "liable to tax". For the purpose of applying Article 4 (1), the relevance is the legal situation, which is to say, liability to taxation and not the fiscal fact of actual payment of tax.[261] Therefore, an entity that enjoys a complete exemption from tax should still be considered a resident of a certain State as long as such State could exercise jurisdiction to tax that entity on its worldwide income in accordance with one of the internationally accepted bases for full tax liability but exempts the entity from tax according to special provisions provided in its domestic tax law. In the case such exemption is repealed or the person no longer meets the requirements for the exemption, it may be

---

[256] See Stef van Weeghel, "The Tie-Breaker Rule Revisited: Towards a Formal Criterion?", in Luc Hinnekens and Phillipe Hinnekens (eds.) *A Vision of Taxes Within and Outside European Borders: Festschrift in honor of Prof. Dr. Frans Vanistendael,* Kluwer Law International (2008), pp. 961-964.

[257] The exception being Article 8 which uses "place of effective management".

[258] See Hans Pijl, "The Excluded Resident and the Term "Law/Laws" in Article 4 of the OECD Draft (1963) and the OECD Model (1977/2010), *Bulletin for International Taxation* 1, IBFD (2012), p. 3.

[259] See, in general, for the concept of corporate residence, Robert Couzin, *Corporate Residence and International Taxation*, IBFD (2002) or Jean-Marc Rivier, IFA General Report "The fiscal residence of companies", *Cahiers de Droit Fiscal International*, Vol. 72a, pp. 47-76.

[260] See, *inter alia*, Arnaud de Graaf and Frank Pötgens, "Worrying Interpretation of "Liable to Tax": OECD Clarification Would Be Welcome", 39 I*ntertax* 4, pp. 169-177; Richard Vann, "Liable to Tax and Company Residence under Tax Treaties"; G. Maisto (ed.) *Residence of Companies under Tax Treaties and EC Law*, EC and International Tax Law Series, Vol. 5 IBFD (2009) pp. 197-272. Also in this regard, paras. 8.6 and 8.7 of the Commentary to Article 4 of the OECD MTC reflect the diverging approaches among States.

[261] See in this regard, the judgments of the Indian Supreme Court in the case *Union of India v Azadi Bachao Andolan* (2003) 6 ITLR, p. 267 and the Authority for Advance Rulings in the case *Abdul Razak A Meman v CIT (International Taxation Mumbai), Akila A Meman v CIT (International Taxation Mumbai), Manish Bhatia v CIT (International Taxation Mumbai)* 9 ITLR (2005), pp. 155-156.

required to actually pay tax.[262] This is the approach[263] favoured in the OECD Commentary which, conversely, considers that neither a transparent entity nor an entity which although opaque benefits from a total (and unconditional) exemption, qualify as residents under Article 4.[264]

Considering the above, it is relevant to analyse the effect that group taxation regimes may have in the residence status of group members. The crux of the issue regarding group taxation regimes[265] is who should be considered as liable to tax: the group as such or its group members individually? Do the group members remain "liable to tax" or, otherwise, their tax status is affected by the fact of belonging to a tax group? Again the issue depends from the outset on the type of tax group regime at stake. Those questions will arise typically, in a tax group regime which provides for a high degree of consolidation of its group members.

---

[262] See Philip Baker, *Double Taxation Conventions*, Sweet & Maxwell, 3rd edition Loose Leaf, p. 4-2/2 or David A. Ward et al. "A Resident of a Contracting State for Tax Treaty Purposes: A Case Comment on Crown Forest", 44 *Canadian Tax Journal* 2/2, pp. 418-422.

[263] A broader interpretation of liable to tax considers that residence of a State for treaty purposes arises as long as a person has a personal attachment to tax that may result in him becoming subject to full tax liability. According to this interpretation, tax exempt persons can be considered as resident for meeting the liability to tax requirement that must also be possible for persons who are not considered as taxable entities in the first place. Therefore, it considers irrelevant whether a person is first considered a taxpayer and afterwards exempt from tax or whether it is not considered a taxpayer in the first place. This is based on the assumption that the language used in Article 4 (1) – *liable to tax by reason of* - does not mean that the criteria mentioned are the cause of tax liability itself. An emphasis is placed on the fact that access to treaty benefits should merely be based on the existence of any criteria that implies a close connection to a State. Neither actual taxation nor the qualification as taxable entity is considered to be a requirement under Article 4 (1) but only the existence of one of the enumerated criteria (or one of a similar nature). It is respectively submitted that, although challenging, this interpretation does not fit in with the wording of Article 4 (1) that specifically requires a person to be liable to tax and, accordingly, the taxability of the entity is required. See Klaus Vogel, *On Double Taxation Conventions: a Commentary to the OECD-, UN- and US Model Conventions for the Avoidance of Double Taxation of Income and Capital with particular reference to German Treaty Practice* (Kluwer 3rd edition 1997), p. 229 or Michael Lang, "Taxation of Income in the Hands of Different Taxpayers from the Viewpoint of Tax Treaty Law", *Bulletin-Tax Treaty Monitor* 12, IBFD (2001), pp. 597-598. Following this interpretation see the Indian judgment in case *Assistant Director of Income Tax v Green Emirate Shipping & Travels*, (2005) 9 ITLR pp. 1-10, which observes that "*as long as a person has such locality-related attachments which attract residence type taxation, that person is to be treated as resident […]*".

[264] See para. 8.6 of the Commentary to Article 4 of the OECD MTC which provides that:

> "For example, pension funds, charities and other organisations may be exempted from tax, but they are exempt only if they meet all of the requirements for exemption specified in the tax laws. They are, thus, subject to the tax laws of a Contracting State. Furthermore, if they do not meet the standards specified, they are also required to pay tax."

This is also confirmed by the statement in para. 6.12 of the Commentary to Article 1 of the OECD MTC regarding the tax treaty entitlement of Collective Investment Vehicles.

[265] Naturally from the moment that it is concluded that a tax group as a whole is not a person under Article 3 (1) (a), it does not satisfy the requirements of Article 1 and therefore, is not entitled to treaty benefits.

A first alternative, naturally, is to consider that the group itself constitutes a taxable entity and, therefore, should be treated as such as a resident for treaty purposes. Naturally that as from the moment it is determined that the fiscal unity as such does not constitute a company or a person it should also not be a resident for treaty purposes.[266] As a consequence, residence for treaty purposes under Article 4 should be determined separately for each of the companies in the tax group.[267]

A second possibility is that in the situations where consolidation occurs at the level of the parent company and there is high degree of integration under the consolidation regime, one would consider that the profits belong to the parent company, this is the member of the group which is subject to liability to tax with the consequence that the subsidiary members of the group would lose their tax status as a taxable subject and, therefore, could not claim treaty benefits.[268] In fact, under a tax treaty modelled in accordance with the OECD MTC, resident is defined as any person liable to tax by reference to the respective domestic laws. If a subsidiary which is a group member of a consolidation regime is considered to be merged or a division of its parent company doubts will likely arise as regards its status for claiming treaty entitlement.
The fundamental discussion on this topic occurred with the Netherlands fiscal unity regime. As previously mentioned, under the regime in force before 1 January 2003,[269] the fiscal unity implied that the corporate income tax was levied as if the subsidiaries were fully integrated into the parent company and therefore ceased to exist for corporate income tax purposes.[270] As a consequence, participating companies were considered to lose their personal tax liability or, in other words, they were not considered as being liable to tax also

[266] Similarly, see Kees van Raad "Fiscale eenheid: Verdragswoonplaats moer voor moeder en dochtermaatschappij afzonderlijk worden beoordeeld" note *BNB* 2012/126 or Simon Patrick Link, "Application of tax treaties to companies subject to national group taxation regimes", in G. Maisto (ed.) *International and EC Tax Aspects of Groups of Companies, EC and International Tax Law Series*, Vol. 4, IBFD (2008), p. 142.
[267] See Hans Mooij, "Netherlands Supreme Court Decides in Taxpayer's favour regarding the Application of Tax Treaties to a Fiscal Unity under Netherlands Domestic Tax Law", *Bulletin for International Taxation* 12 IBFD (2012), p. 638.
[268] See, in particular, *Hoge Raad* case no. 31008, of 13 November 1996.
[269] Another point of discussion under the rules of the Netherlands fiscal unity, for the purposes of the discussion of the residence of the companies, whether the place of effective management was determined separately based on the relevant circumstances of each company, or whether the fact that under the old regime the upon the merger of a subsidiary company with its parent company, in order to determine the residence of the parent company, it was necessary to take into account the circumstances of the subsidiary. In the *Hoge Raad* case no. 10/05383 of 3 February 2012, this Court clarified that the effective management activities of the subsidiary were not relevant for establishing the residence of the parent company.
[270] See M. Van Dun, "De verdragsrechtelikke positie van de fiscale eenheid", *NTFR* 2012/2578, or Rudolf J. de Vries, IFA Netherlands Report, IFA Netherlands Report "Group Taxation", *Cahiers de droit fiscal international*, Vol. 89b, (2004), pp. 467-468. Differently, see Pieter van der Vegt, "Country Reports: Netherlands" in, G. Maisto (ed.) *International and EC Tax Aspects of Groups of Companies* - EC and International Tax Law Series, Vol. 4, IBFD (2008), pp. 392-393 who considers that the case law of the *Hoge Raad* on this issue does not support the view that fiscal unity subsidiaries were not considered residents for tax treaty purposes.

for tax treaty purposes.[271] This interpretation had considerable impact as regards the application of tax treaties for subsidiary members of a fiscal unity when obtaining income from foreign sources on the application of tax treaties, also due to the differences in the attribution of income between the Netherlands and the State where the income was obtained as analysed below.

Also Australia which, as analysed, considers that within its consolidation system – the Single Entity Rule -, subsidiaries which are members of the group are treated as divisions of the parent company could lead to the question whether they retain their status as tax subjects or rather lose their status to the parent company.[272] The interpretation followed is that the subsidiary becomes part of the parent company but its effects are limited for the determining of the income tax of the consolidated members with no implication of tax treaties and, in particular, when a group member receives income from another Contracting State.[273] The inclusion within a tax group does not turn group members into transparent entities.[274]

From an interpretation of tax treaties and following what is in fact the preferential approach under the OECD MTC, there is no requirement of actual or effective taxation in order for a company to be considered as being liable to tax. Group taxation regimes also do not provide for a total and unconditional exemption of its group members. In fact and as an exception to the main rule of treating each taxpayer separately, group members are subject to strict requirements which, if not met, lead to those entities to leaving the group and being subject to the general tax regime. They are not effectively taxed only by virtue of special provisions in the domestic legislation of the State of residence. In that sense and although the levying of the tax occurs at the level of the parent company, one can assume that the subsidiary

---

[271] As from 1 January 2003, it is clearly stated that a subsidiary forming part of the fiscal unity remains subjectively taxable for corporate income tax purposes and consequently, is entitled to claim tax treaty benefits. A fundamental reason for the revision of the fiscal unity regime was to make clear that subsidiaries kept their tax status, in particular, for the purpose of triggering the application of tax treaties.

[272] See Antony Ting, *The Taxation of Corporate Groups under Consolidation: An International Comparison,* Cambridge University Press (2012), pp. 255-256.

[273] The interpretation of the Australian Tax Office contained in Taxation Ruling 2004/11 is that:

> "12. The SER ensures that the members of a consolidated group are treated as a single entity for the purpose of applying income tax laws to that group. The SER does not affect the application of those laws to an entity outside of the consolidated group. The income tax position of entities outside the group will not be affected by the SER when they deal or transact with a member of a consolidated group."

[274] Differently, see Simon Patrick Link, "Application of tax treaties to companies subject to national group taxation regimes", in G. Maisto (ed.) *International and EC Tax Aspects of Groups of Companies, EC and International Tax Law Series*, Vol. 4, IBFD (2008), p. 142 who appears to consider that subsidiary members of a tax group resemble transparent entities and do not meet the requirements for being treated as residents for treaty purposes because they must be subject to effective taxation. I disagree with this view. The treatment of subsidiaries within a tax group resembles much more an exemption granted to non-transparent entities which, therefore, would be the requirement of liability to tax which does not require effective taxation pursuant to para. 8.6 of the Commentary to Art. 4 of the OECD MTC.

status of not paying tax is merely suspended for the duration of the tax group.[275] In that regard it can be concluded that, in principle, group members are to be considered residents for tax treaty purposes. In this sense, membership of a tax group will not affect the taxable entity status of its group members.[276] They are still treated as separate taxpayers even if the levying of the tax may occur elsewhere within the group (e.g. at the level of the parent of the group).[277] Such subjectivity liability to tax is maintained during the whole period in which the tax group is in force.
Overall it appears that currently, group members of a tax group maintain their tax status and are considered as resident for the purposes of claiming treaty entitlement.[278]

7.4.4 Dual resident companies and tax groups

The tax treaty definition of resident as laid down in paragraph 1 is based on the internal law definitions of the two treaty States of residence. It may occur, however, that based on each internal tax law rules, a company ends up being a resident of both treaty States. Dual residence results from the treatment of one taxpayer by each of the two Contracting States as a person subject to full tax liability because of his residence. The residence conflict arises either because the two States adopt a different criterion of residence, because, they give a different meaning to the same criterion or even because they give the same meaning to the same criterion. In such case of dual residence[279] it is necessary to determine the State of residence for treaty purposes given that the functioning of the allocation rules and the

[275] See Frank P. G. Potgens & Wiebe E.J. Dijkstra, "Cross-Border Fiscal Unities and Tax Treaties: Nothing New under the Sun?", 42 *Intertax* 2 Kluwer Law International BV, the Netherlands, p. 100. These authors are of the view that, with reference to the Netherlands fiscal unity, even if one would consider under the previous regime that the subsidiary would no longer be considered as a taxable subject, also in that case such status would be suspended, meaning that it would still meet the criteria for being liable to tax under Art. 1 (1) and its interpretation under the Commentary to the OECD MTC.

[276] Eventually, the only exception may be the case of Poland where the tax authorities have occasionally expressed the view that companies that register as a tax group cease to be treated as separate taxpayers for corporate income tax purposes, meaning that the group as such is treated as a separate taxable entity. However, this does not derive from the law and therefore, it is not entirely clear whether the members of a tax group in Poland retain their taxable status or not. See Patrycia Gozdziowska, Blazej Kuzniacki & Tomasz Wickel, IFA Report Poland "Qualification of Taxable Entities and Treaty Protection", *Cahiers De Droit Fiscal International,* Vol. 99b, p. 639. Differently and arguing that in Poland, each group member is independently entitled to tax treaty benefits see, Lukasz Adamczyk, "Country Reports: Poland" in, G. Maisto (ed.) *International and EC Tax Aspects of Groups of Companies* - EC and International Tax Law Series, Vol. 4, IBFD (2008), pp. 434.

[277] See Michael Lang & Claus Staringer, IFA General Report "Qualification of Taxable Entities and Treaty Protection" *Cahiers de Droit Fiscal International* Vol. 99b (2014), p. 33.

[278] It should be noted that most Australian treaties adopt a different definition of resident from the OECD MTC, departing from the liable to tax requirement to stating that a resident in Australia is a person "who is resident of Australia for the purposes of Australian tax."

[279] See Francisco de Sousa da Camara, "A Dupla Residencia das Sociedades a Luz das Convencoes de Dupla Tributacao", in *Planeamento e Concorrencia Fiscal Internacional*, Fisco/Associacao Portuguesa de Consultores Fiscais, (2003), pp. 213-261, Kees van Raad, "Dual Residence", *European Taxation* 8, IBFD (1988), pp. 241-246.

methods for relief of double taxation require that there is only one residence State.[280] Paragraph 3 of Article 4 of the OECD Model provides for a *tie-breaker* rule, which determines that a company will be a treaty resident of the State in which it has its effective management,[281] which will be considered the winning State, i.e. the State of residence which is relevant for treaty purposes. The possible impact of dual residence and group taxation is relevant to be analysed from the perspective of the loosing State.[282] The question is not only to determine if tax treaties can affect the application of group taxation rules in the losing State but also how can they affect such application, i.e., what are the consequences.

A possible situation may involve a dual resident subsidiary with place of incorporation in same State of the parent company but its effective management in another State.

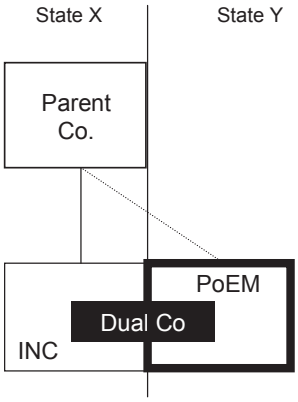

In principle, the application of the tax group would not be jeopardized if the conditions for the group member subsidiary which is a dual residence company are merely determined based on the domestic meaning of residence. The consequence will be that, for the purposes of offsetting profits and losses, the income (positive or negative) would be attributed to the parent company of the group. The inclusion of the income of the subsidiary in the taxable

[280] See Michael Lang, *Introduction to the Law of Double Tax Conventions*, Linde Verlag/IBFD (2010), p. 66.
[281] See, *inter alia*, for a discussion on the meaning of place of effective management, John F. Avery Jones, "2008 OECD Model: Place of Effective Management – What One Can Learn form the History", *Bulletin for International Taxation* 5/6 IBFD (2009), pp. 183-186, Jacques Sasseville, "The Meaning of Place of Effective Management"; G. Maisto (ed.) *Residence of Companies under Tax Treaties and EC Law*, EC and International Tax Law Series, Vol. 5 IBFD (2009) pp. 287-302, I.J.J. Burgers, "Some Thoughts on Further Refinement of the Concept of Place of Effective Management for Tax Treaty Purposes", 35 *Intertax* 6/7 (2007), pp. 378-386 and John F. Avery Jones, "Place of Effective Management as a Residence Tie-Breaker", *Bulletin for International Fiscal Documentation* 1 IBFD (2005), pp. 20-32.
[282] See Francisco Avella, "Dual Residence, Group taxation and Tax Treaty Law," in Matthias Hoffstatter and Patrick Plansky (eds.), *Dual Residence in Tax Treaty Law and EC Law*, Series on International Tax Law Univ.-Prof. Dr. Michael Lang (editor), Volume 60, Linde Verlag 2009, p. 297.

income of the group if not prevented – notably[283] by taking into account the relevant residence of the subsidiary for treaty purposes – but could, however, give rise to situations of double taxation or double deduction of losses.

Examples of this situation can be found in the Netherlands involving the application of the fiscal unity regime. A first example[284] involved a Netherlands parent company with a Netherlands incorporated subsidiary which was effectively managed in the UK. For the purposes of the tax treaty concluded between the Netherlands and the UK, the subsidiary was considered to be resident in this latter State. The Netherlands companies had formed a fiscal unity and the dispute was whether the loss incurred by the subsidiary could be attributable to the parent company under the consolidation of the respective income. The position followed by the tax authorities was negative. As the company was actually resident in the UK, it could not be part of the fiscal unity and, consequently, the losses incurred should not be relevant for determining the profit of the fiscal unity. Arguably, because of the deemed merger of the subsidiary into the parent company - and the consequent lack of independent personality of this company for Netherlands tax purposes - the Supreme Court considered irrelevant the dual residence of the subsidiary and the fact that this company was only resident in the UK for treaty purposes - and ultimately considered that the lost residence in favour of UK would not affect the formation of the fiscal unity. Accordingly, the UK loss was not eliminated from the results of the fiscal unity.

A second example is in another judgment of the *Hoge Raad.*[285] This case concerned a Netherlands parent company in the form of a BV (a private company with limited liability) ("Company A") which entered into a fiscal unity with a subsidiary company incorporated in the Netherlands but effectively managed in Ireland ("Company B"). The question raised was whether the loss made by B could be taken into consideration at the level of A for tax treaty purposes. The *Hoge Raad* started by observing that for Netherlands tax purposes, corporate income tax was levied as if company B was merged with Company A. Therefore, the Court's reasoning was that, due to the fiscal unity regime, as B carried on an enterprise in Ireland, according to Netherlands tax law on attribution of income, A was deemed to have a PE in Ireland.

---

[283] Other States such as the US have rules to prevent the double use of losses through the use of Dual consolidated losses regulations (§ 1.1503-2). These rules provide for a general prohibition of dual consolidated loss from offsetting the taxable income of a domestic affiliate. More specifically, these rules provide that a dual consolidated loss of a dual resident corporation cannot offset the taxable income of any domestic affiliate in the taxable year in which the loss is recognized or in any other taxable year, regardless of whether the loss offsets income of another person under the income tax laws of a foreign country and regardless of whether the income that the loss may offset in the foreign country is, has been, or will be subject to tax in the United States.

[284] *Hoge Raad* case no. 24738 of 29 June 1988, BNB 1988/331.

[285] *Hoge Raad* case no. 31 008, of 13 November 1996. See for a description of the case Gijs Fibbe, *EC Law Aspects of Hybrid Entities*, IBFD Doctoral Series no. 15 (2009), pp. 198-200.

Further to Article 22 (1) of the 1969 tax treaty concluded between Netherlands and Ireland, the Netherlands was allowed with respect to its residents to take into account income or capital from a PE located in Ireland. Paragraph 2 of the same article provided that the Netherlands had to exempt such (positive) income. Accordingly, the combined result of the dual resident company and the Netherlands attribution rules (i.e. under the fiscal unity regime), was that the loss was indeed used to decrease the taxable income of the parent company[286] even that it could also be used in Ireland. For the Court, the outcome would not be different even if one would deem the subsidiary to be resident only in Ireland and accordingly the profits would be taxed only in Ireland. The conclusion of the *Hoge Raad* was that:[287]

> […] also when assumed that B according to Article 2, paragraph 1, letter f, of the Treaty is to be recognized as a person that is effectively managed in Ireland and the income of this enterprise is accordingly solely taxable in Ireland, this does not mean that the Netherlands Fiscal Unity rules are not applicable […]

Ultimately, this judgment and similarly the one previously referred to, leads to a possibility of double use of losses[288] due to not taking into account the relevant residence for tax treaty purposes.[289] Arguably, the interpretation of the Supreme Court of the treaty provisions in this case[290] should be subject to criticism. For the *Hoge Raad*, business profits obtained by the subsidiary were treated as profits of the parent company. I agree with Van Raad

---

[286] Ultimately, this meant that (foreign) losses incurred by dual resident subsidiaries which, in accordance with the applicable tax treaty, were effectively resident in the other State, could be deducted in the Netherlands if the foreign subsidiary was included in the fiscal unity, while such losses could not be used in the Netherlands if the subsidiary were not part of the fiscal unity.

[287] See translation in Gijs Fibbe, *EC Law Aspects of Hybrid Entities*, IBFD Doctoral Series no. 15, 2009, p. 200.

[288] The loss was used in the Netherlands under the fiscal unity and would likely be used in Ireland in the same or in another year.

[289] Since the change of the regime as of 1 January 2003, a subsidiary in a fiscal unity needs to be resident in the Netherlands under Netherlands domestic tax law as well as for tax treaty purposes. Thus, as the incorporation fiction no longer applies to Netherlands incorporated entities for purposes of the fiscal unity regime, such situations as referred to above no longer occur.

[290] Differently, the judgement of the *Hoge Raad* in case no. 28.260 of 17 February 1993, where this Court reached a different outcome. The case did not involve a fiscal unity. It involved a BV which was incorporated under Netherlands civil law and therefore, also resident for tax purposes in the Netherlands, which was effectively managed in Ireland. Pursuant to the Double Tax Treaty concluded between Netherlands and Ireland the relevant treaty residence under the tie-breaker rule was in Ireland. The taxpayer's claim was whether the loss incurred by this company could be offset for Netherlands corporate income tax purposes. The Court concluded that given that the company was resident in Ireland for treaty purposes then pursuant to Art. 5 (1) of that Treaty (which corresponds to Art. 7 (1) of the OECD MTC) Ireland had exclusive taxing powers under the company's activities (unless there was a PE in the Netherlands) with the consequence that the Netherlands could not take into account any profits or losses regarding that company. See on this case, M. Van Dun, "De verdragsrechtelikke positie van de fiscale eenheid", *NTFR* 2012/2578 para. 2.3, or Pieter van der Vegt, "Country Reports: Netherlands" in, G. Maisto (ed.) *International and EC Tax Aspects of Groups of Companies* - EC and International Tax Law Series, Vol. 4, IBFD (2008), p. 391.

however, that this interpretation followed by the Court was incorrect.[291] The proper application of this provision means that profits earned by this company should be taxed only in its State of residence.[292] The relevant residence of the subsidiary was Ireland and, in that sense, Ireland would have exclusive right to tax in the absence of a PE in the Netherlands. In other words: pursuant to the application of the Tax Treaty concluded between the Netherlands and Ireland, the taxation of the parent company in the Netherlands could not take into account the losses incurred by the subsidiary. If the subsidiary was in fact resident in Ireland, only Ireland could take into account the respective gains/losses. And to determine where those gains/losses would be taxed it would be necessary to determine the relevant treaty residence, something that the *Hoge Raad* considered to be irrelevant relying exclusively on Netherlands domestic law rules on the fiscal unity.

In addition, it is relevant to look more closely to Article 5 of the relevant Treaty dealing with the taxation of business profits which set out:

> 1. The profits of an enterprise of one of the States shall be taxable only in that State unless the enterprise carries on business in the other State through a permanent establishment situated therein.

Essential to this interpretation is the meaning of the words "profits *of*" and enterprise *carries on"*. It appears clearly that the profits are profits *of* the subsidiary B resident in Ireland and not profits of the parent company A. Also that the business is *carried on* by B in its respective State of residence (Ireland) and not by company A in Ireland.

In addition, and as observed by Van Raad[293], those two terms are not defined in the Treaty itself and therefore, pursuant to the rule of interpretation of Article 2 (6) of this Treaty (similar to Article 3 (2) of the OECD MTC):

> As regards the application of the Convention by either of the States, any term not otherwise defined shall, unless the context otherwise requires, have the meaning which it has under the laws of that State relating to the taxes which are the subject of this Convention

This provision provides for a general rule of interpretation[294] for cases of undefined terms used in a tax treaty.[295] It states that when applying or interpreting the treaty, any term not defined must, unless the context otherwise requires, have the meaning that it has under the domestic law of the Contracting States. Although this provision is highly relevant for interpretation purposes, its exact scope has been strongly disputed in the international tax

---

[291] See C. van Raad, note on *Hoge Raad*, 13 November 1996, No. 31 008, *BNB* 1998/47c. See also critics by Pieter van der Vegt, "Country Reports: Netherlands" in, G. Maisto (ed.) *International and EC Tax Aspects of Groups of Companies* - EC and International Tax Law Series, Vol. 4, IBFD (2008), p. 393.

[292] Concurrently, Frank P. G. Potgens & Wiebe E.J. Dijkstra, "Cross-Border Fiscal Unities and Tax Treaties: Nothing New under the Sun?", 42 Intertax 2 Kluwer Law International BV, the Netherlands, p. 103.

[293] See C. van Raad, note on *Hoge Raad*, 13 November 1996, No. 31 008, *BNB* 1998/47c.

[294] For this issue see, *inter alia*, John Avery Jones, "Article 3(2) of the OECD Model Convention and the Commentary to it: Treaty Interpretation", 33 *European Taxation* 8 (1993), pp. 252-257.

[295] Para. 11, OECD Commentary on Art. 3.

literature. It requires a comparison[296] to be made between the meanings a term has, on the one hand, in the context of the tax treaty in which the expression is used and under the domestic law of the State involved, on the other. The interpretation of the expression "unless the context otherwise requires" determines the hierarchical place[297] assigned to the reference to domestic law in comparison with any other possible interpretative elements.
With regard to the meaning of "context" under Article 3 (2) - and irrespective of the position adopted[298] - the fact is that following the interpretation proposed by the Hoge Raad would lead to situations of double taxation[299] or double non-taxation, that is, that this is a situation where the context, which clearly includes the aims of the tax treaty, would require a different interpretation.

The other relevant scenario to be considered is the case in which the dual residence is at the level of the parent company and the place of effective management is located in a different State from the subsidiary.

---

[296] See Kees van Raad, "Interpretation and Application of Tax Treaties by Courts", 36 *European Taxation* 1 (1996), p. 4.

[297] See Edwin van der Bruggen, "Unless the Vienna Convention Otherwise Requires: Notes of the Relationship between Article 3 (2) of the OECD Model Convention and Articles 31 and 31 of the Vienna Convention of the Law of Treaties", 43 *European Taxation* 5 (2003), p. 143.

[298] There are two different views on how to interpret Art. 3 (2) which may be summarized as follows:

(i) One of the views is that the interpretation of the words "unless the context otherwise requires" in Art. 3 (2) has to be seen as an exception to the general rule that any treaty term used but not defined in the DTC should have the meaning it has under the laws of the Contracting States applying the treaty. This approach seems to follow an interpretation of Art. 3 (2) more in accordance with its terms: reference to domestic law should be made unless there are considerable arguments drawn from the context that determine otherwise. See, *inter alia*, John Avery Jones et al., "The Interpretation of Tax Treaties with Particular Reference to Article 3 (2) of the OECD Model", *British Tax Review* (1984), pp. 105-108.

(ii) The opposite view looks primarily at the context of a tax treaty. This approach would minimize the need for an interpretation that repeatedly refers to the domestic law of one of the contracting states. Therefore, in order to avoid the negative consequences of the interpretation of undefined terms by reference to domestic law a tax treaty should be interpreted according to its context. The reference to the domestic law should then only occur in case the interpretation of a term in the context of a treaty proves to be impossible. For this perspective, the term "context" would have a very broad meaning, including all the historical, systematic and teleological aspects such as would allow that almost in every case it would be possible to establish an interpretation that is guided by the context. Recourse to domestic law would only occur rarely and in the cases where the tax treaty itself makes reference to domestic law. See in particular Michael Lang, *The Application of the OECD Model Tax Convention to Partnerships: A Critical Analysis of the Report Prepared by the OECD Committee of Fiscal Affairs* (Linde Verlag Band 11, 2000), pp. 20-28.

[299] Situations of double taxation may arise in the case the dual resident subsidiaries are profit making. In that case, it may occur that the income is taxed in both States.

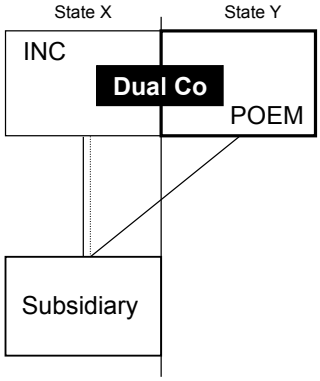

In this case, the income of the subsidiary attributed to the parent company could not be taxed by the State X as the losing State because the conflict of dual residence would be resolved in favour of State Y. State X could only tax[300] the income in the case it was considered[301] that the parent company effectively resident in State Y had a PE in State X.[302]

This demonstrates that in situations involving tax groups it is indeed necessary to determine the relevant residence for treaty purposes. Not only from the perspective of the allocation of taxing rights and the application of the relevant distributive rules as demonstrated above, but also for the application of the non-discrimination article as will subsequently be analysed.

7.4.5 Tax groups and income attribution

As referred to previously, one of the aspects of group taxation regimes is the possibility to aggregate the income of its group members. This corresponds with one of the main advantages of group taxation regimes as it allows offsetting profits with losses within the group. It then becomes relevant to analyse the possible interaction between tax treaties and income attribution pursuant a group taxation regime.

---

[300] Similarly, Frank P. G. Potgens & Wiebe E.J. Dijkstra, "Cross-Border Fiscal Unities and Tax Treaties: Nothing New under the Sun?", 42 Intertax 2 Kluwer Law International BV, the Netherlands, p. 103 and Francisco Avella, "Dual Residence, Group taxation and Tax Treaty Law," in Matthias Hoffstatter and Plansky (eds.), *Dual Residence in Tax Treaty Law and EC Law*, Series on International Tax Law Univ.-Prof. Dr. Michael Lang (editor), Volume 60, Linde Verlag 2009, p. 311.

[301] This was the precisely the situation in the judgment of the *Hoge Raad* in case no. 37.073, of 20 December 2002. The case involved a fiscal unity with a dual resident parent company. A company incorporated in the Netherlands and effectively managed therein up to 1991 moved to the Netherlands Antilles. Relevant for the present analysis was the fact that the Court considered that the relevant residence was in the Netherlands Antilles. The fact that the subsidiaries were considered to merge into the parent company led to a fiction of PE of the parent company in the Netherlands.

[302] In those cases of dual resident parent company of the group, the taxation is limited to the profits that the parent company obtains itself and through its subsidiary which are attributable to the PE. See similarly, C. Van Raad, *WFR* 1989/139.

First, it is relevant to analyse how the possibility of income aggregation that typically occurs by combining the group member's profits or losses may affect the tax treaty entitlement of those members of the group. Furthermore, it is also relevant to determine whether tax treaties cause any impact in the case of cross-border group regimes and in particular, the interaction between the tax treaties distributive rules and the possibility to attribute income on cross-border situations.

7.4.5.1 Income attribution and treaty entitlement

The eligibility to tax treaty benefits may also be dependent on the link between a certain type of income and a particular person. Tax treaties contain distributive rules that allocate taxing rights between the source State and the residence State. They do not create taxing rights and generally restrict the application of the domestic tax laws of States. The taxation is then based on domestic laws. The rules on attribution of income are in general not covered[303] in tax treaties[304]. As questions on attribution of income are not dealt in treaties[305], reference has to be made to the corresponding domestic tax rules pursuant to the application of Article 3 (2) of the OECD MTC. Frequently, the absence of these rules on attribution of income in tax treaties will not raise any issues because the views on how States allocation income will not vary.

However, as States are in principle autonomous to allocate the income to a subject for tax treaty purposes, conflicts between States may arise where the same income is allocated to different persons by the States

It is interesting to note that the OECD MTC is structured based on a separation between tax liability and ownership of income. In fact, while treaty residence under Article 4 is defined by reference to liability to tax the distributive rules make reference to a particular link of a person which the specific income.[306]

---

[303] See Kees van Raad, "Five Fundamental Rules in Applying Tax Treaties", in *Planeamento e Concorrência Fiscal Internacional*, Associação Portuguesa de Consultores Fiscais / Fisco (2003), p. 347. For an analysis of the fundamental problems related with the lack of rules in tax treaties regarding the attribution of income and for a proposed new approach see Joanna Wheeler, "The Missing Keystone of Income Tax Treaties", 3 *World Tax Journal* 2 IBFD (2011), pp. 247-367

[304] See the critical remarks made by Jörg Manfred Mössner, "Gewerbesteuerliche Organschaft zwischen einem in Grossbritannien ansassigen Organtrager und einer inlandischen Organgesellchaft uber eine inlandische Zwischenholding, *IStR*, pp. 348-349.

[305] The references in the Commentary are scarce. The only solution which the OECD seems to give regarding the conflicts between States on the attribution of income is the recourse to the mutual agreement procedures stated in para. 30 of the Commentary to Article 10 of the OECD MTC. See in this regard Joanna Wheeler, "The Missing Keystone of Income Tax Treaties", 3 *World Tax Journal* 2 IBFD (2011), p. 256.

[306] See Joanna Wheeler, *The Missing Keystone of Income Tax Treaties*, IBFD Doctoral Series no. 23, (2012), p. 46.

The income attribution pursuant to a tax group is first of all dependent on the respective regime. Tax treaties are applicable to persons who, being resident in one State, receive income from sources located in the other State. For treaty purposes, for instance, for the purposes of dividends, interest or royalties both the receiver and the payer of the income must be residents in the respective State. If, under the tax group regulations, the group members lose their tax liability in favour and as a consequence of the income aggregation at the level of the parent company, it may be considered that, pursuant to their domestic laws, they are not resident for tax purposes and, accordingly, they do not meet the conditions under Article 4 of the applicable tax treaty. One may, however, consider that, as the income is attributed to parent company and the subsidiaries lose their tax independent status, the parent company may in turn claim the treaty benefits.

However ,the issue is that most of the allocation rules in tax treaties provide for a link between the income and its recipient. Articles 6, 13, 14, 15, 16 and 17, refer to income which is *"derived by"*, Articles 10, 11, 12, 18 and 19 refer to income *"paid to"*, Articles 20 and 21 refer to "*receiving or recipient*" whilst Article 7 makes reference to "*profits of*". Eventually only in this latter case could it be argued that it is possible to allocate income to a person other than the legal recipient, although Article 7 still makes reference to profits of a company, a case in which one would have to consider that the profits are actually being obtained by the parent company. The consequence is that ultimately, the income of the subsidiary from foreign sources will not fall within the scope of a specific distributive rule as the income cannot be considered as being derived by, or paid to or received by the subsidiary.

Most notably this is the case of income that a tax group member subsidiary obtains from sources located in other treaty country. The person to whom the income is allocated under domestic laws – the parent company - is not the legal recipient of the income and therefore, the distributive rules under the tax treaty cannot apply. The subsidiary receives this type of income, as the recipient of the income but not a tax treaty resident. Conversely, the parent company, to which the income is allocated, is resident for treaty purposes but is not the recipient of the income. The may lead to double taxation issues deriving from the application of the tax treaty allocation rules. In this sense, possible conflicts of characterization may arise when one State applies a tax treaty considering its domestic fictitious rules within the context of a tax group – which determine that the profits of the subsidiaries are taxed at the level of the parent company - while the other State applies the tax treaty based on actual conditions.

An example on this issue is to be found in the previously mentioned case law of the *Hoge Raad*[307] as concerns the application of the Netherlands domestic attribution rules of the fiscal unity within the treaty context. The consequence of the attribution of income to a parent company (with the consequent non-recognition of the subsidiaries which are part of

[307] Hoge Raad, case no. No. 31 008, of 13 November 1996.

a tax group) leads to the fact that only the parent company could qualify as a treaty resident for the purposes of Article 4 OECD MTC. An interpretation of the treaty provisions would lead to a situation where income paid to the subsidiary is not paid to a resident of the other State:[308] Assume that a fiscal unity exists between a parent company and its subsidiary both of which are resident in the Netherlands. The subsidiary has an interest claim over a debtor resident in Belgium. In accordance with Article 11 (1) of the Double Tax Treaty concluded between Netherlands and Belgium, the interest is taxable in principle in the residence State of the recipient (Netherlands). In addition, under paragraph 2 of Article 11, Belgium is entitled to withhold tax at a rate of 10%. However, the requirement for the application of Article 11 is that the interest is paid from a resident of one State (Belgium) to a resident of the other State (Netherlands). In this case, the requirement would likely not be met under the old fiscal unity regime if one assumes that the parent company is the entity which is considered resident for tax treaty purposes. In this example, the person that actually receives the income – the subsidiary – would not be treaty entitled due to the loss of tax liability as an effect of the fiscal unity. Similarly, the parent company could not claim treaty benefits because, for civil law purposes, it is not the recipient of the interest.

Another example[309] to illustrate this problem can be conceived, now involving three States. A resident company in one State (State R) which obtains royalties from source in another State (Stare S) is held by a company resident in a third State (State X) through a PE located in State R to whom those shares are effectively connected. The PE and the subsidiary form a tax group under the local rules of State R. The potential problem of allocation of income in this case involves the three States: from the perspective of the source State (State S) the royalties are paid to the subsidiary in State R. For the purposes of State R, the income is allocated to PE as the head of the tax group (who in any event is not a resident entity in State R and therefore. cannot claim treaty benefits under the combined application of Articles 1 and 4 of the applicable tax treaty). Lastly and from the perspective of State X, the income is not allocated to the company in State X, thus, this company cannot claim treaty benefits.

Naturally, one possible alternative is the solution found in the Partnership Report[310] and the OECD Commentary on Partnerships[311] as regards classification conflicts. The proposed solutions – according to the OECD based on an interpretation of the treaty provisions – are that in certain situations States should deviate from their own domestic rules. In the case of a difference in the classification of an entity, the source State should then take into account,

---

[308] Similarly, Hans Pijl, IFA Report Netherlands "Conflicts in the Attribution of Income to a Person", *Cahiers de Droit Fiscal International*, Vol. 92b (2007) pp. 451-452.

[309] A somewhat similar example is provided by Michael Lang as regards the Organschaft, "Taxation of Income in the Hands of Different Taxpayers from the Viewpoint of Tax Treaty Law", *Bulletin – Tax Treaty Monitor*, 12 IBFD (2001), p. 597

[310] OECD report "*The Application of the OECD Model Tax Convention to Partnerships*" Issues in International Taxation no. 6, Committee on Fiscal Affairs (1999).

[311] See paras. 2 through 6.6 of the Commentary to Art. 1 of the OECD MTC.

as part of the factual context in which the treaty is to be applied, the way in which an item of income arising in its jurisdiction is treated in the jurisdiction of the person claiming the benefits of the treaty as a resident. If the entity does not qualify as a resident, the participants are the persons entitled to claim treaty benefits in the State where they are resident to the extent that the partnership's income is allocated to them for the purposes of taxation in their State of residence[312].

The application of the solutions of the Partnership Report to the case of tax groups, however, is questionable.[313] First of all, the solutions are limited to partnerships and it is uncertain whether (and to the extent) their application extends to other cases.[314] In addition, the Partnership Report deals with the attribution of income merely as an effect[315] of the discussion on entity classification.[316] The discussion on entity classification involves, in essence, determining who is the taxable unit, and the solution in the Report is to give priority to the State of residence. As previously mentioned, it is this State which decides whether the liability to tax is imposed on the partnerships or on the partner. The Report also deals with the conflicts in the characterization of income, in this case by giving preference to the source of that income. If the application of the Partnership Report to tax groups is questionable, it is also unlikely that the solutions provided in the Partnership Report could solve the issues deriving from income attribution[317] within the context of tax groups.[318]

---

[312] See paragraph 5 of the Commentary to Article 1 of the OECD MTC.

[313] See Frank P. G. Potgens & Wiebe E.J. Dijkstra, "Cross-Border Fiscal Unities and Tax Treaties: Nothing New under the Sun?", 42 *Intertax* 2 Kluwer Law International BV, the Netherlands, (2014), p. 95.

[314] In favour of the application of the Partnership Report to the case of trusts see R. Danon, "Conflicts on the Attribution of Income involving Trusts under the OECD-Model Convention, 34 *Intertax* 2 Kluwer Law International BV (2004), pp. 210-222.

[315] See Joanna Wheeler, *The Missing Keystone of Income Tax Treaties*, IBFD Doctoral Series no. 23, (2012), p. 23.

[316] This is evident from para. 8.8 of the Commentary to Art. 4 of the OECD MTC when stating that:

> "Where a State disregards a partnership for tax purposes and treats it as fiscally transparent, taxing the partners on their share of the partnership income, the partnership itself is not liable to tax and may not, therefore, be considered to be a resident of that State. In such a case, since the income of the partnership "flows through" to the partners under the domestic law of that State, the partners are the persons who are liable to tax on that income and are thus the appropriate persons to claim the benefits of the conventions concluded by the States of which they are residents. This latter result will be achieved even if, under the domestic law of the State of source, the income is attributed to a partnership which is treated as a separate taxable entity […]"

[317] See Joanna Wheeler, *The Missing Keystone of Income Tax Treaties*, IBFD Doctoral Series no. 23, (2012), pp. 23-24. According to Wheeler, the reason derives from the fact that the solutions under the Partnership Report always involves giving preference to the treatment given in one State while problems related with attribution of income cannot be determined by just one State. Wheeler states that attribution of income under tax treaties is the element that determines how a connection is made between two treaty partner States in order to determine which treaty applies. A taxable person entitled to treaty benefits is also required as it is necessary to follow the flow income until it reaches such taxable person. However to determine the income flow is a process that cannot be left to one single State.

In any case - and possibly because in conflicts of classification the attribution of income appears as an effect of the definition of the taxable unit - the existing systems of group taxation try fundamentally to solve the issues related to tax treaty residence of its group members[319] by not removing the treatment of group members as taxable subjects but rather maintaining their tax status at the same time that the consolidation goals are achieved by aggregating the results of the different group members with those of the parent company. The consequence is that the subsidiary is considered entitled to treaty benefits irrespective of the fact that, from a domestic perspective, the income may be attributed to the parent company. This is also a consequence of the facts that typically, States will maintain their own rules on attribution of income.[320] Therefore, if a State of source applies its own rules on attribution of income and considers that the income is being paid to a subsidiary, and this subsidiary is considered as resident in its respective State, it will probably claim the treaty benefits. This, independent of what happens domestically pursuant to the application of the group taxation regime.

Even the States that have tax groups which provide for a high degree of integration of the subsidiaries in the parent company (e.g. Australia and the Netherlands) appear to consider that the attribution of income is not a treaty issue and prefer to rely on preserving the tax liability status of the subsidiaries which are group members as a guarantee for the tax treaty entitlement.[321]

7.4.5.2 Cross-border Group taxation and tax treaties

Given that tax treaties allocate taxing rights[322] between the residence State and the source State considering the type of income at stake, it is relevant to determine which distributive rule is applicable to that imputed income under the group taxation regimes. Although it is true that the existence of tax groups is mostly limited to domestic situations, the assessment made reveals that cross-border group taxation regimes exist and it becomes relevant whether tax treaties limitation of taxing rights may affect cross-border consolidation.

A preliminary question regarding the tax treaty analysis of the aggregation of income within a tax group is whether this constitutes income for treaty purposes. As said, tax

---

[318] See Simon Patrick Link, "Application of tax treaties to companies subject to national group taxation regimes", in G. Maisto (ed.) *International and EC Tax Aspects of Groups of Companies, EC and International Tax Law Series*, Vol. 4, IBFD (2008), pp. 145.

[319] See the case of the Netherlands with the amendments to the fiscal unity regime.

[320] See J. Wheeler, IFA General Report "Conflicts in the Attribution of Income to a Person" , *Cahiers de Droit Fiscal International*, Vol. 92b (2007), p. 50.

[321] Similarly and as regards the Netherlands, see Joanna Wheeler, *The Missing Keystone of Income Tax Treaties*, IBFD Doctoral Series no. 23, (2012), p. 28 and regarding Australia, the interpretation of the Australian Tax Office contained in Taxation Ruling 2004/11.

[322] See Michael Lang, *Introduction to the Law of Double Tax Conventions*, Linde Verlag/IBFD (2010), p. 30.

group's premise is based on the notion that its members should be treated for tax purposes as a single economic unit. In that regard, it could be argued that the offsetting of profits and losses, which characterises income aggregation within a group, would not constitute income from a treaty perspective as it does not represent an effective flow of income but rather a mere accountancy movement of profits and losses between the group members. Ultimately, that would mean that tax treaties would not be applicable as regards the offsetting of profits and losses as that would not constitute income from a treaty perspective. There are, however, compelling arguments to follow a different reasoning. Tax Treaties do not have a definition of income and accordingly, its meaning should be determined based on domestic law pursuant to Article 3 (2). In fact, income exists where the tax system describes an actual circumstance and links it to a legal consequence in connection with a tax on such income.[323] Thus, domestic law is free to determine its own concept of income which, naturally, can include deeming rules of income attribution which, whilst being notional, fall within the meaning of income, also for the purposes of treaty application.

Having determined that the group's tax base constitutes income for tax treaty purposes, the next question is to determine which distributive rules are applicable to the attributed income. A first possibility is to apply Article 10 on the taxation of dividends. Fundamentally it could be argued that the income arising for a group member (typically the parent company) under the tax group is income which has its legal basis on the existing shareholding held by the parent in the subsidiaries. As a rule indeed the formation of tax groups is dependent on a considerable level of participation of a parent company in the subsidiaries.

An additional argument is that the reference in Article 10 to dividends "paid" should be interpreted broadly in order to cover any event which triggers a tax liability deriving from shares even if there is no actual link to a payment.[324]

A further argument could, of course, rely on the resemblance of this issue with the one regarding CFC legislation and the possible classification of such income as dividends.[325]
The application of Article 10 in the case of tax groups is doubtful. First of all and while it is true that the formation of a group involves a majority shareholding the possibility also occurs that intra-group transfers are made between sister companies. In that event, naturally, the income received has no direct relation with a shareholding or income derived from shares. In addition, the fact is that the attributed income is a merely notional and it is

---

[323] See Michael Lang, "CFC Regulations and Double Taxation Treaties, *"Bulletin – Tax Treaty Monitor,* 2 IBFD (2003)", p. 53.
[324] Michael Lang, "CFC Regulations and Double Taxation Treaties, *"Bulletin – Tax Treaty Monitor,* 2 IBFD (2003), p. 56 or Klaus Vogel, *On Double Taxation Conventions: a Commentary to the OECD, UN and US Model Conventions for the Avoidance of Double Taxation of Income and Capital with particular reference to German Treaty Practice* (Kluwer 3rd edition 1997), p. 890.
[325] See on this OECD, *International Tax Avoidance and Evasion, Double Taxation Conventions and the Use of Base Companies*, Issues in International Taxation no. 1, Paris (1987), paras. 45-50.

not followed by an actual payment.[326] While it is correct that the term paid should have a broad interpretation, nothing in the Commentary suggests that this term also includes notional earnings.[327] In fact, it appears always to be associated with real economic earnings. Furthermore, the intra-group transfers are not limited only to positive income. In the case of a transfer of a loss, naturally, this classification of income as dividend could not prevail.

An alternative provision is to apply Article 7 as a distributive rule. This provision is applicable only if Article 10 does not apply, given that the latter has priority pursuant to the rules of subsidiarity of tax treaty law. The possibility to apply this provision is fundamentally dependent on the appropriate interpretation of the expression "*profits of an enterprise*". Clearly the reference to profits refers to business profits as set out in the heading of Article 7. From the outset and in comparison with Article 10, there is no limitation to positive income as in case of dividends because profits arguably also include negative income.

Tax treaties do not contain an exhaustive definition of the meaning of business profits. Article 3 (1) (h) defines business as including "*the performance of professional services and of other activities of an independent character*." As regards the meaning of profits the Commentary[328] sets out that:

> Although it has not been found necessary in the Convention to define the term "profits", it should nevertheless be understood that the term when used in this Article and elsewhere in the Convention has a broad meaning including all income derived in carrying on an enterprise. Such a broad meaning corresponds to the use of the term made in the tax laws of most OECD Member countries.

Both the reference included in Article 3 (1) (h) on the definition of business and the Commentary to the OECD MTC hold that, in principle, these terms should be interpreted in accordance with domestic law. Practice, however, has revealed that there are differences among States as regards the categorization as business profits and, therefore, elements which can be derived from the context should be relevant for the interpretation of these expressions.[329] In that sense, the reference in the Commentary of the meaning of profits to income *derived* suggests – as developed below - that it corresponds to an actual earning and not the income notion as in the case of consolidation. In addition and as to the definition of business, the context of the Convention through the interaction of the different rules of the

[326] Differently, see Michael Lang, "CFC Regulations and Double Taxation Treaties", *Bulletin – Tax Treaty Monitor,* 2 IBFD (2003), p. 56 who within the context of CFC discussion supports the application of Art. 10 even when no actual payment exists.
[327] See Luc de Broe, *International Tax Planning and Prevention of Abuse: A Study under Domestic Tax Law, Tax Treaties, and EC Law in Relation to Conduit and Base Companies*, IBFD Doctoral Series Vol. 14 (2008), p. 624.
[328] See para. 71 of the Commentary to Art. 7 of the OECD MTC.
[329] See Alexander Rust, "Business" and "Business Profits", in G. Maisto (ed.) *The Meaning of "Enterprise", "Business" and "Business Profits" under Tax Treaties and EU Tax Law*, EC and International Tax law Series, Vol. 7 IBFD (2011), p. 91.

Convention appears to support the application of Article 7 only to independent activities[330] excluding its application to mere holding of participations in subsidiary companies[331] which frequently might be the case of a parent company of a group. In that sense, the income arising from tax group consolidation possibility does not derive from a business and arguably does not constitute a profit under Article 7.[332]

Another alternative is the application of Article 21, which deals with other income. This provision is a blanket clause[333] which applies to all the income not previously dealt with by the other distributive rules. This is due to either because a certain type of income is not covered by one of the other distributive rules or because some distributive rules only consider income in the other Contracting State but they do not take into account income arising in third countries or in the residence State of the recipient.[334] This article also covers notional income that is attributed for tax purposes to a taxpayer even though the income was not actually paid or distributed to such taxpayer. Typically, tax groups work based on a fiction in which the income is attributed to one of the group members.

As stated by Wattel and Marres,[335] the distributive rules on tax treaties in general do not take into account income notions. They make reference to income being *paid to* or *derived by*, thus something which has been actually placed at the disposal of the taxpayer. An ordinary interpretation of these terms does not appear to support the possibility to include notional income. While arguably the specific distributive rules from Articles 6 to 20 do not take into account income notions, this does not mean that such income falls outside the scope of tax treaties. As referred to, tax treaties do not limit the definition of income. That

---

[330] Art. 15 applies to dependent services limiting the application of Art. 7 to independent services. See Alexander Rust, "Business and Business Profits", in G. Maisto (ed.) *The Meaning of "Enterprise", "Business" and "Business Profits" under Tax Treaties and EU Tax Law*, EC and International Tax law Series, Vol. 7 IBFD (2011), p. 95.

[331] See Jacques Sasseville, "Enterprise", "Business" and "Business Profits": From the League of Nations to the Current OECD Model Tax Convention, in G. Maisto (ed.) *The Meaning of "Enterprise", "Business" and "Business Profits" under Tax Treaties and EU Tax Law*, IBFD EC and International Tax law Series, Vol. 7 (2011), p. 55.

[332] Claus Staringer considers that Art. 7 is the distributive rule indeed applicable to income consolidation within a tax group. His assumption, based on analogy with partnerships is that the parent company derives income from carrying on an enterprise. For that purpose, it considers that the subsidiary constitutes a PE of the parent company under Art. 5 (7). As explained below, I disagree with this reasoning and also with the the application of Art. 7 as the appropriate distributive rule.

[333] See Michael Lang, *Introduction to the Law of Double Tax Conventions*, Linde Verlag/IBFD (2010), p. 68.

[334] This is due to the different geographical scope of the distributive rules of the OECD MTC. In fact some of the articles (Articles 6, 10, 11, 12, 16, 17) have a *bilateral reach* while others have a *global reach* (Articles 7, 8, 13, 15, 18) and therefore, income derived from a source in a third state or in the State of residence falls outside of the scope of such article. In such cases, the taxing right of the income is taken over by another provision of the treaty, ultimately Article 7 for business income or Article 21 for non-business income). See on this, Kees van Raad, "Five Fundamental Rules in Applying Tax Treaties", in *Planeamento e Concorrência Fiscal Internacional*, Fisco/Associação Portuguesa de Consultores Fiscais, (2003), pp. 343-345.

[335] See Peter J. Wattel and Otto Marres, "Characterization of Fictitious Income under OECD-Patterned Tax Treaties, *European Taxation* 3 IBFD (2003), pp. 67-69.

definition relies exclusively on domestic law and, in that sense, there is no prohibition of States using domestic law notions in order to determine their tax base.[336] As a catch-all clause, the purpose of Article 21 is to cover any other income which is not covered by the specific income provisions.
The income under a tax group is not an actual advantage derived by a group member but rather an attribution or imputation of income which does not fit into the ordinary meaning of paid to or derived by. In that sense, it constitutes notional income with the consequence that Article 21 is the applicable distributive rule.

After determining the appropriate distributive rule, the final step is to analyse whether there is any limitation that prevents – within the context of a cross-border group[337] – the parent company from including the income (positive or negative) in the parent's company taxable base. The starting point of this analysis reveals the possible issue: as referred tax treaties clearly sustain from the recognition of separate taxpayers. In the context of a tax group this means that the income obtained from two companies located in two different jurisdictions should, in principle, be subject to the (exclusive) taxation of the respective State of residence unless they have a PE in another State.

Although I have excluded the application of Article 7 as the relevant distributive rule, it is still interesting to analyse the solution that has been proposed by the Austrian scholarship[338] in order to sustain that cross-border group taxation is compliant with the distributive rules of tax treaties.[339] The reasoning is based on the fact that the attribution of the group member's income to the group parent company would entail that such member would be treated as a PE of the group parent. This treatment would not be contradicted by Article 5 (7) as the exercise of control is not the relevant feature for the deemed PE but rather meeting the requirements of consolidation which would lead to a different attribution of income. The existence of a PE under the State of the subsidiary would then allow allocating profits and losses under Article 7 (2). The State of residence of the parent company would likely reach a different result seeing the parent and subsidiary as two independent entities. This diverging recognition of a PE would be a result of differences in the attribution of income under the respective domestic laws.

---

[336] See Peter J. Wattel and Otto Marres, "Characterization of Fictitious Income under OECD-Patterned Tax Treaties, *European Taxation* 3 IBFD (2003), p. 69.
[337] Naturally, within the scope of a domestic tax group the classification of the income under the relevant distributive rule and the consolidation of the taxable base does not raise issues as regards possible limitations from a treaty perspective as all the entities are located in the same State.
[338] See on this, Claus Staringer, "Business income of tax groups in tax treaty law" or Florian Brugger, "Country Reports: Austria" both in, G. Maisto (ed.) *International and EC Tax Aspects of Groups of Companies* - EC and International Tax Law Series, Vol. 4, IBFD (2008), pp. 154-155.
[339] Arguing - without providing the relevant reasoning – about the possible breach of Art. 7 in regard to the taxation by the State of the parent company of the income of the subsidiary located in another State, see Raul-Angelo Papotti, "Treaty Non-Discrimination Clause in Group Consolidation Situations", 31 Intertax 10 Kluwer Law International (2003), p. 320, note 1.

I disagree with the interpretation proposed as regards Article 5 (7). This provision states that a subsidiary may not be considered a PE of its non-resident parent company as a result of the control of the subsidiary exercised by the parent company. The underlying principle is the recognition of separate legal personality between parent and subsidiary. Therefore, the circumstances under which the subsidiary may constitute a permanent establishment should necessarily be an exception and subject to strict interpretation. Lack of independence may not be presumed and, in particular, a subsidiary may not be dependent just because the parent company owns almost all of its capital.[340] Therefore, it is necessary to demonstrate that strong functional dependence exists far beyond mere control.[341] Moreover, the functional dependence occurs because the activities of the subsidiary fall within the scope of the other provisions of Article 5:[342] where the subsidiary acts as an agent of its parent company – pursuant to Article 5 (5) and (6) – and when the subsidiary places its premises at the disposal of its foreign parent company under which this last company carries on a business – Article 5 (1). The existence of a group link does not fall under those two possibilities. It is indeed based on the existence of control (legal and/or economic) but does not lead by itself to *de facto* dependence. Therefore, the fundamental difference[343] relies on the fact that while paragraph 7 of Article 5 requires the re-characterization of the subsidiary as a branch from a functional point of view – the existence of dependence – tax consolidation rules apply *ipso jure*, with no relevance being given to factual dependence. That by itself demonstrates the incorrect application of paragraph 7 of Article 5 for group taxation regimes in general.[344]

Therefore, and excluding the possibility to apply Article 5 (7), the question remains whether the cross-border income[345] consolidation is prevented by tax treaties. Article 21

---

[340] See Jean Pierre Le Gall, "The David R. Tillinghast Lecture: Can a subsidiary be a Permanent Establishment of its Foreign Parent? Commentary on Article 5, Par. 7 of the OECD Model Tax Convention", 60 *Tax Law Review* 4, New York (2007) pp. 184-185.

[341] See Aarvid Skaar, *Permanent Establishment – The Erosion of a Tax Treaty Principle*, Series on International Taxation 13, Kluwer Law Deventer (1991), pp. 550 and Jean Pierre Le Gall, The David R. Tillinghast Lecture: "Can a subsidiary be a Permanent Establishment of its Foreign Parent? Commentary on Article 5, Par. 7 of the OECD Model Tax Convention", 60 *Tax Law Review* 4, New York (2007) p. 205.

[342] See Aarvid Skaar, *Permanent Establishment – The Erosion of a Tax Treaty Principle*, Series on International Taxation 13, Kluwer Law Deventer (1991), pp. 543-548 and Philip Baker, *Double Taxation Conventions*, Sweet & Maxwell (loose leaf edition), pp. 5-2/16 – 5-2/17.

[343] See Jean Pierre Le Gall, The David R. Tillinghast Lecture: Can a subsidiary be a Permanent Establishment of its Foreign Parent? Commentary on Article 5, Par. 7 of the OECD Model Tax Convention", 60 *Tax Law Review* 4, New York (2007) pp. 190-191.

[344] See in this regard, Wolfgan Mitschke, "Keine Disrkiminierung nach Art. XX Abs. 4 DBA-Grossbritannien in Fallen auslanderbeherrschter Inlandskapitalgesellschaften, *IStR* 2011, pp. 537-542, and also A. Rust in "Ermöglichen Diskriminierungsverbote eine Organschaft über die Grenze? - Anmerkung zum Urteil des BFH vom 29. 1. 2003", *IStR* 2003, 422, pp. 660-661. Para. 41.1 of the Commentary to Art. 5 appears to confirm this reasoning when determining that the principles of interpretation of paragraph 7 apply to any company forming part of a multinational Group and thus to companies belonging to a tax group.

[345] There could be arguments to sustain that the reference to income is merely positive income. In the case of States (e.g. the case of Austria which allows the possibility to set off losses incurred by foreign subsidiaries)

(similarly to Article 7) attributes exclusive taxing rights to the State of residence of the company. In other words this means that in a situation of cross-border group consolidation, in principle the State of the subsidiary has the exclusive right to tax the income as the State of residence of that entity whereas the State of the parent company has the exclusive right to tax the income of that company. Article 21 (2) provides an exception to this principle (as does the second part of Article 7 (1)) in the case the company resident in one State has a PE in the other State, the case in which the rules of Article 7 apply. Probably the main argument to support that there is no tax treaty conflict with the attribution of income as regards cross-border tax groups is that the notional income taxed at the level of the parent company is arguably income which has no source in the State of residence of the subsidiary. The decisions on attribution of income are based on the decision of each State. Tax treaties do not contain rules on attribution of income. The object and purpose of tax treaties is, typically, to limit existing tax obligations. Therefore, they should apply to the entities which have become the subject of attribution of income in accordance with the decisions made by the relevant State. As argued by Lang,[346] if in accordance with the domestic laws of States income is attributed to different entities, tax treaties will usually accept those attribution decisions in the States involved. Overall this would mean that a literal interpretation of Article 21 (or Article 7) would lead to the income of the foreign subsidiary not being taxed in the State of the parent company. The taxation in the State of the parent company is only on this company and on the amount of profits which are taxed in this company even if they would happen to include the same as those taxed within the scope of the subsidiary.

---

that would provide only for cross-border loss relief, such would not constitute a possible issue under the distributive rules of tax treaties. In fact, some references in the Commentary appear that losses are outside tax treaty scope and are to be dealt with exclusively under domestic law. In particular. para. 44 of the Commentary to Art. 23 lays down:

> "44. Several States in applying Article 23 A treat losses incurred in the other State in the same manner as they treat income arising in that State: as State of residence (State R), they do not allow deduction of a loss incurred from immovable property or a permanent establishment situated in the other State (E or S). Provided that this other State allows carry-over of such loss, the taxpayer will not be at any disadvantage as he is merely prevented from claiming a double deduction of the same loss namely in State E (or S) and in State R. Other States may, as State of residence R, allow a loss incurred in State E (or S) as a deduction from the income they assess. In such a case State R should be free to restrict the exemption under paragraph 1 of Article 23 A for profits or income which are made subsequently in the other State E (or S) by deducting from such subsequent profits or income the amount of earlier losses which the taxpayer can carry over in State E (or S). As the solution depends primarily on the domestic laws of the Contracting States and as the laws of the OECD member countries differ from each other substantially, no solution can be proposed in the Article itself, it being left to the Contracting States, if they find it necessary, to clarify the above- mentioned question and other problems connected with losses (see paragraph 62 below for the credit method) bilaterally, either in the Article itself or by way of a mutual agreement procedure (paragraph 3 of Article 25)."

[346] See Michael Lang, "CFC Regulations and Double Taxation Treaties", *Bulletin – Tax Treaty Monitor,* 2 IBFD (2003), p. 53-54.

There are, in my view, some arguments to criticize this reasoning. Indeed, it is up to each State to determine its rule on attribution of income. Nevertheless, the compatibility of domestic provisions, in the case if cross-border tax group regulations, should be supported by the wording of the tax treaty, viewed in light of its object and purpose. Therefore, although States have considerable leeway in defining their rules on attribution of income, they can simply not be left unaffected by tax treaties.[347] Looking at the context of a tax treaty in order to seek its interpretation, it has already been demonstrated that tax treaties favour a separate entity approach and do not recognize groups for tax purposes. In other words, treaties recognize the separate existence of a parent and a subsidiary, their separate tax residence and consequently, the consolidation of income and the level of the parent company is a major contradiction of this relevant principle. In addition, a possible argument that the income consolidated at the level of the parent company is in fact income of the parent company in accordance with the rules of attribution of income of the respective State is a contradiction of a tax group itself. The purpose of tax groups and its goal is precisely to treat a group of companies as a single entity for tax purposes. In that regard it assumes, *inter alia*, the set off of profits and losses of the different group members. Thus, the income consolidated at the level of the parent company is not (only) profit of this company but does indeed assume income of all the other members of the group. More clearly, although one is dealing with notional income, the fact is that there is a clear (I would add: intrinsic) link between the income attributed to the parent company under its State rules on tax groups and the foreign subsidiaries' profits.[348]

This being the case, that means that the State of the parent company has no taxing rights over the subsidiaries which are members of the group unless they have PEs located in that State based on Article 21 (or Article 7) of the relevant tax treaty.

In that sense, arguably, cross-border tax groups do contravene tax treaties[349] and a specific provision should be included in the relevant agreement in order to safeguard their application.

---

[347] See Luc de Broe, *International Tax Planning and Prevention of Abuse: A Study under Domestic Tax Law, Tax Treaties, and EC Law in Relation to Conduit and Base Companies*, IBFD Doctoral Series Vol. 14 (2008), p. 605.

[348] This link appears to be relevant for Wattel and Marres in order to determine whether the Netherlands rules on deemed dividends of Art. 4.14 of the 2001 ITA contravene tax treaties. This provision taxes the notional return on the shares in the foreign subsidiary calculated as a percentage of the value of the shares. These authors conclude that the connection between the taxation of notional dividends in the hands of the individual shareholder and the foreign entity's profits appear to be insufficient to be considered in conflict with Art. 7. See Peter J. Wattel and Otto Marres, "Characterization of Fictitious Income under OECD-Patterned Tax Treaties", *European Taxation* 3 IBFD (2003), p. 75.

A *contrario* I believe that in the case of tax groups the link with the consolidated income is quite apparent.

[349] Although irrelevant from a legal analysis perspective, probably the reason for the absence of litigation regarding cross-border tax groups and possible breach of the distributive rules of tax treaties is due to the elective nature of the few existing cross-border tax group regimes. If taxpayers opt for their application, chances are scarce that they would bring their application before the Courts.

7.5 Interim conclusions

The OECD MTC does not contain provisions dealing specifically with tax groups, and most bilateral tax treaties also do not include such provisions. In the absence of such provisions the application of tax treaties to tax groups should follow the interpretation of the general rules provided in the OECD MTC.

Primarily, this requires determining the treaty entitlement of groups, notably if they constitute a person and if they can be considered as residents of a Contracting State. In this regard it was concluded that from a tax perspective, groups do not give rise to separate legal entities nor do they constitute different taxable units treated as a body corporate according to the tax laws of the Contracting State in which they are organized. Therefore, the tax group should not constitute a person for treaty purposes but rather its group members.

The following issue is to determine tax residence and whether the inclusion in a tax group can affect the status as a resident for treaty purposes. In the past, it was disputable whether subsidiaries would maintain their status as liable to tax and therefore residents for treaty purposes as regards some group taxation regimes. Currently, the approach is to consider that group members of a tax group maintain their tax resident status and are considered as residents for the purposes of claiming treaty entitlement.

The alignment between domestic and treaty residence may be challenged in the case of dual resident companies. In the case a company is resident in two States, tax treaty provisions allow determining the relevance residence for treaty purposes. This may impact both the allocation of taxing rights as regards the income taxation of the different group members, the application of the relevant distributive rules as well the possible claims under the non-discrimination article in tax treaties.

Another aspect is to consider the relation between tax treaties and cross-border group taxation. There are some cross-border group taxation regimes in force and it is relevant to determine whether the limitation and allocation of taxing rights in tax treaties may affect cross-border income consolidation in situations where the application of those cross-border tax groups is not specifically provided in the tax treaty itself (and its Protocol). In this context it was argued that cross-border tax groups do contravene tax treaties and the respective distributive provisions. The purpose of tax groups is to treat a group of companies as a single entity. In this regard it assumes, *inter alia*, the set off of profits and losses of different group members. Therefore, the income consolidated at the level of the parent company includes income of other members of the group and their cross-border taxation may collide with the allocation of taxing rights provided in tax treaties. The best solution is then to include a specific provision in the treaties to safeguard the application of cross-border group taxation.

Chapter 8

The Non-discrimination Provision: Analysis of Article 24 of the OECD MTC

8.1. Introduction

Nowadays, tax discrimination is a widely used concept although a clear definition of its meaning has failed to emerge.[350] The concept of discrimination is commonly defined based on the general meaning of the term as providing different treatment to similar situations or a similar treatment for different situations.[351] It is a relative concept[352] as it involves the comparison of the treatment provided to a person with that provided to other person.
The lack of such clear definition has not prevented references to non-discrimination to be included in different international agreements, notably in bilateral tax treaties.
The challenge of domestic tax law provisions based on discriminatory treatment of cross-border situations has accelerated rapidly in the last two decades with the large number of judgments delivered by the Court of Justice of the European Union (the "CJ") regarding direct taxation. Several of those cases tested the consistency of domestic law provisions with the fundamental freedoms and in a large number of cases they were favourable to the taxpayers' claims. The non-discrimination provisions in tax treaties are now more often being used as grounds to challenge unfavourable tax treatment provided by domestic laws. Reality reveals, in fact, that considerable attention has recently been given to tax treaty non-discrimination[353] as this demonstrates to be relevant for cross-border activities and thus to international business and trade.

Article 24 of the OECD MTC which provides for the non-discrimination principle in tax treaties may also be of particular relevance when dealing with the effect of tax treaties on group taxation regimes. The question is whether it may be possible to rely on this provision to effectively extend tax group regimes which are applicable only in a purely domestic scenario to (some) cross-border situations. Article 24 of the OECD MTC has a different nature from the articles previously referred to. While those have a positive content – in the sense that they regulate particular issues which directly or indirectly relate to groups of

[350] See Ruth Mason and Michael S. Knoll, "What is Tax Discrimination?" 121 *Yale Law Journal* (2012), p. 1019.
[351] See, *inter alia*, Pietro Adoninno, IFA General Report "Non-discrimination rules in international taxation", *Cahiers de droit fiscal international Volume LXXVIIIb*, Deventer Kluwer (1993) p. 22 and Bruno Santiago "Non-Discrimination Provisions at the Intersection of EC and International Tax Law", *European Taxation* 5 IBFD (2009), p. 249.
[352] See Kees Van Raad, "Issues in the Application of Tax Treaty Non-Discrimination Clauses", *Bulletin* 8/9 IBFD (1988), p. 347.
[353] See Craig Ecliffe, "Unfinished Business: Domestic Thin Capitalization Rules and the Non-Discrimination Article in the OECD Model", 67 *Bulletin for International Taxation* 1 IBFD (2013), p. 27.

companies – the non-discrimination has a negative content as, by itself, it does not address any particular issue. It rather addresses domestic regulations which provide for a different tax treatment granted, under certain situations, to foreign nationals or residents. As will be better demonstrated below, Article 24 may be of relevance within the scope of tax group regimes.

The principle of non-discrimination is stated in most tax treaties concluded between States. As this thesis analyses both EU and International Tax Law considering group taxation regimes in EU Member States, an assessment will be made based on the corresponding provision provided in the OECD Model Tax Convention[354] that is followed by the majority of the EU Member States, which states as follows:

"Article 24
NON-DISCRIMINATION

1. Nationals of a Contracting State shall not be subjected in the other Contracting State to any taxation or any requirement connected therewith, which is other or more burdensome than the taxation and connected requirements to which nationals of that other State in the same circumstances, in particular with respect to residence, are or may be subjected. This provision shall, notwithstanding the provisions of Article 1, also apply to persons who are not residents of one or both of the Contracting States.
2. Stateless persons who are residents of a Contracting State shall not be subjected in either Contracting State to any taxation or any requirement connected therewith, which is other or more burdensome than the taxation and connected requirements to which nationals of the State concerned in the same circumstances, in particular with respect to residence, are or may be subjected.
3. The taxation on a permanent establishment which an enterprise of a Contracting State has in the other Contracting State shall not be less favourably levied in that other State than the taxation levied on enterprises of that other State carrying on the same activities. This provision shall not be construed as obliging a Contracting State to grant to residents of the other Contracting State any personal allowances, reliefs and reductions for taxation purposes on account of civil status or family responsibilities which it grants to its own nationals.
4. Except where the provisions of paragraph 1 of Article 9, paragraph 6 of Article 11, of paragraph 4 of Article 12, apply, interest, royalties and other disbursements paid by an enterprise of a Contracting State to a resident of the other Contracting State shall, for the purpose of determining the taxable profits of such enterprise, be deductible under the same conditions as if they had paid to a resident of the first-mentioned State. Similarly, any debts of an enterprise of a Contracting State to a resident of the other Contracting State shall, for the purpose of determining the taxable capital of such enterprise, be deductible under the same conditions as if they had been contracted to a resident of the first-mentioned State.
5. Enterprises of a Contracting State, the capital of which is wholly or partly owned or controlled, directly or indirectly, by one or more residents of the other Contracting State, shall not be subjected in the first-mentioned State to any taxation or any requirement

[354] OECD *Model Convention with Respect to Taxes on Income and Capital* (Paris, 2014).

connected therewith which is other or more burdensome than the taxation and connected requirements to which other similar enterprises of the first-mentioned State are or may be subjected.

6. The provisions of this Article shall, notwithstanding the provisions of Article 2, apply to taxes of every kind and description."

Non-discrimination constitutes a fundamental and quite attractive principle. However, a mere plain reading of Article 24 immediately allows to conclude that its scope is not entirely clear, probably due to the absence of any apparent structure and philosophy underlying this provision.

The interpretation of this provision should be made considering the other relevant provisions of a tax treaty. This means that the interpretation to be performed may not lead to a situation which affects the existing treaty rules regarding the allocation of taxing rights provided in Articles 6 through 22 of the OECD MTC. Probably all those circumstances taken together are the reason for which the application of Article 24 in favour of taxpayers has – at least in a first stage - been quite limited based on the narrow interpretations being followed by both tax authorities and courts.[355]

8.2. The scope of Article 24: general remarks

The application of the principle of non-discrimination in international tax relations dates well before its appearance in the classical type of double tax conventions.[356] Non-discrimination articles first started to appear in the trade treaties negotiated in the nineteenth century. Later, the League of the Nations drafted two model tax treaties which included non-discrimination provisions.[357] Such provision – although with a much more limited scope than the one drafted by the League of the Nations – was included in the OECD Model.

The concerns about discriminatory treatment are not exclusive of international trade relations. Also at domestic level, protection against discriminatory treatment is very common as many States have, either in their constitutions or in their basic laws, a general principle of equality which affords a general protection against discrimination. As per comparison, it should be stressed, however, that Article 24 does not constitute a true equal treatment provision in the sense that it does not confer/impose on foreign persons the same rights/obligations as domestic persons.[358] In fact, Article 24 deals with the elimination of tax discrimination in certain precise circumstances[359] by preventing differences in tax

[355] See Mary C. Bennett, "The David Tillinghast Lecture: Nondiscrimination in International Tax Law: a concept in search of a principle", 59 *Tax Law Review* 4, New York (2006) p. 439.
[356] See para. 6 of the Commentary to Article 24 of the OECD Model Convention.
[357] See Lara Friedlander, "The Role of Non-Discrimination in Bilateral Income Tax Treaties after G.A.T.T. 1994", *British Tax Review* 2, 2002, p. 74.
[358] See Kees Van Raad, *Non-Discrimination in International Tax Law*, Kluwer Law International, The Hague (1986), p. 73.
[359] See para. 1 of the Commentary to Article 24 of the OECD Model Convention.

treatment that are solely based on certain specific grounds[360] which are provided in the several clauses of Article 24[361]. In addition and contrary to an equality principle, the non-discrimination is formulated in negative terms, meaning that it forbids worse treatment than that granted to nationals or residents but it does not tackle situations of better treatment granted to foreigners.[362]

The non-discrimination article in tax treaties specifies several criteria which contracting States may not use as a basis for tax discrimination. Article 24 of the OECD MTC contains five different provisions which are aimed at prohibiting a discriminatory treatment of a taxpayer in particular circumstances. Such non-discrimination clauses are part of one of the most interesting, but at the same time intriguing, articles of tax treaties. They constitute what has been said[363] to be an "incoherent collection of fairly narrow clauses" having no obvious relation with the other articles of the treaty.[364] This lack of relation with the remaining treaty articles is due to the fact that while most tax treaty provisions – the rules from Article 6 to Article 23 - are addressed to the avoidance of double taxation, the non-discrimination provision fits in with the general aim to promote the free movement of persons, business and capital.

---

[360] See para. 3 of the Commentary to Article 24 of the OECD Model Convention.

[361] See, Pietro Adoninno, IFA General Report "Non-discrimination in International Tax Law", *Cahiers du Droit Fiscal International*, Vol. 78b, Amersfoort Sdu fiscal en financiele uitvegers (1993), p. 34.

[362] See Klaus Vogel, *On Double Taxation Conventions: a Commentary to the OECD-, UN- and US Model Conventions for the Avoidance of Double Taxation of Income and Capital with particular reference to German Treaty Practice* (Kluwer 3rd edition 1997), p. 1282; Alberto Xavier, *Direito Tributário Internacional*, 2ª Edição, Almedina 2007, p. 271 and Niels Bammens *The Principle of Non-Discrimination in International and European Tax Law*, IBFD Doctoral Series no. 24 (2012) p. 129. Actually para. 14 of the Commentary to Art. 24 (1) follows this precise reasoning when stating that:

> "Furthermore, paragraph 1 has been deliberately framed in a negative form. By providing that the nationals of a Contracting State may not be subjected in the other Contracting State to any taxation or any requirement connected therewith which is other or more burdensome than the taxation and connected requirements to which nationals of the other Contracting State in the same circumstances are or may be subjected, this paragraph has the same mandatory force as if it enjoined the Contracting States to accord the same treatment to their respective nationals. But since the principal object of this clause is to forbid discrimination in one State against the nationals of the other, there is nothing to prevent the first State from granting to persons of foreign nationality, for special reasons of its own, or in order to comply with a special stipulation in a double taxation convention, such as, notably, the requirement that profits of permanent establishments are to be taxed in accordance with Article 7, certain concessions or facilities which are not available to its own nationals. As it is worded, paragraph 1 would not prohibit this."

[363] See Kees Van Raad "Issues in the Application of Tax Treaty non-discrimination clauses", *Bulletin of International Fiscal Documentation* 8/9 (1988), p. 347.

[364] Somewhat diverging, see Werner Haslehner, "Nationality Non-discrimination and Article 24 OECD – Perennial Issues, Recent Trends and New Approaches", in D. Weber (ed.) *Non-discrimination in tax treaties: selected issues from a global perspective* IBFD, Amsterdam (forthcoming). who considers that although some shortcomings exist as to a more elaborated non-discrimination rule, the provisions of Article 24 constitute a key element of double tax treaties that complement the core provisions regarding the allocation of taxing rights.

Given that it does not impose a general non-discrimination treatment, the scope of Article 24 covers situations where a distinction is made on the basis of the prohibited criteria if the taxpayer is subject to a worse treatment although in similar circumstances except with regard to the prohibited criteria.[365] To determine the existence of a discriminatory treatment one is required to perform a comparison test between the real situation at stake and the hypothetical situation regarding what the taxpayer considers to be discriminating. Therefore, in order to verify whether the specific non-discrimination provision is applicable, the following procedure should be followed: (hypothetical situation) deem the taxpayer to be (i) a national of the other contracting State (paragraphs 1 and 2) or (ii) a resident of the other contracting State (paragraphs 3 to 5) and leave all the other factors unchanged. If the taxpayer is placed in a better position after this assumption has been made – that is, if in that hypothetical situation the taxpayer would benefit from the application of the relevant legislation - then the non-discrimination provision is in breach. It is not required[366] that all circumstances are entirely identical except in with regard to the specific factor protected under one of the non-discrimination provisions. The requirement is that "the relevant factor" for the adverse treatment is within one of the paragraphs of Article 24 even if other conditions which are merely incidental are not exactly the same. In other words, identity should be in all *"relevant aspects"*, which means that the taxpayer does not have to be completely identical in all circumstances except nationality or residence.[367] Ultimately, it can be affirmed that comparability involves the "test of relevance"[368], that is, identifying also the relevant characteristics that should be identical (except the discriminatory factor being claimed) for performing the comparison. This is actually supported by the 2008 amendments to Article 24 of the OECD MTC which have included the following wording in paragraph 3 of the Commentary:

> "The various provisions of Article 24 prevent differences in tax treatment that are solely based on certain specific grounds (e.g. nationality, in the case of paragraph 1). Thus for these paragraphs to apply, <u>other relevant aspects must be the same</u>. The various provisions of Article 24 use different wording to achieve that result (e.g. "in the same circumstances" in paragraphs 1 and 2; carrying on the same activities" in paragraph 3; "similar enterprises" in paragraph 5). […] [underscore BdS]"

---

[365] See Alexander Rust, "International Tax Neutrality and Non-Discrimination: A Legal Perspective", in M. Lang (ed.), *Tax Treaties: Building Bridges Between Law and Economics*, IBFD (2010), pp. 631.

[366] See Niels Bammens *The Principle of Non-Discrimination in International and European Tax Law*, IBFD Doctoral Series no. 24 (2012) pp. 172-173 or Alexander Rust, "International Tax Neutrality and Non-Discrimination – A Legal Perspective", in M. Lang et al (eds.) *Tax Treaties: Building Bridges between Law and Economics*, IBFD (2010), p. 631.

[367] Alexander Rust, "International Tax Neutrality and Non-Discrimination: A Legal Perspective", in M. Lang (ed.), *Tax Treaties: Building Bridges Between Law and Economics*, IBFD (2010), pp. 631 or Bruno Vinga Santiago, "*O princípio da não-discriminação no cruzamento do direito fiscal internacional com o direito fiscal comunitário"*, Lisboa, Centro de Estudos Fiscais, 2009, p. 45.

[368] See Niels Bammens, *The Principle of Non-Discrimination in International and European Tax Law*, IBFD Doctoral Series no. 24 (2012) pp. 84-85.

This confirms the understanding that construing the comparator does not require all the circumstances to be absolutely the same apart from the protected criterion but rather requires similarity of the relevant circumstances.[369]

Article 24 addresses in general (and excluding the stateless provision from this analysis) four different non-discrimination situations: paragraph 1 contains the so-called nationality clause and protects nationals of one Contracting State from discriminatory treatment in other Contracting State when compared to nationals of this latter State.
The remaining three situations targeted by this provision provide for protection regarding residents of one State from discriminatory taxation in the other contracting state. These situations are:

(i) the taxation of a permanent establishment in one Contracting State which an enterprise has in the other Contracting State (so-called permanent establishment clause) – paragraph 3;
(ii) the non-deductibility of interest, royalties and other disbursements paid by an enterprise of a Contracting State to a resident of the other Contracting State (so-called deductibility clause) – paragraph 4;
(iii) the taxation of enterprises of a Contracting State which are owned or controlled by residents of the other Contracting State ((so-called foreign ownership or foreign ownership clause) – paragraph 5;

From the overview of the clauses of Article 24 it is possible to make some general remarks. On a first glance the fact that the non-discrimination provisions apply not only to the taxes mentioned in Article 2 but to taxes of every kind and description.

The nationality clause (paragraph 1) provides for a general protection against discrimination based on such grounds. In addition, it has the particularity of applying beyond the subjective scope of tax treaties defined in Article 1 of the OECD Model, given that it applies to persons who are residents of neither of the Contracting States. From the broad wording of the nationality non-discrimination clause of Article 24 (1) of the OECD Model, it can be inferred[370] that it was written for States[371] which do not apply nationality as a tax jurisdiction basis. Differently?/?Conversely?, the other three provisions (paragraphs 3, 4 and 5), although recognizing that residents and non-residents are treated differently for tax purposes, they provide protection against discrimination based on residence but not on a

[369] Similarly, see Werner Haslehner, "Nationality Non-discrimination and Article 24 OECD – Perennial Issues, Recent Trends and New Approaches", in *Non-discrimination in tax treaties: selected issues from a global perspective* IBFD, Amsterdam (forthcoming).
[370] See Kees Van Raad, *Non-Discrimination in International Tax Law, Kluwer Law International,* The Hague (1986), p. 125.
[371] The United States are one of the very few exceptions. That is also the reason why the United States follows in its Model Convention with different wording to Article 24 (1) by stating that a non-resident US citizen and non-national of the other country are not in the same circumstances. The US Model Convention is available in Kees van Raad (ed.), *Materials in International & EC Tax Law*, 2014/2015, Vol. I, pp. 790-831.

general basis - as in the case of the nationality clause - but only in the specific situations stated therein. This is justified by the fact that residence is a criterion which most States define their jurisdiction to tax basis. In that regard, the scope of these provisions is considerably narrower as compared with the nationality clause of paragraph 1 as otherwise, a general and unconditional non-discrimination protection to non-residents would arguably make part of the distributive rules meaningless as it would affect the allocation of taxing rights, which is allowed under such provisions and which is based on the fundamental difference between residents and non-residents.

With regard to these three provisions which address discriminatory situations based on residence, paragraph 3 is the only one which refers to direct discrimination, given that it refers to the less favourable treatment suffered by the non-resident person itself (that is, the permanent establishment is part of the enterprise). The other two provisions in paragraphs 4 and 5 refer to situations of indirect discrimination: in both cases, what is at stake is the discrimination suffered by another person and not directly by the non-resident. Such indirect discrimination, however, is motivated by the fact that the resident of a Contracting State is related to a non-resident. In paragraph 4, the resident taxpayer may be suffering discrimination (no or limited deduction) due to the fact of making certain payments to a non-resident. In paragraph 5, the discriminatory treatment suffered by the resident taxpayer may be due to the fact that is owned directly or indirectly by a non-resident.[372]

Therefore, the difference between paragraphs 3 and 5 is also clear. Although both refer to discrimination based on residence, paragraph 3 protects enterprises which are directly owned by non-residents, that is, not through a separate legal entity, whereas paragraph 5 deals with resident enterprises operated by non-residents. In other words, paragraph 3 refers to activities carried directly by residents and paragraph 5 to the activities carried on indirectly, that is, through a separate legal entity. That is the reason why in paragraph 3, the taxpayer is a non-resident - a permanent establishment - and in paragraph 5 a resident - typically a subsidiary.

Finally, there is also a fundamental difference (at least in the wording) between paragraphs 1, 2 and 5 as compared to paragraph 3: those paragraphs prohibit not only a more burdensome taxation but also any requirement of other or more burdensome taxation.

[372] See Kees van Raad "Nondiscrimination from the Perspective of the OECD Model and the EC Treaty – Structural and Conceptual Issues", in Reuven S. Avi-Yonah, James R. Hines and Michael Lang (ed.), *Comparative Fiscal Federalism: Comparing the European Court of Justice and US Supreme Court's Jurisprudence*, Eucotax Series Vol. 14, (2008), pp. 59.

8.3. The relation of the non-discrimination principle with other provisions of tax treaties

The distributive rules of tax treaties allocate taxing rights. In that regard, Contracting States commit themselves to limiting the application of their tax laws[373] with the fundamental purpose of eliminating double taxation. Tax treaties do not determine how States should tax. In that regard, each State still applies its own law. That remains under the States competence which, however, is limited by the scope of the non-discrimination principle of Article 24 of the OECD MTC.

The 2008 amendments to Article 24 introduced paragraph 4 to the Commentary dealing with the interaction of the non-discrimination provision with the remaining treaty provisions:

> "[…] the provisions of the Article must be read in the context of the other Articles of the Convention so that measures that are mandated or expressly authorized by the provisions of these Articles cannot be considered to violate the provisions of the Article even if they only apply, for example, as regards payments to non-residents. Conversely, however, the fact that a particular measure does not constitute a violation of the provisions of the Article does not mean that it is authorized by the Convention since that measure could violate other Articles of the Convention."

Therefore, while the distributive rules determine which of the Contracting States may exercise the right to tax a certain type of income, the non-discrimination articles regulates the way in which that right can be exercised.[374] States are free, within the range of the distributive rules, to exercise their taxing powers but they cannot do such by providing discriminatory treatment which falls within the protected scope of the non-discrimination provision. A clear example arises from the application of Article 7 concerning the taxation of business profits. In that regard, the Commentary[375] refers to that paragraph 2 of this provision:

> "[…] determines the profits that are attributable to a permanent establishment for the purposes of the rule in paragraph 1 that allocates taxing rights on these profits. Once the profits that are attributable to a permanent establishment have been determined in accordance with paragraph 2 of Article 7, <u>it is for the domestic law of each Contracting State to determine whether and how such profits should be taxed as long as there is conformity</u> with the requirements of paragraph 2 and the <u>other provisions of the Convention</u> […]. (underscore BdS)

[373] See K. Vogel, "Double Tax Treaties and Their Interpretation", 4 *International Tax & Business Law* 1, 1986, p. 22-23 or M. Lang, *Introduction to the Law of Double Tax Conventions,* IBFD/Linde, (2010), p. 31.

[374] Werner Haslehner, "Nationality Non-discrimination and Article 24 OECD – Perennial Issues, Recent Trends and New Approaches", in *Non-discrimination in tax treaties: selected issues from a global perspective* IBFD, Amsterdam (forthcoming).

[375] See paras. 30 and 33 of the Commentary to Article 7 of the OECD Model.

> In taxing the profits attributable to a permanent establishment situated on its territory a Contracting State will, however, have to take into account of the provisions of paragraph 3 of Article 24."

The combined application of the distributive rules and the non-discrimination provision, therefore, leads to the existence of a double layer of obligations[376] which have to be satisfied by the Contracting States in order to achieve a correct application of a tax treaty:

(i) States may have to waive or limit their taxing rights pursuant to the application of a distributive rule;

(ii) The taxation (even that restricted through the application of the relevant treaty provisions) may not lead to a situation in which foreigners are treated less favourably then nationals or residents.

Another issue may concern the situation of whether a discriminatory treatment which is directly caused by the provisions of a tax treaty can be considered to breach the non-discrimination clause of the said treaty. In other words: is there a possible conflict between allocation rules and non-discrimination provision? This relation is illustrated by the judgement in *Metchem Canada Inc.*[377] The case dealt with a Canadian company which carried on a business in India through a permanent establishment. The Indian permanent establishment deducted some expenses which were related to the head office in Canada. Such deduction was denied as falling under the Indian Income Tax Act that was limited to companies resident in India. The Court considered that although Article 7 of the DTC India/Canada preserved the domestic law restrictions, Article 24 (2) of the said treaty (identical to paragraph 3 of the OECD MTC) required that the deduction of the expenses should be allowed without placing any restriction on such deduction save and except such restrictions also applied to resident enterprises. In fact, such limitation led to a less favourable treatment of the permanent establishment in India as compared to Indian resident companies, which amounted to a discriminatory treatment under Article 24.[378] The Court noted that Article 24 is included in Chapter VI of the treaty under "specific provisions" while Article 7 refers to "taxation of income". Therefore the Court concluded that the provisions of Article 24 constituted specific provisions whereas the provisions of Article 7 are general provisions, being that the non-discrimination prevailed over the deduction limitation set forth under Article 7. The outcome of this judgement is arguably incorrect. First of all there is nothing that determines that non-discrimination article is specific in the sense that supersedes the application of the allocation rules. On the contrary, it can also be argued that a rule that (specifically) creates an exception to the non-

[376] See Alexander Rust, "International Tax Neutrality and Non-Discrimination: A Legal Perspective", in M. Lang (ed.), *Tax Treaties: Building Bridges Between Law and Economics*, IBFD (2010), pp. 632.

[377] See *Metchem Canada Inc. v Deputy Commissioner of Income Tax*, Income Tax Appellate Tribunal of Mumbai, 30 September 2005, 8 ITLR, pp. 1043-1052.

[378] It is interesting to note in particular para. 7 of the judgement which considered the provisions of Article 24 to be specific provisions whereas Article 7 to be in the nature of general provisions. Therefore the Court concluded that the provisions of Article 7 were required to be read as subject to the provisions of Article 24.

discrimination provision can be said to reveal a clear intention to supersede Article 24.[379] In addition, a proper interpretation of a tax treaty should try to achieve an interpretation which is consistent with the whole treaty. Part of the context for the interpretation of a treaty provision includes the other provisions of such tax treaty. This is actually what derives from the OECD Commentary to Article 24 when stating that:[380]

> […] the provisions of the Article must be read in the context of the other Articles of the Convention so that measures that are mandated or expressly authorised by the provisions of these Articles cannot be considered to violate the provisions of the Article even if they only apply, for example, as regards payments to non-residents. […]

This conclusion does not necessarily infer that a State can rely on the mere application of the distributive rules in order to provide for discriminatory treatment. The interaction between non-discrimination and the remaining tax treaty provisions cannot be to give an absolute subsidiary role to Article 24 in the sense that anything that is authorized by other treaty provisions necessarily complies with the prohibited grounds of discrimination. It is always relevant to determine whether domestic legislation as such does not give rise to a disadvantageous treatment. A good example may be found in decision of the B*undesfinanzhof*.[381] The case dealt with the relation between Article 8 (2) of the Double Tax Treaty concluded between Germany and the Philippines and the PE non-discrimination clause. The distributive rule of the treaty referred to allowed the Source state to levy tax on 1.5% over the gross receipts. The enterprise at stake had a PE in Germany which suffered a loss. Despite such loss the German tax authorities relied on Article 8(2) of the Treaty to levy tax over 1.5% of the gross receipts.

The BHF correctly concluded that both rules should be respected simultaneously considering that there was a discriminatory treatment as a similar resident enterprise in Germany would have been taxed on a net basis. The application of the distributive rule as such would lead to a less favourable taxation of the PEs. The difference, in my view, as to the outcome of the *Metchem Canada* case is that in this case, the distributive rule specifically provided for a limitation on the deduction on the expenses pursuant to the domestic law being that the intention of the two States was clearly to preserve such different treatment which should then be immune to the non-discrimination article. Different in this case from the BFH is that there is nothing in the distributive rule as such that creates such difference in treatment. This difference arises exclusively from the German domestic laws. Therefore, there should be a simultaneous application of both distributive rules and non-discrimination article.

---

[379] See Niels Bammens, *The Principle of Non-Discrimination in International and European Tax Law*, IBFD Doctoral Series no. 24 (2012) pp. 144-145.

[380] See para. 4 of the Commentary to Article 24 of the OECD MTC.

[381] BFH IStR 16 (1998), p. 504 reported by Alexander Rust, "International Tax Neutrality and Non-Discrimination: A Legal Perspective", in M. Lang (ed.), *Tax Treaties: Building Bridges Between Law and Economics*, IBFD (2010), pp. 633.

8.4. Tax Policy underlying the non-discrimination principle

The non-discrimination article in tax treaties specifies several criteria which Contracting States may not use as a basis for tax discrimination. Article 24 of the OECD MTC contains five different provisions which are aimed at prohibiting a discriminatory treatment of a taxpayer in particular circumstances. Such non-discrimination clauses are part of one of the most interesting, but at the same time intriguing, articles of tax treaties. They constitute what has been said[382] to be an "incoherent collection of fairly narrow clauses" having no obvious relation to the other articles of the treaty. Much of the controversy surrounding the application and interpretation of the non-discrimination provisions involves determining their exact scope.[383]

Therefore, a fundamental question to be addressed when interpreting the non-discrimination article in tax treaties is to determine the purpose that States try to achieve by adopting a non-discrimination principle in their treaties. Looking back to the origins of the OECD MTC, its history sheds little light on providing an answer to the question. In fact, it only seems to confirm that there was no overview of the policy regarding the non-discrimination article.[384] Therefore, it is not surprising that different theories have arisen on how to explain the purpose of Article 24.
It has been argued that the rationale behind the non-discrimination article would be to achieve Capital Export Neutrality (CEN),[385] as this article only imposes obligations on the source State by somewhat limiting its taxing rights. From the perspective of the State of residence, there is no obligation – aside from double taxation relief – that prevents that State from discriminating.

Related to this purpose is the fact that, to a certain extent, the protection against discrimination helps prevent excessive credit obligations.[386] In other words, the non-discriminatory taxation for investments made in the Host State would be related to the relief of double taxation in the Origin State. This can be demonstrated, for instance, where an enterprise of a Contracting State has a PE in the other State and the State of residence of the enterprise applies a credit system, preventing a less favourable taxation of the PE under Article 24 (3), while also protecting the State of residence from excessive credit obligations. Similarly, if the State of residence of the shareholder applies an indirect credit,

---

[382] See Kees Van Raad "Issues in the Application of Tax Treaty non-discrimination clauses", *Bulletin of International Fiscal Documentation* 8/9 (1988), p. 347.
[383] See Philip Baker, note on *Metchem Canada Inc. v Deputy Commissioner of Income Tax*, Income Tax Appellate Tribunal of Mumbai, 30 September 2005, 8 ITLR, p. 1044.
[384] See John F. Avery Jones, "Understanding the OECD Model Tax Convention: The Lesson of History", 10 *Florida Tax Review* 1, p. 49.
[385] See Brian Arnold, *Tax Discrimination Against Aliens, Non-Residents and Foreign Activities: Canada, Australia, New Zealand, the United Kingdom, and the US*, Canadian Tax Paper no. 90, Canadian Tax Foundation (1991), p. 27.
[386] See Alexander Rust, "International Tax Neutrality and Non-Discrimination – A Legal Perspective", in M. Lang et al (eds.) *Tax Treaties: Building Bridges between Law and Economics*, IBFD (2010), p. 647.

Article 24 (5) will protect this State from excessive credit obligations. However this rationale for the non-discrimination provision is not apparent in the cases of either Article 24 (1) or Article 24 (4). In the first case, the nationality provision will not be frequently argued where a taxpayer seeks double tax relief in its State of nationality.[387] Similarly, in the case of the deductibility provision, the double tax relief status of the recipient of the income bears no relation to the tax treatment (the deduction limitation) provided to a domestic payer, unless of course the recipient of the income happens to also be a shareholder of the payer.

Differently, it has also been argued[388] that the treaty non-discrimination rule is more closely related to Capital Import Neutrality (CIN) by imposing on source States an obligation to tax investments equally irrespective of whether domestic or foreign residents own those investments. The non-discrimination principle ensures that, to the extent that foreign persons are liable to tax, they are not subject to less favourable tax rules than those imposed on domestic persons. In this sense, the non-discrimination treatment would be implemented by source countries avoiding placing an extra burden upon foreign persons and their businesses conducted in those countries.[389] In practice, the treaty non-discrimination article would represent a commitment of the source-country of not taxing nationals or residents of its treaty partner more heavily that it taxes its own nationals or residents.[390] On the whole and by limiting the taxing rights of the source State in certain situations, the non-discrimination provision would be achieving a level playing field for all investments made in the source State.

In this regard it can even be considered that, depending on the perspective, the non-discrimination article helps to accomplish both CIN and CEN.[391] This illustrates that there

---

[387] In the case of a taxpayer national from one State, resident in another State and receiving income from a third State, such taxpayer may want to invoke the tax treaty between his State of nationality and the State where the income arises to ensure that he is not subject to other or more burdensome taxation when compared with a national of the State where the income arises which happens to also be a resident in the same State of the taxpayer. While in this case the taxpayer is being discriminated by the State where the income arises, he is not seeking double tax relief from his State of nationality (the protected element under paragraph 1).

[388] See Robert A. Green, "The Troubled Rule of Nondiscrimination in Taxing Foreign Direct Investment", 26 *Law & Policy in International Business* (1994-1995), pp. 134-135 or S. H. Goldberg and P. Glicklich, "Treaty-Based Nondiscrimination: now you see it now you don't", 1 *Florida Tax Review* 2 (November 1992), p.53

[389] See, American Law Institute, Federal Income Tax Project, *International Aspects of United States Income Taxation II, Proposals on United States Income Tax Treaties* (1992), p. 253

[390] It should be considered, however, that the distinction between residence and source taxation is the essence of the differentiation in tax treaties by the allocation of taxing rights between States. Therefore, confusion should not be made between jurisdiction basis and grounds for non-discrimination. The jurisdictional basis is by itself discriminatory in the sense that makes a distinction. That is, as said, an accepted distinction as it is the standard rule of the structuring of domestic income tax systems and tax treaties. See, Kees Van Raad, *Non-Discrimination in International Tax Law, Kluwer Law International,* The Hague (1986), p. 75.

[391] See Alexander Rust, "International Tax Neutrality and Non-Discrimination – A Legal Perspective", in M. Lang et al (eds.) *Tax Treaties: Building Bridges between Law and Economics*, IBFD (2010), p. 647.

are indeed different approaches to the purpose of the non-discrimination article and that it is not easy to find an overarching rationale as to explain tax treaty non-discrimination clauses.[392]

In all events, the ultimate purpose of tax treaties is to facilitate international trade by minimizing tax barriers in the exchange of goods and services across national boundaries.[393] Tax treaties were originally developed to prevent double taxation and that is still their main purpose. But from a broader perspective, the role of tax treaties is indeed not merely confined to avoiding or mitigating double taxation. Tax treaties have multiple purposes[394] such as the prevention of double non-taxation, the resolution of tax disputes and some forms of tax non-discrimination.[395] Illustrative of this, the Commentary provides that:[396]

> In both the 1963 Draft Convention and the 1977 Model Convention, the title of the Model Convention included a reference to the elimination of double taxation. In recognition of the fact that the Model Convention does not deal exclusively with the elimination of double taxation but also addresses other issues, such as the prevention of tax evasion and non-discrimination […].

The non-discrimination principle is not an allocation rule and thus has no link with double taxation problems.[397] This lack of relation with the remaining treaty articles is reflected precisely in the fact that, in most tax treaty provisions – the rules from Article 6 to Article 23 – are directed at the avoidance of double taxation. However, the non-discrimination provision fits into the general aim to promote the free movement of persons, business and capital. In that regard, it pursues the tax treaties' purpose[398] of fostering economic relations,

---

[392] See Mary C. Bennett, "The David R. Tillinghast Lecture: Nondiscrimination in International Tax Law: A Concept in Search of a Principle", 59 *Tax Law Review*, pp. 463-466 or Lara Friedlander, "The role of non discrimination clauses in bilateral income tax treaties after GATT 1994", *British Tax Review* 2 (2002), pp. 74-77.

[393] See Richard L. Doernberg, "Overriding Tax Treaties: The U.S. Perspective", 9 *Emory Int'l Law Review*, (1995) p. 71.

[394] In this regard, see Stef van Weeghel, *The Improper Use of Tax Treaties*, Kluwer, Cambridge (1998), pp. 33-36, who identifies three purposes of bilateral income tax treaties: the avoidance of double taxation, the prevention of abuse and the prevention of discrimination. In the same sense see, *inter alia*, K. Vogel and R. Prokisch, General Report, "Interpretation of Double Tax Conventions", *Cahiers de droit fiscal international*, Vol. LXXVIIIa (Deventer: Kluwer, 1993), p. 72 and Luc de Broe, *International Tax Planning and Prevention of Abuse: A Study under Domestic Tax Law, Tax Treaties, and EC Law in Relation to Conduit and Base Companies*, IBFD Doctoral Series Vol. 14 (2008), p. 248.

[395] See *inter alia*, Frank Engelen, *Interpretation of Tax Treaties under International Law*, IBFD Doctoral Series no. 7 (2004), p. 428 or Philip Baker, *Double Taxation Conventions*, Sweet & Maxwell (3rd edition), p. B-7.

[396] See para. 16 of the Commentary to the OECD MTC.

[397] See OEEC Report 1958.

[398] In this sense see, for instance, the remarks made by the ITA Tribunal in case *DaimlerChrysler India Private Limited v Deputy Commissioner of Income Tax* of 21 January 2009, paras. 22 and 29:

> "22. No doubt nondiscrimination provisions in the tax treaties do contribute to promotion of mutual economic relations, trade and investment between two countries. By virtue of these

trade and investment[399] given that it tackles situations that could deter trade and the movement of capital or goods arising due to the negative tax treatment given to nationals or residents of other Contracting States. Ultimately it can be said that the purpose of the tax non-discrimination principle is to promote economic efficiency.[400] This objective and purpose of the non-discrimination provision can actually be traced back to the history of Article 24. In connection with the preparation of the Model Convention, the (at the time) OEEC Fiscal Committee constituted Working Parties, one of which (WP4) was in charge of the discussions concerning tax discrimination. When dealing with the need for including a non-discrimination provision, WP4 produced the following statement:[401]

> The Working Party believes that the principle set out in the provision suggested in page 7 of its Report is of great importance for the development of commercial and industrial activity across the frontiers. The replies to the questionnaire which it circulated have shown beyond doubt that the form of discrimination in question here occurs but very rarely in the Member Countries of the O.E.E.C. It feels, however, that the value of the provision, as indeed of the Article as a whole, is this, that the Member countries of the O.E.E.C., by their formal adherence to the principle of non-discrimination will help to propagate this principle which is so vital for the development of international economic relations. For this reason, the Working Party considers it must maintain its proposal in its entirety so for as this particular point is concerned.

While considering that the non-discrimination provisions would not be particularly important as it was thought that tax discrimination was quite rare – although subsequent practice has demonstrated otherwise – the WP4 considered relevant to include such provision due to the objective of promoting international trade.

Whether the proper identification of the purposes of tax treaties and the distinction with its ultimate purpose appears to be a quite theoretical discussion, the fact is that it is of relevant consequence for the treaty interpretation due to the reference in Article 31 (1) of the Vienna Convention on the Law of Treaties to an interpretation in light of its "object and purpose".[402] The reference to the "object and purpose" of the treaty includes, according to

---

> provisions, level playing field is afforded to the residents of one of the Contracting States in the other Contracting State as well. […]
> As a corollary to this, trade and investments in the host country are encouraged, and, therefore, mutual economic relations also improve.
> […]
> 29. […] in today's world the role of tax treaties is not only confined to avoiding double taxation or to giving relief in respect of an income taxed twice; […] These are instruments of encouraging trade, investment and mutual economic relations, and we must take a holistic view of the things as such."

[399] See concurrently Niels Bammens, *The Principle of Non-Discrimination in International and European Tax law*, IBFD Doctoral Series no. 24 (2011), p. 52.

[400] See Ruth Manson and Michael S. Knoll, "What is tax discrimination?", *The Yale Law Journal* (2012), p. 1034.

[401] See FC/WP42, of 10 May 1957, Working Party no. 4 of the Fiscal Committee (Netherlands-France): Supplementary report on tax discrimination on grounds of nationality or similar grounds, p. 6.

[402] See Jacques Sasseville, "The Role of Tax Treaties in the 21st Century", *Bulletin-Tax Treaty Monitor* 6 (IBFD) 2002, p. 247, footnote 5.

Article 31 (1), the entire treaty and not the purpose of single treaty provisions.[403] This, however, does not exclude a functional perspective (that is, to consider its specific purpose) when analysing the text of a single provision. A teleological interpretation can be based on all objects and purposes that can be derived from a tax treaty[404].This purposive or teleological interpretation is to be applied primarily to the provisions which do not directly address the main purpose of avoidance of double taxation but to provisions with special purposes[405]such as the non-discrimination.[406]

8.5. Analysis of the relevant paragraphs of Article 24

The different paragraphs of Article 24 list the circumstances that, for tax treaty purposes, should not be subject to discriminatory treatment. As referred, for the purposes of determining if a particular situation is protected under one of the clauses of Article 24 a test should be performed by comparing the taxpayer with an hypothetical situation in which it would either be a national or a resident of the other contracting state pursuant to one of the paragraphs of Article 24. If in that hypothetical situation the taxpayer would benefit from the application of the relevant legislation, then the non-discrimination provision is being breached. It is not required that all circumstances are entirely identical except in what refers to the specific factor protected under one of the non-discrimination provisions. It requires that "the relevant factor" for the adverse treatment is within one of the paragraphs of Article 24.

The following sections analyse the circumstances protected under each of the clauses of Article 24 defining also the scope of protection granted by the respective provisions.

8.5.1 The nationality clause: Article 24 (1)

Paragraph 1 of Article 24 states as follows:

> "Nationals of a Contracting State shall not be subjected in the other Contracting State to any taxation or any requirement connected therewith, which is other or more burdensome than the taxation and connected requirements to which nationals of that other State in the same circumstances, in particular with respect to residence, are or

[403] See John F. Avery Jones, IFA Report UK "Interpretation of Double Tax Conventions", *Cahiers de Droit Fiscal International* Vol. 78a, (1993), p. 602.
[404] See Ekkehart Reimer, "Interpretation of Tax Treaties", *European Taxation* 12 IBFD (1999), p. 459.
[405] See Klaus Vogel and Rainer Prokisch, IFA General Report "Interpretation of Double Tax Conventions", *Cahiers de Droit Fiscal International* Vol. 78a, (1993), pp. 72-73.
[406] In this regard, it has been argued that the different purpose of the non-discrimination article would justify performing an interpretation (primarily) from a different perspective: focused on the taxpayer rather than on the allocation of taxing rights between Contracting States. While the exact scope of this reasoning is not entirely clear in my view, I believe it enhances the fundamental idea of applying a purposive interpretation to Article 24. See Werner Haslehner, "Tackling complex discrimination in international taxation", *British Tax Review* 5 (2012), p. 598.

> may be subjected. This provision shall, notwithstanding the provisions of Article 1, also apply to persons who are not residents of one or both the Contracting States."

The purpose of this provision is to prevent situations of distinctions in tax law which are nationally-based. In that regard, it provides that less favourable tax treatment on grounds of nationality is forbidden.

As to its wording, the existence of a discriminatory situation falling within the scope of this paragraph requires the following requirements to be met: (a) there must be nationals of one Contracting State (the subject of non-discrimination), which are (b) subject to other or more burdensome taxation and connected requirements (discriminatory treatment) when compared to (c) nationals of the other Contracting State in the same circumstances (object of comparison), due to (d) the different nationality (reason for discrimination).

8.5.1.1 Subject of non-discrimination: nationals of one Contracting State

The nationality criterion which assumes relevance for the purpose of paragraph 1 of the non-discrimination clause is a criterion which derives from civil (corporate) law and in itself does not correspond with tax liability which is identifiable with residence in accordance with Article 4.

Since no distinction is made, the personal scope of this provision covers both individuals and companies. For the purposes of this analysis, the relevance is exclusively to companies.[407] The definition of nationality of companies is stated in Article 3 (1) (g) (ii) by reference to the laws in force from which companies derive their status in the corresponding Contracting State. There are various criteria used for determining the nationality of a company.[408] A common criterion for nationality within the EU is that a company is governed by the law of the country where it has its (real) seat, that is, its central management administration.[409] The Commentary[410] however seems to favour[411] the criterion of incorporation which is that nationality status is usually derived from the laws in force in the State in which the company was incorporated or registered.

---

[407] The Tax Treaties of some countries – e.g. Canada, France – limit the personal scope of paragraph 1 to individuals.

[408] See Kees Van Raad, *Non-Discrimination in International Tax Law*, Series on International Taxation no. 6, Kluwer Law International, The Hague (1986) p. 81.

[409] See John F. Avery Jones et al, "The Non-discrimination Article in Tax Treaties – part II", *British Tax Review* 11 (1991), p. 368.

[410] See para. 17 of the OECD Model Commentary to Article 24.

[411] See António Moura Portugal, "Estatuto Pessoal e Nacionalidade das Sociedades Nos Acordos de Promoção de Investimentos e nos Acordos de Dupla Tributação Celebrados por Portugal", *Cadernos de Ciência e Técnica Fiscal* n.º 404, pp. 88-94.

This form of discrimination is not very common. The reason is naturally because the tax legislation of States usually relies on taxpayers having their residence therein[412] which, therefore, is the criterion used for providing distinctions, rather than nationality. In many countries[413] the relevant criterion (or one of the relevant criteria) for tax residence purposes is identical to the relevant criterion for determining the nationality of a company[414] (most typically place of incorporation). While some States use a single criterion to determine a company's residence, many other States use several tests which may be cumulative or alternative (that is, residence exists as soon as one of the criteria is satisfied).[415] As it will be better analysed below,[416] when testing the application of paragraph 1 to tax group situations, the practical effect of the nationality provision arises due to the fact that many countries use not only the criterion of place of incorporation but also other criteria, such as the place of effective management to define residence for tax purposes.[417] Therefore, if such a country has an income tax provision that distinguishes between two companies based on their place of incorporation (a common example is by providing for a cumulative criterion of both place of incorporation and place of effective management in order for a certain provision to apply) that provision may be in breach of Article 24 (1) if the other company, although not incorporated, is effectively managed in that State. In that case, both companies will be considered as residents for tax purposes under the applicable domestic laws of a State and the reason for the different treatment may rely on the fact that one of the companies was not incorporated (that is, is not a national) of that State. In other words, the discriminatory treatment arises due to the fact that such State imposes a nationality requirement combined with a residency requirement when applying a certain rule.

On the other hand, in the case place of incorporation is the only criterion also for determining residence in a particular State, the first part of paragraph 1 ends up, in practice, not being applied. This is due to the fact that a foreign company (that is, incorporated under the laws of another State) will always be considered – in the State where the comparison is required – as non-resident. Therefore, in such scenario one will never be before a case of two companies with different nationalities but resident in the same State.

---

[412] This fact had already recognized by the OEEC Working Party 4 which was in charge of drafting the non-discrimination provisions where in its *report on tax discrimination on grounds of nationality or similar grounds* dated 11 January 1957 (FC/WP4/ (57) 1), states that "this form of discrimination only occurs exceptionally."

[413] See Luc Hinnekens and Philipe Hinnekens, IFA General Report, "Non-discrimination", *Cahiers de droit fiscal international*, Vol. 93a, (2008), p. 24.

[414] This is the reason why discrimination based on nationality regarding individuals is even less frequent since in most countries, nationality does not play any role in the taxation of individuals (one of the very few exceptions, as said, is the United States).

[415] See Jean-Marc Riviére, IFA General Report, "The fiscal residence of companies", Cahiers *droit fiscal international*, Vol. 72a, (1987), pp. 58-59.

[416] See 9.2.1 *infra*.

[417] See Mary C. Bennett, "The David Tillinghast Lecture: Nondiscrimination in International Tax Law: a concept in search of a principle", 59 *Tax Law Review* 4, New York (2006), p. 446.

The second part of paragraph 1 contains an exception to Article 1 of the OECD MTC: the person who may be discriminated against may be a resident of neither States. This last sentence stresses that the relevant criterion for assessing the existence of a forbidden discrimination under this provision is nationality and not residence. In a situation where a national of one State which is non-resident in that State is subject to a more favourable treatment than a non-resident which is simultaneously a non-national of that State, paragraph 1 may be triggered as the relevant comparison evidences that the difference in the treatment relies on the nationality of one of the persons involved.

8.5.1.2 Object of comparison: same circumstances in particular with respect to residence

The comparator used under paragraph 1 of Article 24 deserves several comments. A preliminary remark is to mention that the expressions currently used - "*same circumstances*" and "*in particular with respect to residence*" - were not originally included in the non-discrimination provision. The first one to be included has its roots in the negotiations of the UK-Switzerland Treaty concluded in 1954, where the UK suggested the expression "in the like circumstances" to be included in both the nationality and the foreign ownership provision of Article 24 (5).[418] Later, Belgian and Switzerland proposed during the meetings of the Working Party 4 of the then OEEC, that a draft provision of the non-discrimination on grounds of nationality should include the reference "in identical/similar circumstances". The Working Party 4 was of the opinion that such addition was unnecessary as it considered obvious that the non-discrimination provision could not be extended to give to foreign nationals the same treatment as a country's own nationals which were placed in different tax circumstances. In any case, it agreed with the inclusion of the expression "in the like circumstances"[419]. The final wording adopted was the one now stated in the OECD Model: "in the same circumstances".[420]
According to the Commentary[421] this expression:

> "[…] refers to taxpayers (…) placed, from the point of view of the application of the ordinary taxation laws and regulations, in substantially similar circumstances both in law and in fact."

This statement is ambiguous and deserves some remarks. First, the reference to same as meaning *substantially* similar seems to be unnecessary. Second, one may also question the need to require similarity in facts. The existence of a discriminatory situation requires a comparison between the real situation and the hypothetical situation regarding which the taxpayer considers to be discriminated. Identity of all (relevant) facts except the protected

[418] See John Avery Jones, "Understanding the OECD Model Tax Convention: The Lesson of History", 10 *Florida Tax Review* 1 (2009), pp. 33-34.
[419] See the *Supplementary Report on Tax Discrimination on Grounds of Nationality or Similar Grounds,* prepared by the OEEC Working Party 4 of the Fiscal Committee dated 10 May 1957 (FC/WP4 (57)2), available at http://www.taxtreatieshistory.org/.
[420] See the *Final Report on Tax Discrimination on Grounds of Nationality or Similar Grounds* prepared by the OEEC Working Party 4 of the Fiscal Committee dated 19 February 1958 (FC/WP4 (58)1), available at http://www.taxtreatieshistory.org/.
[421] See paragraph 7 of the Commentary to Article 24 (1) of the OECD Model.

situation under the non-discrimination clause is the basic presupposition for claiming the discriminatory treatment. Similarity of all the relevant facts is then inherent to the concept of non-discrimination[422] and demonstrates that as initially sustained by the OEEC Working Party 4, the reference to same circumstances is redundant.[423] Finally, it is also difficult to understand the reference to similar circumstances in law. Typically the different applicable legislation – the differentiation that it makes based on nationality - is the precise cause for discrimination. Therefore, either the discriminatory legal provision is excluded from the relevant circumstances in law or this requirement is simply disregarded.[424] Otherwise the consequence would be that it could not be possible to claim protection of different treatment based on nationality as the similar circumstances in law requirement would never be met as the discriminatory law itself provides for the differentiation.

The interpretation of the expression "*same circumstances*" by case law[425] was made in the following terms:

> "The word "same" carries the connotation of uniformity, of exactness in comparison. The phrase does not ordinarily mean in roughly similar circumstances: it means in substantially identical circumstances, and in Art XIX(1) it means in substantially identical circumstances in all areas except nationality. Can then the difference in residence be accepted in this case as a valid basis for applying a different tax rate or must nationality be seen as the true basis of the distinction made".

The reference to "*in particular with respect to residence"* was only added much later in the OECD Model revision of 1992. One may also question the need to add this reference.[426] It appears that the expression "same circumstances" would, by itself, be sufficient to establish that a taxpayer who is resident of a Contracting State and one who is not resident of that same State are not in the same circumstances.[427] Given that the OECD Model proceeds on

---

[422] See Kees van Raad, "Issues in the Application of Tax Treaty Non-Discrimination Clauses", *Bulletin* 8/9 IBFD 1988, p. 350.

[423] See Kees van Raad, *Non-Discrimination in International Tax Law*, Series on International Taxation no. 6, Kluwer Law International, The Hague (1986) pp. 88-89.

[424] See Kees van Raad, "Issues in the Application of Tax Treaty Non-Discrimination Clauses", *Bulletin* 8/9 IBFD 1988, p. 350 and John Avery Jones, "Understanding the OECD Model Tax Convention: The Lesson of History", 10 *Florida Tax Review* 1 (2009), p. 34.

[425] See para. 21 of *Commission of Inland Revenue v United Dominions Trust*, 1973 NZTC 61,028.

[426] This addition was seen as a *useful clarification* (paragraph 7 of the Commentary to Article 24 (1) of the OECD Model). Its inclusion appears to have been influenced by the judgment of the Court de Cassation of December 1990 in case *Société Royal* referred to in footnote 203 *infra*.

[427] See paragraph 7 to Commentary to Article 24 (1) of the OECD Model. A different understanding, however, was followed by the French Court in case *Société Royal*, Cour de Cassation, Case 88-154 44, 21 December 1990, referred to in John Avery Jones & Catherine Bobbet, "Interpretation of the Non-Discrimination Article of the OECD Model", *Bulletin for International Taxation* 2, IBFD (2008), p. 50. The case dealt with the application of the 3% taxation on the value of immovable property which was charged on non-residents which did not disclose their shareholders. The Cour de Cassation considered that, as the concept of residence and nationality are equivalent when dealing with legal persons, Article 24 (1) would forbid the application of such tax to non-residents as it would constitute an (indirect) discrimination against nationality. The reasoning of this decision seemed to rely on the fact that, as referred to, many countries use nationality as one of the criteria

the basis of different treatment between residents and non-residents,[428] the logical inference would be that residents and non-residents are not in the same circumstances.[429] That is the reason why a situation will fall under paragraph 1 only when the discriminatory treatment is based on nationality but all other relevant factors for taxation, including residence,[430] are the same.[431] Therefore, whenever the circumstance of residence is not an irrelevant factor in the taxation of a certain situation, the different treatment is allowed. On the other hand, discriminatory taxation may be forbidden under paragraph 1 if the residency factor is clearly irrelevant or unimportant for the tax rule in question. This remark is particularly relevant for companies since as already mentioned, in many countries incorporation or registration is the relevant criterion both for nationality and (at least one of the criteria) for residence. In accordance it becomes necessary in those cases to determine if the company's negative treatment arises due to the different nationality – case in which it is forbidden under paragraph 1 – or due to the different residence which it is allowed under tax treaties[432].

The criterion for residence which, therefore, is a determinant issue for the purpose of filling the comparator of "*same circumstances*" does not have any specific rule under the non-

---

to trigger residence for tax purposes. And it stresses the need to determine in each particular case whether the reason for the difference in treatment is the residence of the taxpayer (in which Article 24 (1) would not apply) or its nationality.

[428] See para. 17 of the OECD Model Commentary to Article 24.

[429] However, Kees van Raad states that prior to the amendments of the OECD MTC in 1992, it could be argued that a proper interpretation of para 1. required a subsidiary country that employed corporate nationality as a basis for tax liability on worldwide income (i.e. residence), to exempt withholding taxes paid to a non-resident parent company in the same way as paid to a resident parent company. In those cases the denial of such exemption to companies of foreign nationality as compared to locally organized companies is effectively a denial of the exemption to a non-resident company (as compared to a resident company). See Kees van Raad, "Intercompany Dividends and Non-Discrimination under the OECD Model", in G. Maisto (ed.) *Taxation of Intercompany Dividends under Tax Treaties and EU Law*, EC and International Tax Law Series, Vol. 8, IBFD (2012), p. 162.

[430] As referred to in para. 20 of case *Commission of Inland Revenue v United Dominions Trust*, 1973 NZTC 61,028:

> "[…]*it is not disputed that the purpose of para (1) is to prevent discrimination on the grounds of nationality, but, I must stress, <u>only when the circumstances upon which taxation is based are the same</u> between two being compared*." (underscore BdS)

[431] A good example may be found in the decision of the French Court in the *Denkavit* case. The taxpayer, Denkavit International BV claimed the refund of tax withheld upon distribution of dividends which was not applicable in case of domestic distributions based, *inter alia*, on the nationality clause of Art. 25 (1) of the Double Tax Treaty concluded between France and the Netherlands. The Court refused the taxpayer's claim based on this argument considering that the requirement of similarity of circumstances between Denkavit International BV and French parent companies was not verified in this case as the first company was not subject to tax in France. This reasoning is correct as the refusal by France to apply a (withholding) tax exemption in the cross- border dividend case under discussion, however, was not based on the parent company not being a *national* in France but rather on the parent company not being a *resident* of that country. See *Court Administrative d'appel de Nantes*, Case 97NT01922, Decision of 13 March 2001.

[432] See para. 17 of the OECD Model Commentary to Article 24.

discrimination clause. Therefore, the general rules of Article 4 for determining residence[433] for tax treaty purposes apply. This conclusion clearly arises from the Commentary[434] which states that the provisions of Article 24 must be read in the context of the other Articles. As a consequence;[435]

> "[…] When Article 24 is read in the context of the other Articles of the Convention, most of which provide a different treatment of residents and non-residents, it is clear that two companies that are not residents of the same State for purposes of the Convention (under the rules of Article 4) are usually not in the same circumstances for purposes of paragraph 1" (underlined BdS)

In fact, if determining the relevant residence for tax treaty purposes is required in order for the distributive rules to apply, it seems a natural outcome to the same for the purpose of the object of the comparison under paragraph 1 of Article 24.[436] This is particularly relevant in the case of dual residence situations affecting companies. In that regard, the Commentary reflects the need to take into account the tie-breaker rule when applying the nationality clause to tax group situations[437] in order to determine similarity of circumstances. In fact, the effect of a tie-breaker in dual-residence situations may turn a situation into a non-similar circumstance or vice-versa. The following examples provided in the Commentary[438] illustrate this issue:

> 20. Example 1: Under the domestic income tax law of State A, companies incorporated in that State or having their place of effective management in that State are residents thereof. The State A - State B tax convention is identical to this Model Tax Convention. The domestic tax law of State A provides that dividends paid to a company incorporated in that country by another company incorporated in that country are exempt from tax. Since a company incorporated in State B that would have its place of effective management in State A would be a resident of State A for purposes of the State A - State B Convention, the fact that dividends paid to such a company by a company incorporated in State A would not be eligible for this exemption, even though the recipient company is in the same circumstances as a company incorporated in State A with respect to its residence, would constitute a breach of paragraph 1 absent other relevant different circumstances.
>
> 21. Example 2: Under the domestic income tax law of State A, companies incorporated in that State are residents thereof and companies incorporated abroad are non-residents. The State A - State B tax convention is identical to this Model Tax Convention except that paragraph 3 of Article 4 provides that if a legal person is a resident of both States under paragraph 1 of that Article, that legal person shall be deemed to be a resident of the State

[433] As analysed *supra* in 7.5.2, Article 4 (1) defines the term "resident" by way of a reference to the domestic law of the Contracting State in which residence is being claimed.
[434] See para. 4 of the Commentary to Article 24 of the OECD Model.
[435] See para. 17 of the Commentary to Article 24 (1) of the OECD Model.
[436] See John F. Avery Jones et al, The Non-discrimination Article in Tax Treaties", *European Taxation* 10 IBFD (1991), p. 335 and Pietro Adonino, IFA General Report "Non-discrimination in International Tax Law", *Cahiers du Droit Fiscal International*, Vol. 78b, (1993), p. 48
[437] Further situations are analysed below in the context of tax groups.
[438] See paras. 20 and 21 of the Commentary to Art. 24 of the OECD MTC.

> in which it has been incorporated. The domestic tax law of State A provides that dividends paid to a company incorporated in that country by another company incorporated in that country are exempt from tax. Paragraph 1 does not extend that treatment to dividends paid to a company incorporated in State B. Even if a company incorporated in State A and a company incorporated in State B that receive such dividends are treated differently, these companies are not in the same circumstances with regards to their residence and residence is a relevant factor in this case […]

8.5.1.3 Discriminatory treatment: other or more burdensome taxation and connected requirements

The discriminatory treatment which is tackled by Article 24 (1) refers to other or more burdensome taxation and connected requirements. The exact scope of this provision is far from clear. According to its wording, the discriminatory treatment may occur in one of the following situations: (i) more burdensome taxation; (ii) other (unfavourable) taxation; (iii) requirements connected with taxation. The use of the preposition "or" clearly suggests an alternative formulation: the rule prohibits any of the three situations referred to.

The first one – *more burdensome taxation* - refers to a comparison of tax burdens, that is, the quantum of tax.[439] In that regard the condition of more burdensome taxation will be fulfilled in the case a greater tax burden exists.

The second situation – *other taxation* - is the most unclear. A literal reading would seem to imply that this expression would be limited to reference to other taxes, different from the ones imposed to nationals of a certain State. A different view considers that expression to have the meaning of less favourable taxation arising from a broader tax base[440] (due to restrictions in deductibility of expenses, disallowances of personal exemptions, etc…). Thus, both other taxation and more burdensome taxation would be assessed within a single context - the amount of tax - referring to tax rate in the first case, and taxable basis in the second case.[441] Both these approaches deserve some remarks as they lead to a considerably narrow interpretation of this provision. Because by limiting other taxation other taxes restricts the application of this provision as many tax systems discriminate but not typically by leading to the application of different taxes. And by considering other taxation as meaning different tax base which would mainly restrict certain types of deductions seems meaningless as it would be covered already under the expression more burdensome taxation. In fact, disallowing a deduction would lead to a higher tax base and consequently the quantum of tax – tax burden – would be higher. In addition, this interpretation would have the further consequence of making it difficult to distinguish in practice paragraph 1

[439] See John F. Avery Jones et al, The Non-discrimination Article in Tax Treaties", *European Taxation* 10 IBFD (1991), p. 342.
[440] See Kees Van Raad, *Non-Discrimination in International Tax Law*, Kluwer Law International, The Hague (1986), p. 93.
[441] See Pietro Adonino, IFA General Report "Non-discrimination in International Tax Law", *Cahiers du Droit Fiscal International*, Vol. 78b, (1993), p. 50.

from paragraph 3 which uses the expression less favourably levied. It is clear that the wording and scope of both paragraphs is different and that the intention was to provide a wider application to Article 24 (1).

Therefore, following a different - broader - approach is to consider that *other taxation* leads to the application of the non-discrimination clause as long as the taxation of a company national of one Contracting State is made on a legal basis different[442] from the one used if the company is a national of the other Contracting State. In such case, the discriminatory treatment derives from the fact that a company may not benefit from certain tax rules (being therefore subject to taxation on a different "legal basis") that would otherwise apply in the case such company were a national of the other Contracting State. This, irrespective of whether the non-application of such rules leads to a higher tax burden or to being subject to different taxes.[443] The discriminatory treatment derives purely from the fact that a national of a certain State is denied the application of certain tax rules that apply to nationals of the other Contracting State due precisely to its different nationality. Such denial gives rise to other treatment by generally placing the person at a disadvantage as compared with a national of the other Contracting State and that is, by itself, sufficient to trigger the non-discrimination protection of paragraph 1.[444] This understanding fits the wording of Article 24 paragraph 1 and it is in the view of the author the most appropriate one. In fact if as referred to, one of the fundamental elements for the interpretation of tax treaties provided in Article 31 (1) of the Vienna Convention of the Law of Treaties ("VCLT") is the object and purpose[445] of a treaty, given that non-discrimination is also one of the main purposes of tax treaties, the interpretation of the related provisions should be as broad as possible in order to be made in accordance with such object and purpose: avoid protectionism of nationals of a certain Contracting State.

---

[442] See Klaus Vogel, *On Double Taxation Conventions: a Commentary to the OECD-, UN- and US Model Conventions for the Avoidance of Double Taxation of Income and Capital with particular reference to German Treaty Practice* (Kluwer 3rd edition 1997), p. 1294 or John F. Avery Jones et al. "Art. 24 (5) of the OECD Model in Relation to Intra-Group Transfers of Assets and Profits and Losses", 3 *World Tax Journal* 2 (2011), p. 190.

[443] This understanding is actually supported by the history of this provision and the reports of the Workings Parties of the OEEC. In an interpretative note the Working Party clarified that:

> "The words …'shall not be subjected to any taxation or any connected requirement connected therewith which is other or more burdensome…' mean that tax may not be in any other form (no different taks, no different mode of computing the taxable amount, no different rate, etc.) and that formalities connected with taxation (returns, payment, prescribed times, etc.) may not be more onerous)."

See OEEC Working Party 4, FC/WP4(57(2), 10 May 1957.

[444] See concurrently, Rust, in Vogel & Lehner, *Doppelbesteurerungsabkommen*, 5th edition, (Munich: Verlag C.H. Beck 2008), Art. 24, marginal note 42, who argues that it is not necessary that the different tax treatment actually leads to higher taxation.

[445] See, among others, K. Vogel and R. Prokisch, IFA General Report "Interpretation of Double Tax Conventions", *Cahiers de Droit Fiscal International* Vol. 78a, (1993), p. 72 and F. Engelen, *Interpretation of Tax Treaties under International Law: A study of Articles 31, 32 and 33 of the Vienna Convention on the Law of Treaties and their application to tax treaties*, IBFD Doctoral series no. 7, (2004), p. 166.

Lastly, the third relates to *connected requirements.* This expression refers to formalities related with taxation (returns, payments, prescribed times, etc.)[446] which suggests that it relates to actions that the taxpayer is required to perform.[447] The condition does not refer to the taxation as such,[448] but rather to all other obligations which may be required in order to make the tax levy concretely possible.

An example as regards the interpretation of this clause can be illustrated by the decision in the *Commerzbank* case. The case[449] involved a German bank ("the taxpayer") which was trading in the UK through a branch. During the course of its banking business this branch made loans to US corporations and received interest on those loans. The sums received by way of interest were included in the branch profits and paid UK corporate tax. Under the DTT UK/US, interest paid by a US company was exempt from UK income tax unless the recipient of the interest was a UK resident or national. The taxpayer successfully claimed for the recovery of the previously paid tax based on the fact that it was not considered a UK resident for treaty purposes. It further claimed the payment of interest on the tax wrongfully paid. That repayment supplement was denied by the UK Revenue on the basis that the eligibility for such payment depended on the bank being resident in the UK. The taxpayer appealed this decision considering that the residence requirement constituted a violation of the breach of tax treaty non-discrimination provisions or the freedom of establishment under EU Law. at exclusively to the tax treaty arguments, the taxpayer claimed that the residence requirement was in breach either of the nationality or the PE non-discrimination clauses.

Under the first claim, the purpose was to demonstrate that the refusal of the repayment supplement constituted a taxation or a requirement connected with taxation which was other or more burdensome when compared with UK nationals. As regards the *existence of a discriminatory treatment*, the UK Court agreed with the taxpayer by considering that the fact that a German national was not entitled to such repayment constituted a more burdensome requirement as regards the payment of tax. It seems correct that the taxation itself was not more burdensome as there was no impact on the quantum of tax. But it seems

[446] See para. 15 of the Commentary to Article 24 of the OECD Model.

[447] See John F. Avery Jones, "Non-discrimination: Commerzbank - round two", *British Tax Review*, 10 (1991), pp. 407.

[448] Although a different meaning, seems to be given in case *Regina v Inland Revenue Commissioners Ex p. Commerzbank AG* [S.T.C.] 271 (QBD), 12 April 1991, published *in Common Market Law Review* 3, 633 (1991). The UK High Court considered in para. 23 of its decision that the entitlement to a repayment supplement (which linked to the amount of tax payable) was a more burdensome requirement. As contended by Avery Jones in "Non-discrimination: Commerzbank - round two", *British Tax Review*, 10 (1991), pp. 405, this implies a broader meaning to the expression *"connected requirements"*. This situation seems that it should fall under the scope of *"other taxation"* or *"more burdensome taxation"*. In fact, the refusal to pay repayment supplement by the UK Revenue it is not something that the taxpayer is required to do but rather refers to amount of tax / different taxation.

[449] See *Regina v Inland Revenue Commissioners Ex p. Commerzbank*, [1991] S.T.C. 271, 12 April 1991.

also doubtful that the non-entitlement to the interest payment was a more burdensome requirement as stated by the Court. In fact it seems that the word *requirement* means something that the taxpayer is required to do[450] as the OECD Commentary[451] refers to "*formalities connected with taxation (returns, payments, prescribed times, etc.)*."

The UK Court, however, rejected the existence of a discrimination based on nationality when testing the disadvantageous treatment with the standard of comparison. The nationality clause requires that the object of comparison is made between nationals "in the same circumstances" being residence a relevant factor. This, therefore, required comparing a German resident national with a UK branch with a hypothetical UK national also resident in Germany and similarly with a UK branch. The Court correctly concluded that they would be treated in the same manner and that there was no basis upon which to allege discrimination on the ground of nationality.

8.5.1.4 Reason for discrimination: nationality

As stated, the reason of the discriminatory treatment should be the different nationality of the taxpayers, with all the other relevant factors (normally including residence, that is, tax liability) being identical.

8.5.2 The permanent establishment clause: Article 24 (3)

Paragraph 3 of Article 24 states as follows:

> "The taxation on a permanent establishment which an enterprise of a Contracting State has in the other Contracting State shall not be less favourable levied in that other State than the taxation levied on enterprises of that other State carrying on the same activities. This provision shall not be construed as obliging a Contracting State to grant to residents of the other Contracting State any personal allowances, reliefs and reductions for taxation purposes on account of civil status or family responsibilities which it grants to its own residents."

The provision deals with unfavourable taxation of an enterprise domiciled in one Contracting State with regard to his permanent establishment in the other Contracting State. The purpose of this provision is to ensure that a State does not offer enterprises operated by residents any competitive advantage over similar enterprises of non-residents. In that regard, it requires a foreign resident to be compared with a resident of the permanent establishment country carrying on the same activities. The practical effect of this provision is relevant: many States provide for different tax treatment between income earned by permanent establishments and income received by resident enterprises. By requiring the

[450] See John F. Avery Jones, "Non-discrimination: Commerzbank – round two", *British Tax Review* 10 (1991), p. 406.
[451] See paragraph 15 of the Commentary to Article 24 (1) of the OECD MTC.

source jurisdiction to treat permanent establishments equally as compared to residents, paragraph 3 of Article 24 determines that a PE establishment is entitled to national treatment.

8.5.2.1 Relevance of Article 7

Article 7 of the OECD Model is the key provision which prescribes the rules to attribute profits to permanent establishments, through which an enterprise of one Contracting State has in the other Contracting State.

Article 7 also causes impact when dealing with the non-discrimination clause of paragraph 3 of Article 24. The fact is that the interpretation of Article 24 (3) should take into account as part of its context Article 7 of the OECD Model which, as previously referred to,[452] reflects the so-called AOA. Paragraph 3 of Article 24 requires a comparison between a permanent establishment and a resident enterprise. According to the wording of paragraph 2 of this provision, for the purposes of attribution of profits a permanent establishment should be treated as a separate enterprise. Therefore, both provisions interact: by providing that a PE should be treated as an independent and separate enterprise, Article 7 somewhat enhances the comparability to be made under Article 24 (3) between a PE and a resident enterprise. In other words, the more Article 7 deems the PE an independent and separate enterprise, the more the criterion for comparability between an PE and a subsidiary will be met.

The interaction between the two provisions is stated clearly in the commentary to Article 24 (3)[453] which states that:

> "The paragraph must be read in context of the Convention and, in particular, of paragraph 2 of Article 7 which provides that the profits attributable to the permanent establishment are those that a separate and independent enterprise engaged in the same or similar activities under the same or similar conditions would have been expected to make.[…]"
>
> "[…]the application of the arm's length standard to the determination of the profits attributable to a permanent establishment is mandated by paragraph 2 of Article 7 and that paragraph forms part of the context in which paragraph 3 of Article 24 must be read;[…]"

In what specifically refers to group taxation, the relevance of Article 7 can found in the OECD draft report on non-discrimination[454] which states that:

---

[452] See *supra* 7.3.

[453] Correspondingly, also in paragraph 34 of the Commentary to Article 7 (2) one finds references to the non-discrimination clause of paragraph 3 of Article 24.

[454] See para. 9 of the OECD *discussion draft on the application and interpretation of Article 24 (non-discrimination)* of 3 November 2007.

> "[…] BIAC pointed out that the use of group (consolidated) taxation concepts have substantially expanded around the world and that in the light of the current work within the OECD on attribution of profits to a permanent establishment, under to so-called "authorised OECD approach" treating a permanent establishment as a separate enterprise if would follow that a host country permanent establishment should be permitted to join with other affiliated host country entities whatever group relief is available in the host country. " (underscore BdS)

Article 7 of the OECD MTC, therefore, establishes the framework within which the non-discrimination rule of Article 24 (3) must be applied.

As previously analysed, the adoption of the AOA strengthens the independence of the PE and in that sense, it may be said to represent a step forward when treating a PE as a subsidiary. In that sense, it can be argued that, given that under Article 7 a PE must be treated in as much as possible as a subsidiary, then for the purposes of group taxation regimes, a domestic PE should also be treated as a domestic subsidiary for the purposes of being allowed to elect to be part of group and enjoy its full benefits. It should be stressed that the OECD recognizes that the application of the AOA does not allow achieving total equality of outcome between subsidiaries and PE as the legal requirements imposed on subsidiaries which do not relate to people's functions are not deemed to be applied to a PE. In other words, the AOA does not require to deem legal requirements that apply to subsidiaries and not to permanent establishments (and that have nothing to do with people's functions) to be applied to permanent establishments.[455] It is clear, however, that the adoption of the AOA allows remunerating more dealings at arm's length that the previous approach followed up to the 2008 version of the OECD MTC and Commentary.[456] In that regard, it allows a step forward in deeming a PE a subsidiary. This is also the case as concerns the mechanism adopted for solving cases of double taxation provided in paragraph 3 of Article 7 which resembles the solutions of Article 9 (2) between associated enterprises.[457]

---

[455] See Irene J.J. Burgers, "The New OECD Approach on Profit Allocation: A Step Forward Towards Neutral Treatment of Permanent Establishments and Subsidiaries", 10 *Florida Tax Review* 1 (2009), pp. 73-74.

[456] In fact, regarding the attribution of profits to a PE, most of the critics[456] relied on the exceptions to the arm's length principle that were contained in the Commentary to the 2008 version of the OECD MTC, in particular, paras. 27 to 43 of the Commentary to Article 7 (3) of the 2008 OECD MTC. When addressing specific kinds of dealings between the PE and the enterprise of which it is a part, the Commentary either referred that only actual cost (i.e. without mark-up) should be recognized at the PE (in the cases of temporary transfer of assets, intangibles, generally regarding services and good management), or by banning deductions in case of transfer of funds. For an overview see, Raffaele Russo, "Historical Development of Art. 7 of the OECD Model", in Raffaele Russo (ed.), *"The Attribution of Profits to Permanent Establishments – The taxation of intra-company dealings"*, (IBFD) 2005, pp. 15-19.

[457] The wording of paragraph 3 of Article 7 introduced in the 2010 version of the OECD MTC aims at dealing with possible cases of double taxation which are not solved under paragraph 2. If a taxpayer has determined the profits attributable to the PE in the same manner in each of the Contracting States and in accordance with the arm's length principle, no adjustment should be made and in that regard double taxation should be solved under the general rules of Article 23. However, if that is not the case and adjustment is made because profit attribution was not determined on an arm's length basis pursuant paragraph 2, then paragraph 3 applies to the extent that it is necessary to eliminate the double taxation of profits that result from the adjustment. Also here

A reference should be made to the fact that Article 7 (2) does not pre-empt Article 24 (3).[458] Article 7 (2) cannot be interpreted as also providing an equal treatment of permanent establishments with resident enterprises. As analysed, Article 7 (2) is a rule on attribution of income whereas the aim of Article 24 (3) is to grant protection to the entrepreneur that income attribution to the PE will not be taxed less favourably than resident enterprises. Therefore, both provisions, although interrelated, have different scopes.

8.5.2.2 Requirements for the application of Article 24 (3)

According to this paragraph, the existence of a discriminatory situation will occur under the following circumstances: (a) there is a permanent establishment of an enterprise of one Contracting State (the subject of non discrimination), which is (b) subject to less favourable tax treatment (discriminatory treatment) (c) when compared to enterprises of the other Contracting State carrying on the same activities (object of comparison), due to (d) the fact that the activities are carried on by a permanent establishment (reason for discrimination).

8.5.2.2.1 Subject of non-discrimination: permanent establishment of an enterprise of one Contracting State

The subject protected under this paragraph is a non-resident enterprise of one State which carries on the activity in the other State through a PE situated there. Therefore, when an enterprise within the meaning of Article 7 OECD MTC exists[459] and which has a PE pursuant to Article 5 OECD MTC, this non-discrimination clause of paragraph 3 is potentially applicable. The term enterprise[460] is defined in Article 3 (1) (c) as applying to the carrying on of any business and it is linked to Article 3 (1) (h) which defines business as including the performance of professional services and of other activities of an independent character.

8.5.2.2.2 Discriminatory treatment: Less favourable tax treatment

Paragraph 3 of Article 24 OECD MTC provides protection against discriminatory treatment for cases in which the taxation is *less favourably levied* on a PE than on a resident

---

it is possible to make resemblances with situations involving two different companies: paragraph 3 is based on the corresponding adjustment mechanism of paragraph 2 of Article 9 applicable for transfer pricing adjustments involving two related companies.

[458] See Kees Van Raad, "*Non-Discrimination in International Tax Law*", Kluwer Law International, The Hague (1986), pp. 138-139.

[459] Similarly see Michael Lang, "The term "enterprise" and Article 24 of the OECD Model Convention" in G. Maisto (ed.) *The Meaning of "Enterprise", "Business" and "Business Profits" under Tax Treaties and EU Tax Law*, EC and International Tax Law Series, Vol. 7 IBFD (2011), p. 112, who concludes that the term enterprise under Art. 24 should be understood as in the distributive provision of Art. 7

[460] The term enterprise is particularly relevant within the context of the non-discrimination provision since paras. 3, 4 and 5 use this term. For an analysis of this term see Michael Lang, id. at 112.

company. In that regard it has a different wording when compared with both paragraphs 1 and 5 which make reference to wider discrimination arising from *other, higher or more burdensome taxation*. Connected requirements are also not mentioned in this provision.

It is interesting to examine the reason for this difference. The reports of the OEEC Fiscal Committee reveal that the permanent establishment non-discrimination provision was perceived as the most relevant provision in practice[461] with "great importance for the development of commercial and industry across the frontiers".[462] That might be the reason why the wording of paragraph 3 is narrower[463] as per comparison with paragraphs 1 or 5. Another possible explanation is to try to relate the degree of protection provided under the different non-discrimination clauses to the degree of taxing rights over the protected person: if there are no taxing rights there is no protection against non-discrimination. If there are limited taxing rights, that is, in the PE situation, there is a limited degree of protection. If there are full taxing rights, there is full protection under the non-discrimination clauses as is the case of paragraphs 1 and 5.

Therefore, traditionally the interpretation of this provision is that discriminatory treatment under paragraph 3 arises only in situations that result in more burdensome taxation of PEs – payment of more tax - either as a consequence of a different tax base or tax rate.[464] This interpretation can once again be illustrated by the decision in the *Commerzbank* case.[465] The taxpayer claimed discriminatory treatment based not only on nationality but also on the PE non-discrimination clause as the taxpayer considered that the lack of repayment supplement constituted taxation less favourably levied. The UK Court rejected this argument by referring to the narrower scope of this clause as although the repayment supplement was connected with the levy of taxation, it did not affect the amount of that levy. It seems that here, the Court followed a strict reading of less favourable levy as

[461] See John F. Avery Jones, "Understanding the OECD Model Tax Convention: The Lesson of History", 10 *Florida Tax Review* 1 (2009), p. 36, or Klaus Vogel, *On Double Taxation Conventions: a Commentary to the OECD-, UN- and US Model Conventions for the Avoidance of Double Taxation of Income and Capital with particular reference to German Treaty Practice* (Kluwer 3rd edition 1997), p. 1316. See also John F. Avery Jones, et al., "The Non-discrimination Article in Tax Treaties", *European Taxation* 10 IBFD (1991), p. 338 who acknowledge the fact that most of the OECD Commentary regarding the non-discrimination in tax treaties refers to the PE clause suggesting the practical difficulties arising from it.
[462] See paragraph 6 of FC/WP4(57) 2, of 10 May 1957.
[463] See however Philip Baker, *Double Taxation Conventions*, Sweet & Maxwell (loose-leaf edition), p. 24-2/11 who considers that arguments based on objective differences are not valid concluding that para. 3 may end up being wider in practice than paras. 1 or 5.
[464] See John F. Avery Jones, et al., "The Non-Discrimination Article in Tax Treaties-II", *British Tax Review* (1991), pp. 425-426. These authors refer that less favourably has the same meaning than more burdensome taxation in the nationality provision in the sense of quantum of tax. However, while suggesting this interpretation they recognize that if that is the correct interpretation then presumably the wording of paragraph 3 would be different and both paragraphs 1 and paragraph 3 would use the same wording.
[465] See *Regina v Inland Revenue Commissioners Ex p. Commerzbank*, [1991] S.T.C. 271, 12 April 1991.

meaning only the imposition of more tax. An interesting argument that has been made[466] is that if one considers that the payment of interest by non-residents - which would not otherwise be due by residents - would clearly fall within the scope of the PE non-discrimination clause, the reverse scenario of absence of interest on a tax repayment could arguably also be within the scope of such clause.

The Commentary sets out that:[467]

> It appears necessary first to make it clear that the wording of the first sentence of paragraph 3 must be interpreted in the sense that it does not constitute discrimination to tax non-resident persons differently, for practical reasons, from resident persons, as long as this does not result in more burdensome taxation for the former than for the latter. In the negative form in which the provision concerned has been framed, it is the result alone which counts, it being permissible to adapt the mode of taxation to the particular circumstances in which the taxation is levied.[…]

This may be due to the fact that:[468]

> The main reason for difficulty seems to reside in the actual nature of the permanent establishment, which is not a separate legal entity but only a part of an enterprise that has its head office in another State. The situation of the permanent establishment is different from that of a domestic enterprise, which constitutes a single entity all of whose activities, with their fiscal implications, can be fully brought within the purview of the State where it has its head office.

The Commentary acknowledges the difference in wording between paragraph 3 and paragraphs 1 and 5 relying on the difference between a PE not being a separate legal entity from its head office. Therefore, it concludes that it is possible to tax PEs differently when that is justified by practical reasons between taxing a resident and a non-resident (PE). As referred, traditionally this has been considered as meaning that the provision tackles situations which involve a higher tax burden of the PE itself. Conversely, if the PE is not granted a direct benefit which materialises in a reduction of the tax burden, then paragraph 3 is simply not applicable. This interpretation has obvious consequences regarding group taxation and the claim of discriminatory treatment under paragraph 3 as is described in more detail below. Ultimately, it reflects the impossibility to claim PE discriminatory treatment where joining the tax group would not result in the PE being subject to less favourable taxation that is, no taxes being due without inclusion in the tax group.

This approach may be considered to narrow. An alternative interpretation might be that paragraph 3 does not comprise other taxation or connected requirements when they are inherent to the differences between a PE and a subsidiary. The starting principle for the interpretation of paragraph 3 is that this provisions aims at ending discriminatory treatment

[466] See John F. Avery Jones, "Non-discrimination: Commerzbank – round two", *British Tax Review* 10 (1991), p. 406.
[467] See paragraph 34 of the Commentary to Article 24 of the OECD MTC.
[468] See paragraph 39 of the Commentary to Article 24 of the OECD MTC.

of PEs. To fill its purpose such interpretation should comprise all elements of a discriminatory treatment except those who, by nature, differentiate PEs from subsidiaries. Following this interpretation it means that the term taxation in paragraph 3 should be understood in the same terms as paragraph 1 in order to include all the elements of the domestic tax system.[469] Therefore, PEs should benefit from all the tax rules as they are applicable to resident companies except those who, for practical reasons connected with the different nature of the PE and a resident subsidiary cannot be extended to PEs. Ultimately this means that it is not relevant that the PE itself is not subject to unfavourable tax treatment. A PE should benefit from all tax preferences that apply to a resident company.[470] Therefore, comprising all elements of the national tax system is not limited to merely the amount of tax but everything that is related with the taxation of the PE.

8.5.2.2.3 Object of comparison: enterprises of the other Contracting State carrying on the same activities

The determination of whether there is discrimination requires a hypothetical comparison between the PE and a resident company engaged in the same activities and located in the same State in which the PE is situated. This is perfectly illustrated in the UK case, *UBS AG*[471] which involved a bank resident in Switzerland conducting business as a market maker in the London Stock Exchange through a local branch. Very clearly it was observed that:

> "[…] the treaty requires one to compare the taxation of the appellant's permanent establishment in the UK with a UK resident company carrying on the same activities to determine whether the taxation is less favourably levied on the permanent establishment. The issue depends on identifying the exact comparator. The same activities requirement means that the hypothetical UK resident company is a market maker […]".

The comparison must be based on the notional assumption that the PE is placed on equal footing for tax purposes with a legally independent enterprise of the State in which the PE is located.[472] This is also clear in the decision of the Portuguese Arbitration Court[473]

---

[469] See Kees Van Raad, "*Non-Discrimination in International Tax Law*", Kluwer Law International, The Hague (1986), p. 142 or Niels Bammens, *The Principle of Non-Discrimination in International and European Tax Law*, IBFD Doctoral Series no. 24 (2012), p. 235.

[470] Similarly see Raul-Angelo Papotti, "Treaty Non-Discrimination Clauses in Group Consolidation Situations", 31 *Intertax* 10, Kluwer Law International (2003), p. 326.

[471] See, *inter alia,* the decision of the Special Commissioners in case *UBS AG v Revenue and Customs Commissioners*, 7 June 2005, 7 *ITLR*, pp. 893-926, para. 12 (later confirmed by UK Court of Appeal (2007) EWCA Civ 119, 9 *ITLR*, pp. 767-798). Similarly, the decisions of the Indian Income Tax Appellate Tribunal in cases *Mechtem Canada Inc. v Deputy Commissioner of Income Tax*, 2006 100 ITD 251 Mum, 30 September 2005 or *Shri Rajjev Sureshba Gajwani, v Assistan Commissioner of Income Tax*, ITA no. 3111/Ahd/2007, 4 March 2011.

[472] Klaus Vogel, *On Double Taxation Conventions: a Commentary to the OECD-, UN- and US Model Conventions for the Avoidance of Double Taxation of Income and Capital with particular reference to German Treaty Practice* (Kluwer 3rd edition 1997), p. 1314.

concerning the application of the DTA concluded between Portugal and Brazil. The case involved a Brazilian company with a Portuguese PE. The company had participations in Portuguese resident companies which were effectively allocated to the PE located in Portugal. Under the applicable rules, in the case of participations held by Portuguese resident companies in Portuguese subsidiaries there was a deduction of 50% of the dividends received as a mechanism to relieve economic double taxation. In the case of participations allocated to domestic PEs, the regime was not applicable as they were not Portuguese resident companies. The taxpayer claimed that such difference in treatment breached paragraph 2 of Article 24 of the DTA Portugal/Brazil (virtually identical to paragraph 3 of the OECD MTC). The Court concluded that the non-application of this economic double taxation relief mechanism amounted to a breach of the PE non-discrimination clause as it provided a difference in treatment between resident Portuguese companies and PEs.

The wording of paragraph 3 refers to a requirement of *same activities* and not to *same circumstances* as in paragraph 1. The most likely explanation to this difference in wording is that contrary to paragraph 1 there is no requirement of full tax liability since that is the fundamental difference between resident companies and PEs.[474] In other words, for the purposes of ascertaining similarity of situations and differently from paragraph 1, residence is naturally not a requirement as the structure of the OECD MTC itself lies in the difference between source taxation (PE) and worldwide taxation (residence).

The Commentary makes reference to a comparison standard by considering that the purpose of this provision is to:[475]

> […] end all discrimination in the treatment of permanent establishments as compared with resident enterprises belonging to the same sector of activities, as regards taxes based on business activities, and especially taxes on business profits.

---

[473] Case 154/2013-T of 26 November 2013. For a summary of this case see also, Joao Felix Pinto Nogueira, "Portugal: PE and Non-Discrimination Regarding Domestic Relief for Double Economic Taxation", in M. Lang et al. *Tax Treaty Case Law around the Globe* 2014, IBFD online (2014).

[474] Differently, the decision adopted by the Income Tax Appellate Tribunal in India in the case *Automated Securities Clearance Inc v Income Tax Officer* (ITA No. 1758/PN/2004) of 10 September 2008, 11 *ITLR*, pp. 201-235. The case involved a US company with a PE in India that was denied a tax benefit. The taxpayer invoked the application of the non-discrimination provision of the DTC India-US due to the different treatment between resident companies and foreign companies acting in India through a PE. The Court concluded that the differentiation provided by Indian legislation based on residential status could not be considered to be discriminatory. It is submitted that the Court decided erroneously in this case. A justification for the different treatment of companies and PEs based on the status of residence is to withdraw paragraph 3 of the whole meaning, which is to target discriminatory treatment between those two different entities. The comparability test necessarily involves a similarity of factors except the one that inherently differentiates between PEs and companies, and that is residence. Concurring, see also the editor's note to this case by Philip Baker in 11 *ITLR*, p. 203.

[475] See para. 35 of the Commentary to Art. 24 of the OECD MTC.

And adds that[476]:

> […] regulated and unregulated activities would generally not constitute the "same activities" for the purposes of paragraph 3. Thus, for instance, paragraph 3 would not require that the taxation on a permanent establishment whose activities include the borrowing and lending of money but which is not registered as a bank be not less favourably levied than that of domestic banks since the permanent establishment does not carry on the same activities. Another example would be that of activities carried on by a State or its public bodies, which, since they are controlled by the State, could not be considered, for the purposes of paragraph 3, to be similar to activities that an enterprise of the other State performs through a permanent establishment.

The question is, of course, whether the comparator in paragraph 3 is indeed activity based. Arguments have been made[477] that the reference in paragraph 3 to *same activities* corresponds with an implied test of *same circumstances*. Otherwise this could lead to a situation that if domestic rules would discriminate not based on the activities but on another basis (e.g. the structure of the assets as in the case of special regimes for investment companies), the situation would not be protected by the scope of this provision, a situation which was certainly not intended. The opposite understanding[478] is that the reference to *same activities* being different from *same circumstances* indeed implies that the comparison is made based on the object of the activities carried out by the PE.

In my view, the relevant point should be that the purpose of this provision is to protect non-resident taxpayers in the PE State. Therefore, the comparison should be made taking into account all the relevant characteristics except the relevant criterion protected under paragraph 3. The activities of the PE may or may not be relevant for this comparison depending on the domestic tax measure at stake. In other words, the activities carried out by the PE are a factor for the comparison when they are relevant for the taxation of the PE.[479] That is precisely what can be inferred from the Commentary that implies different taxation under domestic laws based on the nature of the activity.

The same reasoning applies as regards whether the form of ownership is a relevant issue to be assessed. The Commentary states that:[480]

> "It is also clear that, for purposes of paragraph 3, the tax treatment in one Contracting State of the permanent establishment of an enterprise of the other Contracting State should be compared to that of an enterprise of the first-mentioned State that has a legal structure that is similar to that of the enterprise to which the permanent establishment belongs. Thus, for

[476] See para. 37 of the Commentary to Art. 24 of the OECD MTC.

[477] See Kees Van Raad, "*Non-Discrimination in International Tax Law*", Kluwer Law International, The Hague (1986), p. 140. Similarly, see James G O'Brien, "The NonDiscrimination Article in Tax Treaties", *Law & Policy in International Business* 10 (1978), p. 569

[478] See Pietro Adonino, IFA General Report "Non-discrimination in International Tax Law", *Cahiers du Droit Fiscal International*, Vol. 78b, (1993), p. XXX.

[479] See Niels Bammens, *The Principle of Non-Discrimination in International and European Tax Law*, IBFD Doctoral Series no. 24 (2012), p. 194.

[480] See para. 37 of the Commentary to Art. 24 of the OECD MTC.

> example, paragraph 3 does not require a State to apply to the profits of the permanent establishment of an enterprise carried on by a non-resident individual the same rate of tax as is applicable to an enterprise of that State that is carried on by a resident company."

The Commentary is referring to the fact that an enterprise cannot be considered in isolation with the person (e.g. an individual or company) that carries it on. Therefore, when determining the enterprise with which to compare the PE, since this PE is only a part of the enterprise that has its head office in the other State and has no independent legal status, the comparison[481] should also consider[482] the legal set up of that enterprise.[483] But this conclusion is once again based on the fact that different (domestic) taxation applies depending on the legal structure and therefore, that becomes relevant for the object of the comparison.[484]

8.5.2.2.4 Reason for discrimination: carrying an activity through a PE in the other State

The reason for discriminatory treatment protected under paragraph 3 of Article 24 is the fact that an enterprise of a Contracting State carries an activity in the other State being subject to less favourable taxation when compared with a resident enterprise in that State.

8.5.3 The deductibility clause: Article 24 (4)

Paragraph 4 of Article 24 was added to the OECD MTC in the 1977 revision and currently states that:

> "Except where the provisions of paragraph 1 of Article 9, paragraph 6 of Article 11, of paragraph 4 of Article 12, apply, interest, royalties and other disbursements paid by an

[481] The comparison is clearly illustrated by Kees Van Raad, "*Non-Discrimination in International Tax Law"*, Kluwer Law International, The Hague (1986), p. 135 when stating that a foreign entrepreneur who resides in State "B" as individual, his tax position in State "A" in respect of the PE income must be compared with that of a resident individual of State "A" who operates a similar enterprise in State "A". And if the foreign enterprise is operated by a corporation, its tax position must be compared with that of an "A" State resident corporate taxpayer.

[482] See Klaus Vogel, *On Double Taxation Conventions: a Commentary to the OECD-, UN- and US Model Conventions for the Avoidance of Double Taxation of Income and Capital with particular reference to German Treaty Practice* (Kluwer 3rd edition 1997), p. 1315.

[483] See in this regard, the decision of the Indian Income Tax Appellate Tribunal in the case *Mashreqbank psc v Deputy Director of Income Tax*, ITA No. 2153/Mum/01, 9 *ITLR,* pp. 1062-1082, paras. 26-34.

[484] This is precisely the interpretation made by K. Vogel when stating that the legal structure is a comparison factor when such structure is actually of importance for the taxation of the enterprise concerned. [484] Klaus Vogel, *On Double Taxation Conventions: a Commentary to the OECD-, UN- and US Model Conventions for the Avoidance of Double Taxation of Income and Capital with particular reference to German Treaty Practice* (Kluwer 3rd edition 1997), p. 1314. An example where the legal structure is relevant is precisely within the context of tax groups, which are restricted to resident companies and excludes PEs of foreign companies. The group structure is of relevance regarding whether the PE treatment is subject to discriminatory treatment. See in this sense, Raul-Angelo Papotti, "Treaty Non-Discrimination Clauses in Group Consolidation Situations", 31 *Intertax* 10, Kluwer Law International (2003), p. 325.

> enterprise of a Contracting State to a resident of the other Contracting State shall, for the purpose of determining the taxable profits of such enterprise, be deductible under the same conditions as if they had paid to a resident of the first-mentioned State. Similarly, any debts of an enterprise of a Contracting State to a resident of the other Contracting State shall, for the purpose of determining the taxable capital of such enterprise, be deductible under the same conditions as if they had been contracted to a resident of the first-mentioned State."

The purpose of this clause is to protect enterprises of a Contracting State against less favourable tax treatment regarding payments of certain types of disbursements made to a resident of the other Contracting State. In that regard, it precludes the State of residence of the enterprise making the payments from applying its domestic rules that restrict deductibility of expenses and therefore, treats payments made to non-residents less favourably than similar payments made to residents of the same State where the paying enterprise is established. Paragraph 4 is expressly subject to the provisions of Articles 9 (1), 11 (6) and 12 (4), all of them referring to the calculation of income on an arm's length basis.

The application of paragraph 4 is dependent on the following: (a) enterprise resident of one State (the subject of non discrimination) which is subject to (b) limitations on the deductibility for the purposes of determining its taxable profits (discriminatory treatment) with the (c) exception (to the discriminatory treatment) to payments which are not arm's length; when compared to (d) enterprises (object of comparison) of that other State, due to (e) (reason for discrimination) payments made to residents of that other State.

8.5.3.1 Subject of non-discrimination: enterprise resident of one State

The subject of discriminatory treatment is the enterprise of one Contracting State that makes payments to an enterprise resident in other Contracting State and is precluded (totally or partially) from deducting payments of interest, royalties and other disbursements.

8.5.3.2 Discriminatory treatment: limitations on the deductibility for the purposes of determining its taxable profits

The condition set forth under this clause is that the payments made to an enterprise resident in a Contracting State to a resident of the other Contracting State must be deductible under the same conditions as if they had been paid to a resident of the State of the paying enterprise. The expression *same conditions*[485] implies that the requisites for the payments

[485] In this regard van Raad argues that the requirement of same conditions, similar to the same circumstances in para. 1 of Art. 24 is redundant as it is already inherent in the comparability test that all the conditions are the same except the circumstance or reason for the discriminatory treatment: the fact that the payments are made to a resident of the other State. See Kees Van Raad, "*Non-Discrimination in International Tax Law*", Kluwer Law International, The Hague (1986), p. 176.

made to non-residents should be entirely identical to the ones made to residents, except that the person paying those sums is not a resident of the same State in which the payment is made. Since paragraph 4 calls for a deduction under the same conditions had the payments been made to (the same) residence State of the payer the requirement to remove discriminatory treatment does not look for a comparison in the tax burden between subject and object of comparison but rather to the conditions in which such the deductibility is allowed when determining the taxable base of the taxpayer.[486]

8.5.3.3 Exception to the discriminatory treatment: payments which are not at arm's length

The exclusion of the first of paragraph 4 means that even if the disallowance of deduction operates exclusively in relation to payments made to non-residents, it will still not infringe Article 24 as long as the conditions of Article 9 (1), Article 11 (6) and Article 12 (4) are respected. These three articles provides for rules on profits adjustment when there is a special relationship between the payer and the receiver, that is, if they are associated enterprises. Article 9 allows States to adjust the profits of an enterprise whenever such enterprise has entered into transactions with an associated enterprise under non-arm's

---

Differently, Bammens makes reference to the fact that the paragraph 4, contrary to the remaining clauses in Article 24 does not provide for a standard of comparison (such as *same circumstances* in paragraphs 1 and 2, *same activities* in paragraph 3 or *similar enterprises* in paragraph 5). Thus, contrary to the remaining clauses of Article 24, there is no express reference to a comparability standard except the reference to deduction in the same conditions. In his view, this means that there is a potentially broader scope of application of paragraph 4 than the reminding clauses of Article 24 since in this case, the relevant characteristics for the comparability standard are not required. See Niels Bammens, *The Principle of Non-Discrimination in International and European Tax Law*, IBFD Doctoral Series no. 24 (2012), p. 339. I tend to agree with van Raad in the sense that the expression "same conditions" in this clause is identical to the same circumstances or similar enterprises plays an identical role as the work as a standard of comparison for the purposes of the comparability test, although I acknowledge that the wording across all these clauses should preferably be harmonized, such to avoid interpretation issues. See Kees Van Raad, "*Non-Discrimination in International Tax Law"*, Kluwer Law International, The Hague (1986), p. 176.

[486] This may concern, for instance, any different timing for deductions depending on whether payments are made to residents or non-residents. Another issue concerns additional information requirements. The 2008 amendments to the OECD MTC added the reference currently in para. 75 of the Commentary to Art. 24 (4) that this paragraph "does not prohibit information requirement with respect to payments made to non-residents since these requirements are intended to ensure similar levels of compliance and verification in case of payments to residents and non-residents". The question is how this statement complies with the same conditions requirement in the text of paragraph 4. The Commentary seems to assume the position that these additional information requirements are due to the fact that access to information is harder to obtain in the case of non-residents. However, the fact is that the difficulties in accessing or obtaining information from non-residents which is intrinsically related precisely to their being non-residents and therefore one can wonder if this is actually something to be considered for comparison purposes or actually constitutes a justification ground which, being that the case, cannot be accepted due to the absolute nature of the discrimination provision. See similarly, Brian J. Arnold, "Tax Treaty Case Law News", *Bulletin for International Taxation* 1 IBFD 2015, p. 57 or Niels Bammens, "Article 24 (4) and 24 (5) of the OECD Model Applied to Domestic Thin Capitalization Rules", *World Tax Journal* 6 (2013), p. 159, who considers that nothing in the text of paragraph 4 indicates that additional information requirements do not fall under the prohibited discrimination protected by such clause.

length conditions. In turn, Articles 11 (6) and 12 (4) refer to the amount of interest and royalties, which are not in accordance with the arm's length principle. The exception in the opening of paragraph 4 to allow a State to deny a deduction based on the arm's length principle even if such denial is discriminatory in the sense that such requirement applies only to cross-border payments and is aimed at preventing the erosion of tax base deriving from deductible payments made to non-residents.

Although both Articles 9 (1) and Article 24 (4) can potentially address scenarios of interest deduction limitations still, in principle, they do not apply cumulatively but rather alternatively considering the carve-out in the opening of paragraph 4. The issue is then to determine what the situations are in which either Article 9 (1) or Article 24 (4) apply.

The starting point is to determine the scope of Article 9 (1). This provision requires that the conditions agreed between associated companies of multinational enterprises in their commercial or financial relations should be similar to those conditions which would be agreed between independent parties. In that regard it provides for adjustments to profits which are calculated based on the arm's length standard. The purpose of Article 9 is to ensure the allocation of the proper amount of income to the respective jurisdiction. Therefore, there are three essential characteristics in Article 9 (1): (i) it in a rule on allocation of income; (ii) addresses transactions between associated enterprises and (iii) performs an arm's length adjustments. This means that Article 9 (1) will apply to situations of payments between associated companies in which the applicable domestic rules disallow a deduction based on arm's length adjustment. An example will be the application of certain thin capitalization provisions. In addition, also domestic rules which used fixed ratios are within the scope of (and in accordance with) Article 9 (1) if they shift the burden of proof to the taxpayer to demonstrate that the transaction was carried on an arm's length basis.[487] Differently, situations which will fall outside the scope of Article 9 (1) will relate first of all to rules that are not limited to apply to situations between two associated enterprises either because they also involve deduction limitations in case of payments made to third parties[488] or because those payments are made to a non-resident party which does not carry on an enterprise. Additionally, rules that correspond to tax base computation (e.g. earning stripping rules) and that are not rules on allocation of income will also fall outside the scope of Article 9 (1). Ultimately, a concrete analysis involves determining the

[487] See OECD *Thin Capitalization Report* (1986), para. 79, in OECD *Model Tax Convention on Income and Capital 2010: Full Version* (OECD Publishing 2012).

[488] Although they can fall within the scope of Article 11 (6) or 12 (4) as long as the adjustments are arm's length. The wording of these two clauses, contrary to Article 9 (1) does not imply between associated enterprises but between resident of one Contracting State and beneficial owner in the other Contracting State. See similarly, Otto Marres, "Interest Deduction Limitations: when to apply Articles 9 and 24 (4) of the OECD Model Convention?" in D. Weber (ed.) *Non-discrimination in tax treaties: selected issues from a global perspective* IBFD, Amsterdam (forthcoming).

purpose[489] of the domestic rules at stake. If they are aimed at adjusting profits to the arm's length amount between related companies, they fall within the scope of Article 9 (1). Otherwise if, for instance, they apply to third parties or they can be characterized as tax computation rules (such as the EBITDA rules) they are not subject to scrutiny under Article 9 (1).

The next step is then to proceed with the analysis of the scope of Article 24 (4). The OECD position[490] on this matter is to consider that when rules disallowing deductions do not respect the arm's length principle and refer only to payments made to non-residents, such rules will be subject to the application of Article 24 (4). This interpretation is not convincing. In practice it means that both Articles 9 (or 11 (6) or 12 (5)) and 24 (4) overlap in their scope of application as regards deduction limitation rules which do not conform with the arm's length principle: under Article 9 because the rule does not make an adjustment in accordance with paragraph 1, and Article 24 because the exception of Article 9 does not apply and therefore does not preclude the application of the non-discrimination clause of paragraph 4. While the alternative application of two treaty articles is not in itself problematic, the fact is that the wording of Article 24 (4) seems to point to a different interpretation. If the underlying concept is that paragraph 4 is applicable when Article 9 does not apply, the fact is that if the subjective scope of Article 9 (1) is met – the existence of transactions between associated enterprises – then this rule is applicable, meaning that if the adjustment is not at arm's length it breaches this provision. That being the case and interpreting the term *apply* at the beginning of paragraph 4 of Article 24 as referring to situations covered by Articles 9 (1), 11 (6) or 12 (5), then Article 24 (4) is not applicable to those situations.[491] This appears to be a much more sensible interpretation of these provisions.[492] This means that the scope of Article 24 (4) would be to be applicable to situations that are outside the scope of Articles 9, 11 (6) or 12 (5).

---

[489] See Otto Marres, "Interest Deduction Limitations: when to apply Articles 9 and 24 (4) of the OECD Model Convention?" in D. Weber (ed.) *Non-discrimination in tax treaties: selected issues from a global perspective* IBFD, Amsterdam (forthcoming).

[490] See paragraph 74 of the Commentary to paragraph 4 of Article 24 of OECD MTC.

[491] Concurrently, see Otto Marres, "Interest Deduction Limitations: when to apply Articles 9 and 24 (4) of the OECD Model Convention?" in D. Weber (ed.) *Non-discrimination in tax treaties: selected issues from a global perspective* IBFD, Amsterdam (forthcoming). Marres proposes even to extend the carve-out considering that measures which are out of its scope but are within the arm's length principle embedded in those articles should not trigger the application of Article 24 (4). In other words, any adjustment made in conformity with the arm's length standard irrespective of falling within the scope of Articles 9 (1), 11 (6) or 12 (5) could be accepted even if applied only to non-residents. I disagree with his view since (as recognized by Marres himself), the carve-out in Article 24 (4) is an exception to the general rule of applying this provision and therefore, should be subject to restrictive interpretation.

[492] Differently, see Niels Bammens who proposes the alternative application of either the carve out articles or Article 24 (4). In those cases, this means that the taxpayer can challenge the application of the rule based either in one or the other provisions. See Niels Bammens, "Article 24 (4) and 24 (5) of the OECD Model Applied to Domestic Thin Capitalization Rules", *World Tax Journal* 6 (2013), p. 157.

8.5.3.4 Object of comparison: enterprises of the other State

Paragraph 4 looks at the residency of the lender and ensures that when there are payments to residents which are deductible, then the same payments made to non-residents should also be deductible in similar terms. Therefore, the object of comparison is a resident of a Contracting State paying interest, royalties or other disbursements to a resident of the same State.

8.5.3.5 Reason for discrimination: payments made to residents of the other State

Paragraph 4 of Article 24 applies to *interest, royalties and other disbursements*. The meaning of the expression "other disbursements" is to be understood broadly as including any payment in the nature of a consideration for goods or services received other than interest or royalties that have a bearing on the determination of the profits of the paying enterprise.

8.5.4 The foreign ownership clause: Article 24 (5)

Article 24 paragraph 5 provides for the last clause of the non-discrimination provision, commonly referred to as the "foreign ownership" or "foreign ownership" clause. It states that:

> "Enterprises of a Contracting State, the capital of which is wholly or partially owned or controlled, directly or indirectly, by one or more residents of the other Contracting State, shall not be subjected in the first-mentioned State to any taxation or any requirement connected therewith which is other or more burdensome than the taxation and connected requirements to which other similar enterprises of the first-mentioned State are or may be subjected."

The inclusion of a non-discrimination provision based on foreign ownership was first proposed in 1957 by the OEEC Working Party 4 by the Swiss delegation.[493] The OEEC minutes explained the reasoning as to why the delegates found the need to include such a provision although at the time, they found that its scope of application would be relatively rare:

> "It would appear that the discrimination in question arises only very rarely in the Member countries of the OEEC. The Working Party therefore considers that the Member countries will find it easy to accept the proposed provision […]
>
> Indeed it is not easy to see how the Swiss delegation's proposal can have any real significance. The proposal mainly concerns companies under foreign control, as is made clear in the Delegation's commentary. However, although it is true that the company's nationality is sometimes determined by reference to the country of origin of the capital

[493] See John F. Avery Jones, "The United Kingdom's influence on the OECD Model Tax Convention", *British Tax Review* 6, (2011), p. 676.

> invested in it and of the individuals controlling it, the effect of the Article proposed by the Working Party is that in determining a company's nationality one must look at the law governing companies. Hence, one of two things: assuming that a company established in State A is controlled by persons domiciled in another State B, then either it will derive its status as a company from the law of the latter State and possess in consequence that latter State's nationality, in which case, it should not, by virtue of the equivalent treatment clause, be subjected to treatment different from that which will be applied to a company possessing the nationality of State A; or it will possess the nationality of State A, in which case it is inconceivable that it could be subjected to discriminatory treatment as compared with other companies of State A on the ground that it is controlled by persons domiciled in State B, when, even if it derives its status from the law of State B, it ought in virtue of the equivalent treatment clause to receive the treatment ordinarily applied in State A."

The purpose of this clause, according to the OECD, is to prevent tax measures that deter foreign investment, by tackling discriminatory treatment based on the foreign residence of the controlling entity. It is intended to provide equal treatment for enterprises resident in the source/host Contracting State regardless of whether they are owned by residents of such Contracting State or of the other Contracting State. The purpose of this provision is clear from the final report of the OEEC Working party when stating that:[494]

> " […] the purpose of which [paragraph 5] is to subject enterprises situated in a given State and under foreign control to the same treatment as similar enterprises likewise established in the same State."

In a certain way, paragraph (5) represents an extension - in the sense that it mirrors - the nationality non-discrimination clause of paragraph (1) as it seeks to treat in the same way discrimination based on the governing law (nationality) of the company and this based on the residence of the shareholders.[495]. This can be seen even by the fact that the wording of the provisions the scope of which, in both cases, is to cover *other or more burdensome taxation and connected requirements*.

The application of paragraph 5 is dependent on the following requirements: (a) there must foreign-controlled enterprises (the subject of non discrimination) of residents of one State, which are (b) subject to other or more burdensome taxation and connected requirements (discriminatory treatment) when compared to (c) similar enterprises (object of comparison) of that State, due to (d) the foreign ownership or control (reason for discrimination) by residents of the other State.

[494] See OEEC Working Party, FC/WP4(58)1, 19 February 1958.
[495] See John F. Avery Jones, "Understanding the OECD Model Tax Convention: The Lesson of History", 10 *Florida Tax Review* 1 (2009), pp. 46-47.

8.5.4.1 Subject of non discrimination: foreign-controlled enterprises

As previously referred to,[496] since paragraph (5) addresses indirect discrimination situations, the subject of the non-discrimination clause is the enterprise or enterprises of residents of the Contracting State which grants the discriminatory treatment and which are owned or controlled by residents of the other Contracting State. This clause focuses on entity-level taxation – the enterprise of the source Contracting State - and does not apply to the taxation of the owners of such enterprises; thus it is not designed to provide equal treatment for foreign owners and domestic owners. Therefore. the discriminatory treatment in this provision can only be claimed by the subsidiaries which are resident in the source State. This clause should not have any application to the taxation of payments made by the subsidiary to the non-resident parent[497] as, in that case, one is no longer referring to the enterprise itself but to taxation of the foreign owners, which is outside the scope of this clause. In the case of cross-border payments, the differential treatment by the subsidiary State regarding the application of a withholding tax on the paid income is indeed based on the parent being a non-resident rather than a resident company. The provision of Article 24 (5) is restricted, however, to instances where the (resident) *subsidiary* is subject to a different treatment because it is controlled by a non-resident rather than by a resident parent company.[498] The provision does not deal with different tax treatment of the non-resident

[496] See 8.2 *supra*.

[497] See Philip Baker, "Review of Recent Treaty Cases – Natwest II, NEC and SA Andritz", *Bulletin for International Fiscal Documentation*, 5 (2004), IBFD, p. 210.

[498] The apparent wording of para. 5 of Art. 24 has led the Brazilian Supreme Court to address the withholding taxes charged on dividend distributions made by Brazilian subsidiaries to tax treaty resident parent companies. The cases involved dividends paid to Swedish parent companies. According to Brazilian domestic tax law, those distributions were subject to withholding tax whereas if the distributions were made between Brazilian resident companies a tax exemption would apply. The Double Tax Treaty concluded between Brazil and Sweden contained nationality and foreign ownership provisions modelled on the OECD MTC. In accordance, the taxpayers invoked the application of both tax treaty non-discrimination provisions considering the different treatment provided between domestic and cross-border situations. The Brazilian Supreme Court relying on the supremacy of double tax treaties over Brazilian domestic laws reasoned in favour of the taxpayers' claims confirming the existence of discriminatory treatment. In that regard it highlighted the fact that Article 24 aims at promoting international trade and favour the attraction of foreign investment. The majority of judges who voted in those decisions interpreted those non-discrimination provisions as requiring similar treatment between Brazilian and foreign shareholders considering that they were comparable irrespectively of their residence. Interestingly, the (minority) judges who provided dissenting opinions interpreted paragraph 5 of Article 24 as precluding different treatment of Brazilian subsidiaries as regards the ownership of their capital. In the case of the withholding taxes imposed, there is no discriminatory factor based on the foreign ownership of the subsidiaries but rather a differential treatment of the persons that receive dividend payments. Accordingly, they concluded that Article 24 does not preclude such different treatment as it only addresses the disadvantageous treatment of the subsidiary itself. See Recurso Especial no. 426.945 - PR (2002/0043098-0), 22 June 2004 and Recurso Especial no 602.725 - PR (2003/0195527-8), 3 August 2004. The majority views expressed by the Brazilian Supreme Court are interesting but indeed, do not correspond with a proper interpretation of the foreign ownership provision.

parent company (as compared to a resident parent).[499] Since in the case of withholding taxes[500] the different tax treatment by the subsidiary country concerns the payments made to the non-resident parent company and not the income of the resident subsidiary company itself, the non-discrimination rule of Article 24(5) does not apply[501].
Similarly, the conclusions for imputation systems as the taxation refer to the shareholders and not to the company distributing the dividends.[502] However, in the case of split rate systems in which there is a different income taxation depending on whether the profits are distributed or not it is arguable that there is a breach of paragraph 5 since in this case there is a higher tax burden at the level of the resident (distributing company).

8.5.4.2 Object of comparison: (other) similar enterprises

The question of what should be considered as "similar enterprises" is under long standing debate. Paraphrasing the question, the issue concerns what is the comparator with which the taxation of a subsidiary is to be compared? Two[503] main possibilities for this comparator have been argued:

---

[499] Similarly, the decision of the *Court Administrative d'appel de Nantes, Case 97NT01922*, Decision of 13 March 2001 in case *Denkavit International BV* rejecting the claim of the taxpayer as regards the discriminatory taxation on dividend withholding taxes paid to non-resident parent companies based on Art. 25 (5) of the Double Tax Treaty concluded between France and The Netherlands.

[500] Clearly para. 78 of the Commentary to Art. 24 of the OECD MTC states:

> "Also, because paragraph 5 is aimed at ensuring that all resident companies are treated equally regardless of who owns or control their capital and does not seek to ensure that distributions to residents and non-residents are treated in the same way (see paragraph 76 above), it follows that withholding tax obligations that are imposed on a resident company with respect to dividends paid to non-resident shareholders but not with respect to dividends paid to resident shareholders cannot be considered to violate paragraph 5. In that case, the different treatment is not dependent on the fact that the capital of the company is owned or controlled by non-residents but, rather, on the fact that dividends paid to non-residents are taxed differently."

[501] Paragraph 5 indeed addresses situations where the resident subsidiary is treated less favourably because of being controlled by a non-resident parent company rather than a resident parent company. It does not refer to the possible different treatment of the parent company itself. In the case of withholding taxes imposed on dividend distributions, it is the parent company that suffers the tax burden and consequently the different treatment, not the subsidiary. In accordance therewith, these situations are excluded from the scope of application of the foreign ownership provision. See Kees Van Raad, Intercompany Dividends and Non-Discrimination under the OECD Model, in G. Maisto (ed.) *Taxation of Intercompany Dividends under Tax Treaties and EU Law*, EC and International Tax Law Series – Vol. 8, IBFD (2012), p. 164.

[502] This is precisely the conclusion of the UK courts in case *Boake Allen Ltd. and others v. Her Majesty's Revenue and Customs*) further analysed below.

[503] See David Oliver, "Differential treatment of discrimination?", *British Tax Review* 6 (1993), pp. 435-441. Additionally, Park J in the case N*ec Semi-Conductors Limited and other test claimants and The Commissioners of Inland Revenue,* UK High Court of Justice*,* Case no. HCO100187 & Others of 24 November 2003, 6 ITLR 2004, pp. 416 et seq., (also known as *Boake Allen Ltd. and others v. Her Majesty's Revenue and Customs*), para. 27 identified two other possibilities of comparison:

(i) *"other similar enterprises* are subsidiaries of a Contracting State of other parent companies resident in the other Contracting State. Park J considered this to be "*probably the most correct grammatical reading of the paragraph* [foreign ownership clause] *but it is obviously not what is*

(i) *other similar enterprises* are subsidiaries of a Contracting State of parent companies resident in third Contracting States (other than the other Contracting State of the actual parent company under analysis).
(ii) *other similar enterprises* are subsidiaries of a Contracting State of parent companies resident in the same Contracting State of the subsidiary

The first alternative would naturally lead to a situation where (almost) no situations would be found within the scope of Article 24 (5): as the comparison was made with a parent company resident in a third State, generally no discrimination would arise since the different treatment would be due not because the owner was a non-resident company but rather because it was a resident company of a particular Contracting State. This would have the effect of turning the foreign-ownership clause into a most-favoured nation clause but with a much reduced significance in practice. Typically domestic provisions provide difference in treatment between domestic and foreign taxpayer and not between different categories of foreign taxpayers. In other words, if this would be the comparison standard it would be addressing domestic measures that would make distinctions based on different categories of foreign ownership which would render this provision almost ineffective as domestic laws usually do not provide for such kind of distinctions.

The second alternative, in my view, is the correct one[504] considering several arguments. First of all and looking at the wording of paragraph 76 of the OECD Commentary, it is observed that the aim of this provision "is to ensure equal treatment for taxpayers residing in the same State, and not to foreign capital […] to identical treatment to that applied to domestic capital." The Commentary makes clear what the relevant comparator is: if a non-resident controlled resident enterprise should not be less favourably taxed than a resident-

---

intended". It would imply that in a situation of a subsidiary in State A with a parent company in State B, the comparison to be between other subsidiaries of State A with other parent companies of State B;

(ii) there would be no *other similar enterprises* because the tax treatment of the hypothetical parent company would always be different from the actual one. Park J rejected also this approach quite understandably. To consider the tax status of the parent company would be turning the comparator into the analysis of the existence or not of a discriminatory treatment. See in this regard John F. Avery Jones, "The non-discrimination article is about discrimination – official", *British Tax Review* 4 (2007), p.350, footnote 11."

See also, on the discussion of the comparability in this case, Ronald Kalungi, "Confusion worse confounded: what Boake Allen teaches us about the (non-) incorporation and interpretation of double taxation treaties in the United Kingdom", *British Tax Review* 1 (2009), p. 139.

[504] See, among others, Klaus Vogel, *On Double Taxation Conventions: a Commentary to the OECD-, UN- and US Model Conventions for the Avoidance of Double Taxation of Income and Capital with particular reference to German Treaty Practice* (Kluwer 3rd edition 1997), p. 1331, Kees van Raad, *Non-Discrimination in International Tax Law*, Kluwer Law International, The Hague (1986), pp. 188-189, Brian J. Arnold, "Tax Treaty Monitor", *Bulletin for International Taxation* 10, IBFD (2009), p. 270 and J. David B. Oliver, "Other Similar Enterprises – NEC Semi-Conductors Ltd and others v Inland Revenue Commissioners", *British Tax Review* 2, 2004, pp. 80-83.

controlled resident enterprise, the comparison is necessarily with a pure domestic situation. If another meaning had been intended, the Commentary would have stated that the object of this paragraph was to prevent discrimination in situations where the resident enterprise was owned by residents of a particular Contracting State.[505] The examples provided in the Commentary[506] simply confirm this reasoning as the comparison therein is always made between resident and non-resident shareholders.

A further argument may be found in the purpose of this ownership provision: to prevent tax protectionism. Accordingly, the correct interpretation is that *similar enterprises* are enterprises owned by residents of the same State, as otherwise and if the reference was to enterprises owned by residents of the third State, paragraph 5 would prevent a very limited number of situations of tax protectionism.

This reasoning is also supported by an historical argument. The Fiscal Committee's[507] minutes[508] at the time of the preparation of the 1963 OECD Draft Model reveal that it was agreed that the expression "*other similar enterprises of the first-mentioned Contracting Party*" referred to enterprises not under foreign control. And more recently, the OECD discussion draft on Article 24[509] confirms such understanding when stating that the Working Group reached the conclusion that the right comparison for the purposes of paragraph 5 was a domestic enterprise owned by residents.[510] This comparator has been being used in many national court decisions dealing with non-discrimination issues under Article 24 (5). A clear example may be found in case *Société Andritz.*[511] The French company SA Andritz was the 99% subsidiary of an Austrian company and was subject to an additional tax assessment of French corporation tax due to the fact that it was thinly capitalised, pursuant to Article 212(1) of the General Tax Code. This provision provided for an exception for parent companies subject to French corporation tax (either because they had a statutory seat in France or a permanent establishment situated there). As the Austrian parent company did not satisfy those conditions, SA Andritz claimed infringement of Article 26 (3) of DTC France/Austria (materially identical to paragraph 5 Article 24 of the

---

[505] See John F. Avery Jones et al, "The Non-Discrimination Article in Tax Treaties-II", *British Tax Review* (1991), p. 439.

[506] See para. 78 of the OECD Model Commentary to Art 24.

[507] The Fiscal Committee was set up by the Council of the (at the time) OEEC and was composed of 15 working parties with delegates from the different countries. Each working party worked on a separate article of the 1963 OECD Draft reporting regularly to the Fiscal Committee. The minutes are the result of the Fiscal Committee's meetings.

[508] See FC/WP4 (58) 2, Fiscal Committee Minute of 29 March 1958, para. 7, p. 5, available at http://www.taxtreatieshistory.org

[509] See the OECD public discussion draft "*Application and Interpretation of article 24 (non-discrimination)*", dated 3 May 2007.

[510] *Idem* at paragraph 88. The Working Group, however, agreed that there was no need to clarify such issue in the Commentary as long as there was no practical reason to do so.

[511] Société Andritz Sprout Bauer, Conseil d'Etat no. 233894 (Section du Contentieux 8eme sous-section), of 30 December 2003, 6 ITLR, pp. 604-641.

OECD MTC). The *Conseil d'État* held that the French rules were contrary to the non-discrimination provision. In particular and for this analysis, it confirmed that the comparison was to be made between the French subsidiary of the Austrian parent and a French subsidiary of a French parent.

Another example[512] can be found in India with the case *Daimler Chrysler.*[513] The taxpayer was an Indian company, the majority of the shares in which were held by a German company, Daimler Benz AG. This parent company decided to merge with a US company and form another company in Germany (Daimler Chrysler AG). With the merger, all the assets were transferred including the participations of Daimler Benz AG in the Indian company. Upon such transfer, the carrying forward of the losses in this company were disallowed since the receiving company was not a stock listed company in India (only Indian companies could be so quoted). The Court found a discriminatory treatment in violation of paragraph 4 of Article 24 (identical to Article 24 (5) of the OECD MTC) of the DTC India/Germany. For that purpose it stated that:

> "for the purpose of examining whether or not there is indeed a discrimination against an Indian subsidiary of a German company, we have to compare the same with an Indian subsidiary of an Indian company".

Also the US Court of Appeal in case *UnionBanCal Corp*[514] case followed a similar comparison with a US Resident company which was a subsidiary of a UK company. In that case and in order to ascertain whether or not there was a discrimination, what was examined was the differentiation in treatment of a company which was a subsidiary of a foreign company vis-à-vis a company which was subsidiary of a domestic company.

A final argument to support the suggested comparator can also be found when analysing the Commentary to the UN Model Convention in which Article 24 (5) has identical wording to the OECD Model. As referred to therein, during the preparation of the UN Model, this issue was considered with the possibility of redrafting paragraph 5 in the way that the relevant comparison would be made with domestic enterprises owned by other non-residents.[515] The wording of the provision remained identical to the OECD Model since developed countries objected to such amendment as "it would limit the effect of the non-discrimination article to the prevention of discrimination between enterprises owned by non-residents, thus leaving the door open to discrimination against enterprises owned by non-residents as a class".[516]

---

[512] For other cases see, *inter alia*, UK High Court decision *NEC Semi-Conductors Ltd and others v Commissioners of Inland Revenue STC 489,* para. 30, US Court of Appeals judgment in *Square D Co. and Subsidiaries v. Commissioner of Internal Revenue Service*, 04-4302, 13 February 2006, 438, F3d739, 8 ITLR 4 (2006), pp. 624-635, or two judgments of the Spanish Supreme Court: *Appeal no. 871/2003* of 1 October 2009 and the *Appeal no. 5871/2006* of 17 March 2011.

[513] *DaimlerChrysler India Private* Limited v. Deputy Commissioner of Income Tax ITA no. 968/PN/03 (2009), 11 ITLR 811-858, para. 90

[514] *UnionBanCalCorp v Comr of Internal Revenue* (2002) 5 ITLR, 912, 2000-2 USTC (CCH) P50.

[515] See paras. 8 and 9 of the Commentary to Art. 24 (5) of the UN Model Convention.

[516] See para. 8 of the Commentary to Article 24 (5) of the UN Model Convention.

This also allows concluding that the comparator to be used under paragraph 5 concerns a pure domestic situation.

8.5.4.3 Discriminatory treatment: other or more burdensome taxation and connected requirements

The wording of the foreign ownership clause is in this regard identical to the nationality clause of paragraph (1). Further reference is then made to the analysis made above regarding the nationality clause[517]. Therefore, I will limit myself to outline that the discriminatory treatment of the resident enterprise which is foreign-controlled may occur in one of the following situations: (i) more burdensome taxation, that is, payment of more tax; (ii) other taxation, meaning that the taxation of an enterprise in the Contracting State held by a resident of the other Contracting State is levied on a different legal basis from the one used where the owners are resident in the same Contracting State. This interpretation also finds support in the fact that paragraph 76 of the Commentary to paragraph 5 makes reference that *the purpose of this provision is to ensure equal treatment for taxpayers residing in the same State*.
The latter situation refers to (iii) any requirements connected with taxation.

8.5.4.4 Reason for discrimination: foreign ownership or control

Considering that the subjects of the discrimination are foreign-owned enterprises, the reason for the discrimination must rely on the fact that those enterprises are owned by residents (companies in the case of tax groups) of the other Contracting State. It should be stressed, however, that control is not a necessary condition for paragraph 5 to apply (although this statement is not particularly relevant for the scope of my analysis since as demonstrated in Chapter I, a tax group always involves some sort of control). Partial ownership of the capital by a resident of the other State is, in itself, sufficient. In addition, as per the wording of paragraph 5 ownership or control can be either direct or indirect.
In analysing the reason for the discrimination, a clear distinction should be made between ownership and taxability. If the real ground for different treatment is the fact that the owner is not taxable in the same State of the enterprise, although foreign ownership is present that would not constitute a forbidden discriminatory treatment under paragraph 5 of Article 24 of the OECD MTC. Therefore, it is crucial to determine what is the material factor for the differentiation in treatment.

In that regard, a situation in which residence and not merely foreign ownership was the relevant factor due to the liability to tax of the foreign parent company is perfectly illustrated by case *NEC Semi-Conductors*.[518] The claimants were UK subsidiaries of

[517] See *supra* 8.5.1.3.
[518] N*ec Semi-Conductors Limited and other test claimants and The Commissioners of Inland Revenue,* House of the Lords [2007] UKHL 25 9 ITLR 995-1012, Court of Appeal [2006] EWCA Civ 25 8 ITLR, 819-871,

companies resident in Japan and the US. The claimants had paid advance corporation tax (ACT). If the parent companies had been resident in the UK, both parents and subsidiaries could have made a group income election pursuant the UK legislation according to which, the subsidiaries would not be required to pay ACT. The subsidiaries claimed that they were being subjected to discriminatory treatment as the impossibility to make a group income election led to more burdensome taxation. Therefore, they claimed an infringement of the foreign ownership provision of the relevant tax treaties. The House of Lords considered that there was no such infringement since the group income election necessarily involved both the subsidiary and the parent company and both had to be liable to tax in the UK. The approach followed was that paragraph 5 of Article 24 of the OECD MTC required that the real ground for the discriminatory treatment was foreign ownership and not something else. In this case, the reason was because group election was only available in the case the parent company itself was liable to pay ACT, which was not possible for a non-resident. Interestingly, this decision reversed the previous conclusions of the Court of Appeal[519] and the High Court[520] which considered that there was indeed a breach of the non-discrimination provision.

Some criticism was then made, according to which the decision of the House of the Lords would be based on a circular argument:[521] the inability of an enterprise controlled by a non-resident to join its parent company in making group income election is because the parent is not liable to pay ACT in respect to its shareholders. And the reason why it is not liable is because it is non-resident. In my view the decision is correct. It stresses the distinction between foreign ownership and residence. In this case, the different treatment was not due to the fact that the subsidiaries were foreign owned but rather because the parent company was not liable to tax in the UK. Paragraph 5 of Article 24 can only be applied if the tax status of the parent company is not relevant in the case. This interpretation arises not only from the context of the treaty itself - which is based on the fundamental difference between residence and source – but from the whole Article 24. Even if one could admit that a pure literal wording of the foreign ownership clause[522] could support the interpretation followed by the UK lower courts, the context of Article 24 itself and its heading reference to *non-discrimination*, would always require a different treatment between comparable situations

---

NEC Semi-Conductors Limited and other test claimants v The Commissioners of Inland Revenue, High Court of Justice Case no. HCO100187 of 24 November 2003, 6 ITLR 2004, pp. 416 et seq.

[519] N*ec Semi-Conductors Limited and other test claimants and The Commissioners of Inland Revenue,* UKHL 25 9 ITLR 995-1012.

[520] N*ec Semi-Conductors Limited and other test claimants and The Commissioners of Inland Revenue,* High Court of Justice Case no. HCO100187 & Others of 24 November 2003, 6 ITLR 2004, pp. 416 et seq

[521] See Brian Cleave "Boake Allen (or NEC Semi-Conductors): Non-Discrimination, Advance Corporation Tax, Tax Treaties and Free Movement", *European Taxation* 2, IBFD (2008), pp. 94-95.

[522] Probably because the only reference in Article 24 to non-discrimination is in the heading, which gives rise to considering that this provision would contain a whole set of rules, not principles. The decision in this case however seems to confirm that the clauses of Article 24 are to be interpreted in accordance with the inherent principle of non-discrimination. See, John F. Avey Jones, "The non-discrimination article is about discrimination – official" *British Tax Review* 4 (2007), p. 349.

except the circumstance protected by paragraph 5 as giving rise to the discriminatory treatment (that is, the foreign ownership of the company) which, as explained, was not the case. There was no breach of the non-discrimination foreign ownership clause because the parent company, not being a UK resident, was not liable to ACT. Therefore, the material factor for the distinction was, thus, residence (liability to tax).

8.6 Interim conclusions

Article 24 establishes the principle of non-discrimination in tax treaties. The various paragraphs of Article 24 list the circumstances which, for tax treaty purposes, should not be subject to discriminatory treatment. For the purpose of determining if a particular situation is protected under one of the clauses of Article 24, a test should be performed: to compare the taxpayer with a hypothetical situation in which he would be either a national or a resident of the other contracting State. If in that hypothetical situation the taxpayer would benefit from the application of the relevant legislation, then the non-discrimination provision is being breached. It is not required that all circumstances are entirely identical except in regard to the specific factor protected under one of the non-discrimination provisions. The requirement is that the relevant factor for the adverse treatment is within one of the paragraphs of Article 24, even if other conditions that are merely incidental are not exactly the same.

Paragraph 1 refers to the nationality clause and prohibits nationals of one contracting State to subject nationals of the other contracting State to other or more burdensome taxation than its own nationals that are in the same circumstances.
Paragraph 3 deals with unfavourable taxation with regard to the PE that an enterprise of one State has in the other Contracting State. This provision aims at guaranteeing that the PE taxation will not be less favourably levied. Apparently the wording of paragraph 3 is narrower than the wording adopted by paragraph 1 (and 5) and consequently, it provides for a lower standard of protection. In that sense, discriminatory treatment arises only in situations that result in more burdensome taxation of PEs either as a consequence of a different tax base or tax rate. However, it is possible to consider an alternative interpretation whereas the term taxation in paragraph 3 should have an identical meaning as in paragraph 1 in order to include all the elements of a tax system. Therefore PEs should benefit from all the rules as they apply to resident companies except those that, by nature, cannot be extended to PEs.
Paragraph 4 provides for a non-discrimination principle to be applicable to deductible payments made to residents of the other contracting State. This deductibility discrimination principle is subject to an exception allowing a State to deny a deduction based on the arm's length principle reflected in Articles 9(1), 11(5) and 12(4).
Finally, paragraph 5 includes a clause 5 prohibiting that a domestic enterprise whose capital is wholly or partially owned or controlled directly or indirectly by residents of the other contracting State to be subject to other or more burdensome taxation or connected requirements than a similar enterprise whose capital is owned by residents of the taxing

country. Although the provision is silent on the criteria to ascertain similarity, it is accepted today that a comparison should be made between foreign-owned local companies with similar locally owned companies. Its scope is restricted to instances where the resident subsidiary is subject to less favourable treatment because of it being controlled by a non-resident rather than by a resident company.

There is no clear overview of the policy surrounding the non-discrimination article. This creates uncertainty when dealing with the interpretation and application of this provision and its exact scope. The main goal of tax treaties is to facilitate international trade by minimizing barriers in the exchange of goods and services across national boundaries. For that purpose, tax treaties fulfil different purposes among which, those that prevent discriminatory treatment. Determining the treaty purposes it is relevant for the interpretation process under Article 31 (1) VCLT. The non-discrimination provision determines a special purpose of tax treaties and therefore, should be subject to a functional and teleological interpretation.

Chapter 9

Non-discrimination in Tax Treaties and Cross-border Group Taxation

9.1. Introduction

The following sections provide an analysis of the application of the non-discrimination principle of Article 24 to tax groups. It will focus on Article 24 paragraphs 1, 3, 4 and 5 since these are the provisions which may be potentially relevant to discriminatory situations involving tax group regimes. The purpose is to evaluate in what situations the non-discrimination provision in tax treaties may constitute a ground to extend the scope of application of group taxation regimes. In that regard, it starts by considering whether each of those paragraphs of Article 24 may apply to tax groups. It follows by testing its application to different types of tax group situations. Based on the existing types of tax group regimes and the way they operate, the analysis to be made will also consider if the differences in those regimes may lead to a different conclusion about its discriminatory character or not.

9.2 Article 24 (1): the nationality clause and its application to tax groups

The application of the nationality clause of Article 24 (1) to tax groups – although with a very limited scope as shown below – seems indisputable. The Commentary does not make any general reference aside from providing an example[523] of a situation where group consolidation does not apply due to particular circumstances. *A contrario* one can infer that Article 24 (1) will indeed apply to (certain) tax group situations. That is also the conclusion stated in the OECD discussion draft on Article 24:[524]

> "The Working Group agreed to clarify the effect of the limited scope of paragraph 1 to regimes applicable to groups of related companies (…) Paragraph 1 may still be applicable to resident companies subject to unlimited taxation who are simply not incorporated in that State."

9.2.1 Testing the nationality clause in tax group situations

As stated above, in order to verify whether the nationality clause is being violated, the test to be followed requires deeming the nationality of the other Contracting State involved and leave all the other relevant factors unchanged. A violation will occur in the case the

[523] See paras. 24 and 25 of the OECD Model Commentary to Article 24.

[524] See para. 12 of the OECD public discussion draft "*Application and Interpretation of article 24 (non-discrimination)*" dated 3 May 2007.

taxpayer is able to claim the tax group benefit after the relevant assumption – nationality – has been made.

In all the situations analysed below, it is assumed that place of incorporation is the criterion to determine nationality of companies in accordance with the respective domestic laws.

9.2.1.1 Foreign parent with subsidiary in another State

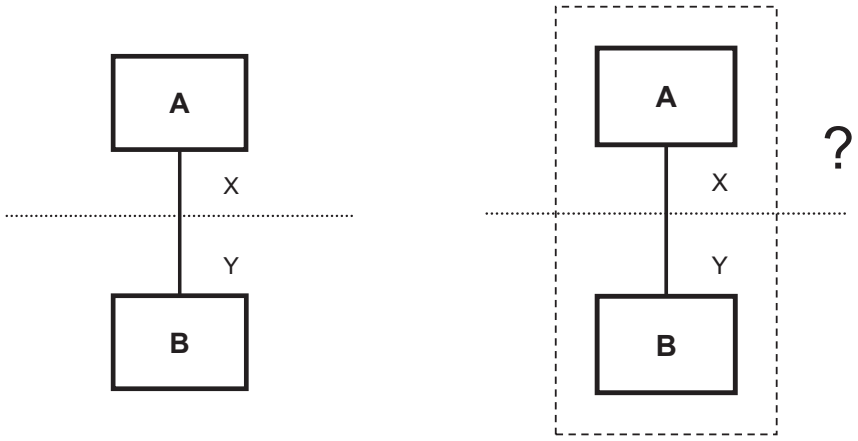

Company A is incorporated and effectively managed in State X. Similarly, Company B is incorporated in State Y and effectively managed in that State.
Under the laws of both States, the place of incorporation is the criterion for determining nationality as well as one of the criteria for corporate tax residence (together or alternatively with place of effective management). Both State X and State Y have concluded a tax treaty with a provision which follows Article 4 (3) of the OECD Model Convention, that is, in the case of dual residence, the company will be considered to be resident in the State where its place of effective management is situated.
Company B applied in State X to be included in a tax group, with Company A as its parent company. The tax authorities of State X denied the possibility of company B to qualify as a group member since that company was not incorporated in State X.

In this case, the different treatment arises not only from the difference of nationality but also from another relevant circumstance: residence. In fact, under the domestic laws of State X (and also State Y) a company derives not only its status from being incorporated therein; place of incorporation is also a criterion for residence. In this case, company B is not a resident in State X and since paragraph 1 only prohibits discrimination based on nationality and requires all other relevant factors, including residence, to be the same. Therefore, this situation is not covered by the scope of article 24 (1).

9.2.1.2 Dual residence situations

From the analysis conducted it is clear that the Commentary – correctly in my view – determines that residence is determined for the purposes of Article 24 (1) after application of the tie-breaker rule. In other words: the tie-breaker rule affects the application of the nationality non-discrimination provision and therefore, determining the relevant residence for treaty purposes should precede its application. Accordingly, it is relevant to analyse situations involving dual residence companies and how can they impact the application of Article 24 (1) within the particular context of tax groups.

A first situation to be analysed involves a *foreign subsidiary with place of incorporation in one State but is effectively managed in the same State of its parent company*.

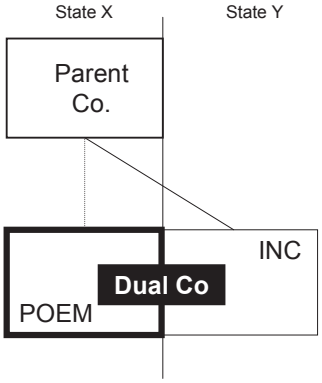

Company B is incorporated in State Y but is effectively managed in State X. Company A is incorporated and effectively managed in State X. Under the laws of State Y, the place of incorporation is a criterion for determining nationality as well as corporate tax residence. In the case of State X, the place of effective management is the criterion (or one of the relevant criteria) to determine residence. Both State X and State Y have concluded a tax treaty containing a provision that follows Article 4 (3) of the OECD Model Convention, that is, in the case of dual residence, the company will be considered to be resident in the State where its place of effective management is situated (State X).
Company B applied in State X to be included in a tax group having Company A as its parent company. The tax authorities of State X denied the possibility of company B to qualify as a group member since that company did not fulfil one of the requirements: to have both place of incorporation and place of effective management in State X.

Following Article 24 (1), a discriminatory treatment is forbidden if based solely on nationality with all the relevant circumstances, in particular, residence, being the same. In this case, company B is a resident of State X not only under its domestic law but also under the applicable tax treaty since it is effectively managed in that State and the place of effective management is the relevant criterion to determine the tax residence. Therefore, and in this case, residence has no relevance whatsoever regarding the different treatment

under consideration. In other words, the different treatment of State X when denying the inclusion of Company B in a tax group is only based on the fact that such company is not a national – incorporated – in that State. Therefore, this falls within the scope of Article 24 (1).

A similar case to this situation was dealt by the *Hoge Raad* in its judgment of 16 March 1994.[525] The issue at stake involved the application of the former Netherlands fiscal unity rules[526] which provided for a cumulative requirement in order for companies to qualify for the Netherlands fiscal unity: both incorporation and residence in the Netherlands. A company incorporated under the Netherlands Antilles law but effectively managed in the Netherlands and 100% held by a Netherlands BV applied for its inclusion in the Netherlands fiscal unity rules. The purpose of such application would be to allow the profits of the Antilles subsidiary to be offset against the losses of the parent Netherlands company. Such claim was denied by the tax authorities on the grounds that the fiscal unity regime was only available to companies incorporated under the laws of the Netherlands. This reasoning motivated an appeal by the taxpayer based on a discriminatory treatment in breach of Article 1 (1) of the Tax Arrangement of the Kingdom which has a similar wording to Article 24 (1) of the OECD Model. Since the company from the Netherlands Antilles had its place of effective management in the Netherlands and was subject to world wide taxation therein (via Article 34 (2) of the Tax Arrangement of the Kingdom which is similar to Article 4 (3) of the OECD Model) the *Hoge Raad* concluded that both a Netherlands and an Antilles company could be said to be in the same circumstances and therefore the denial to be included in the Netherlands fiscal unity was an infringement of the non-discrimination provision.

A second situation to be analysed involving dual resident companies and the application of the nationality provision regarding tax groups concerns a *parent company with place of incorporation in one State but effectively managed in the same State of its subsidiary*.

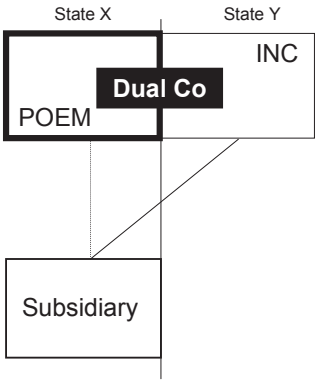

[525] *Hoge Raad*, case no. 27764 of 16 March 1994, *BNB 1994/191*.
[526] See C. van Raad, "Grenspverschrijdende Fiscale Eenheden: Hoe ver Reikt de Bescherming van non-discriminatiegeboden?", *WFR 1994/1717* and Stef van Weeghel, "Fiscal Unity and Discrimination", 34 *European Taxation* 8, IBFD (1994), pp. 278-280.

Here an example is assumed according to which Company A is incorporated in State Y but effectively managed in State X. Company B is incorporated and effectively managed in State X. Under the laws of State Y, the place of incorporation is a criterion for determining both nationality and corporate tax residence. In the case of State X, the relevant place of effective management is a criterion (or one of the criteria) for corporate residence. The example can be represented as follows:

Both State X and Y have concluded a tax treaty with a provision which follows Article 4 (3) of the OECD Model Convention, that is, in the case of dual residence, the company will be considered to be resident in the State where its place of effective management is situated (State X).

Company A applied in State X to form a tax group as a parent company of Company B. The tax authorities of State X denied the possibility to form a group since Company A did not fulfil one of the requirements of a qualifying parent company: to have both place of incorporation and place of effective management in State X.

This situation is similar to situation 2 above, the only difference being that now it is the parent company and not the subsidiary which is subject to the discriminatory treatment. Company A is a resident of State X not only under its domestic law but also under the applicable tax treaty since it is effectively managed in that State and the place of effective management is the relevant criterion to determine the tax residence. Accordingly, residence has no relevance whatsoever regarding the different treatment under consideration. The different treatment of State X when denying the inclusion of Company A in a tax group is only based on the difference of nationality (place of incorporation). Therefore, this situation is also within the scope of application of paragraph 1 of Article 24.

9.2.1.3 Parent company with two subsidiaries ("sister companies") incorporated in one State but effectively managed in the same State of its sister company

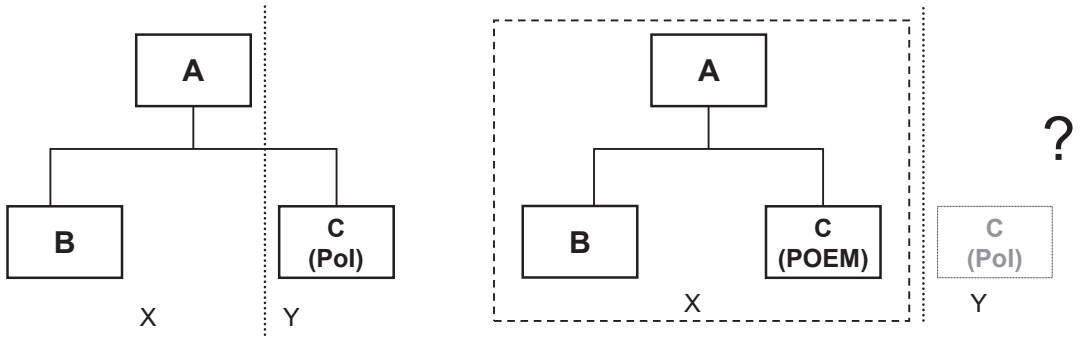

Companies A and B are incorporated and effectively managed in State X. Under the laws of this State the place of incorporation or of effective management are criteria for determining corporate tax residence. Company C is incorporated in Y but effectively managed in State X. Under the laws of State Y, the place of incorporation is a criterion to determine tax residence. The Tax Treaty between X and Y follows the OECD Model but Article 4 (3) provides that dual residence situations are solved in favour of the State of incorporation. According to the laws of State X, qualifying entities of a tax group must have both the place of incorporation and that of effective management in that State. The tax companies apply to form a tax group regime, but company C is denied since it was not incorporated in State X.

This situation serves to illustrate the importance of determining the relevant residence for tax treaty purposes and how that affects the application of the non-discrimination provision of paragraph 1 of Article 24 as regards the object of comparison, that is, to determine if two companies are in the same circumstances in particular as regards residence.

The case is based on Example 5 provided in paragraphs 24 and 25 of the Commentary to the OECD Model and enhances two situations: (i) the importance of the application of the tie-breaker rule for determining residence; and (ii) as a consequence the difference between a discriminatory treatment based on nationality or residence (that is, in jurisdiction to tax).

In fact and with regard to the first issue, although company C is indeed resident in State X in accordance with the domestic laws of this State (Article 4 (1) of the relevant Treaty) it is however a resident of State Y further to Article 4 (3) since the tie-breaker rule favours the place of incorporation. This leads to the second issue at stake: although the less favourable treatment provided by the law of State X is indeed based on nationality, and analysis of the case allows to conclude that company C is not in the same circumstances as a comparable company in State X since through the application of the applicable tax treaty it is not liable to tax on its worldwide income. The relevance of residence with respect to the benefits of group taxation is evidenced by the fact that certain provisions of tax treaties (e.g. Articles 7, 10, 21,) would prevent State X from taxing certain types of income derived by Company C.

Therefore in this case, as the relevant comparator is lacking for the non-discrimination provision of paragraph 1 to apply, the benefits of the tax group regime of State X do not have to be extended to company C.[527] Accordingly, this situation would not fall within the scope of Article 24 (1).

[527] The *Hoge Raad* case no. 24738, of 29 June 1988, *BNB 1988/331*. In this decision the Court ruled on whether a fiscal unity under Article 15 of the CITA could exist between a parent company and a subsidiary, both BVs, where the subsidiary had its place of incorporation in the Netherlands but place of effective management in the UK. The case concerned the application of the Netherlands fiscal unity regime and, therefore, did not involve the application of a tax treaty (non-discrimination) provision. In that case, the Netherlands Supreme Court considered that a fiscal unity indeed could apply because the subsidiary was

Another relevant aspect regarding the application of paragraph 1 of Article 24 of the OECD Model to tax groups is the interpretation of the meaning of the discriminatory treatment arising from *"other or more burdensome taxation and connected requirements"*.

Applying a narrow interpretation to the meaning of *other taxation* would imply that the claim of discriminatory treatment due to the denial of entering into a tax group would only be possible in situations which would give rise to more burdensome taxation. *Other taxation*, in the sense of *other taxes* or *broader tax base* are not the regular situations which involve tax groups discriminatory treatment but rather the payment of more or less tax. Using an example: a certain company could claim discriminatory treatment if all the other requirements set forth in Article 24 (1) were met and the other company or companies of the group which claim for election have tax losses. In that case, the tax group regime would allow the profitable company claiming to qualify as a group member to offset those losses against its own profits and, therefore, reduce is on the whole tax burden. In other words: if that company should not be allowed to enter into a tax group it would suffer more burdensome taxation, that is, it would have to pay more tax. The same reasoning could apply, for instance, in the case of a transfer of assets when it is possible for such transfer to occur within a group under a tax exemption.

---

incorporated in the Netherlands and as consequence, was deemed to be a resident under Article 2 (4) of the CITA. Reference should be made to the fact that the *Hoge Raad* reversed the decision of the Court of Appeals of Amsterdam. This Court had previously considered that the subsidiary could not form part of the fiscal unity because under Article 4 (3) of the Double Tax Treaty concluded between Netherlands/United Kingdom the residence of the company for treaty purposes was in the UK and accordingly, one of the requirements for applying Article 15 CIT (the residence of the subsidiary) was not met. Most probably if the claim had been based on a tax treaty the outcome would have been different considering that in such case, the Netherlands would not be entitled to tax the profits of the subsidiary under the applicable treaty. For an analysis of the case, see G. Slot, comment *BNB* 1988/331, 29 June 1988, C. van Raad, "Internationale Aspecten van de Toepassing van Art. 15 WET", *WFR 1989/319* and Frank van Bruschot & Stef van Weeghel "Fiscal Unity – Profit (Loss) of a Permanent Establishment", *European Taxation* 3, IBFD (1989), pp. 98-99.
A different understanding was followed by the Finish Tax Authorities (Central Board of Taxation) regarding the application of the group contribution system. Again the case did not involve the application of a tax treaty non-discrimination provision. At stake were two Finish subsidiaries held by a Finish incorporated parent company which was effectively managed in Denmark. In that situation – and although no treaty benefit claim was at stake – the tax authorities considered that the group contribution system could not apply to the case of a company which was deemed to be resident outside Finland in accordance with the laws of the applicable treaty since the deduction at the level of the contributing entities would not be compensated by the taxation of the contribution at the level of the receiving entity. The case was decided by the Finish Supreme Court (*KHO:2003:33*) in its judgment of 17 June 2003. which although not referring expressly to this issue, concluded that not all the conditions for applying the group contribution system were verified, i.e. the residence of the receiving company. See for comments, Lari Hintsanen and Kennett Petterson, "Supreme Administrative Court Rules on Taxation of Dual Resident Companies", *European Taxation* 4, IBFD (2004), pp. 192-196 and Seppo Pentilla, IFA Finland Report, "Non-Discrimination", *Cahiers de droit fiscal International*, Vol. 93a, (2008), p. 263.

On the contrary, the non-discrimination provision would not apply in some other cases such as: (i) if all the companies of the group had profits; or (ii) the company claiming the discriminatory treatment had losses and the remaining companies for which group election is being claimed were profitable. In those cases, the impossibility to qualify as a tax group member would not lead to more burdensome taxation since the company at stake would not be paying less tax than it would have to if it were not a group member.
If this should be a most exceptional case – as typically the claims of discriminatory treatment will be based on situations leading to payment of less tax – it still should not deter an analysis of what should be correct meaning of the expression, other taxation. In that regard, the object and purpose of the treaty seem, in my view, to sustain the approach under which taxation on a different legal basis – that is, based on the tax group regime or not – is the appropriate meaning of other taxation.[528] And, consequently it is not necessary for such other tax treatment to result in more burdensome taxation as well. This interpretation has already been followed in some Court decisions.[529]

A different approach would even lead to a rather odd situation: that in a certain tax year, there could be an argument to claim discriminatory treatment but not in the other, with the emphasis being not in the impossibility to benefit from the group taxation regime but rather on the tax position (profit or loss making) of the other group members.

9.3 Article 24 (3) and its application to tax groups

As has been evidenced in Part II of this thesis, PE are entities which may be included in tax groups, either as parents or members of the group. In that regard, the scope of Article 24 (3) should also comprise tax group situations.

According to the OECD Commentary[530] however:

> "The equal principle of paragraph 3 only applies to the taxation of the permanent establishment's own activities. That principle, therefore, is restricted to a comparison between the rules governing the taxation of the permanent establishment's own

[528] James O'Brien raises the possibility of whether the inability to benefit for group taxation regime could constitute a violation of a "requirement connected therewith". His analysis is conducted on the US consolidated return which is an elective regime. He concludes that a literal reading would lead to a negative answer as it could be argued that the denial of the right to make an election does not constitute an imposition of a more burdensome "requirement". See, James O'Brien "The NonDiscrimination Article in Tax Treaties", *Law & Policy in International Business* 10 (1978), p. 583, footnote 137. In addition it should be kept in mind that this argument under which the inability to benefit from group taxation regimes would breach the requirement connected therewith would only be valid in the case of those regimes which are elective but not for cases in which they are mandatory (e.g. Denmark). Therefore, as said, it is preferable to consider that the inability to benefit from group taxation regimes falls within the meaning of "other taxation". Otherwise, only elective but not mandatory tax group regimes would be included within a "requirement connected therewith".
[529] See infra the analysis to the decisions in cases *Regeringsratten* (Swedish Supreme Administrative Court) *of 26 November 1993 ref 91 I* and *1993 not. 677* and *Felixstowe Dock and Railway Co Ltd and others v Revenue & Customs Commissioners* [2011] UKFTT 838 (TC), 19 December 2011.
[530] See para. 41 of the OECD Model Commentary to Art. 24.

> activities and those applicable to similar business activities carried on by an independent resident enterprise. It does not extend to rules that take account of the relationship between an enterprise and other enterprises (e.g. rules that allow consolidation, transfer of losses or tax-free transfers of property between companies under common ownership) since the latter rules do not focus on the taxation of an enterprise's own business activities similar to those of the permanent establishment but, instead, on the taxation of a resident enterprise as part of a group of associated companies."

This statement of the Commentary arises from the conclusions reached in the OECD discussion draft on Article 24[531] according to which:

> "Paragraph 3 would neither oblige States to extend domestic group taxation regimes to permanent establishments of foreign companies or domestic companies with a foreign head, nor would it oblige States to take into account losses of a foreign permanent establishment of a domestic company."

This later statement was not included in the Commentary. However, following the above, it has been argued[532] that paragraph 3 would not require the extension of the application of tax group regimes to permanent establishments. The reason, according to the OECD, would be that this paragraph would only be related to the taxation of the profits of the permanent establishment itself. Therefore, the rules related to the income of groups of companies would be excluded. This understanding seems to constitute a very restrictive interpretation of Article 24 paragraph 3 and which arguably finds any support in the wording of this provision. In fact, the participation of a PE in a tax group regime relates to the profits (and losses) of the PE itself,[533] as the inclusion in the group implies at least the offsetting of the losses and profits of the participating entities. In other words, and contrary to the Commentary, if the relationship of the PE with other entities affects the taxation of the PE, then such relation is relevant for the application of paragraph 3 in its plain wording. Therefore, it is submitted that paragraph 3 does indeed apply in the context of tax groups.

---

[531] See para. 13 of the OECD public discussion draft "*Application and Interpretation of article 24 (non-discrimination)*", dated 3 May 2007.

[532] See Silke Bruns "Taxation and Non-Discrimination: Clarification and Reconsideration by the OECD", *European Taxation* 9, IBFD 2008, p. 490.

[533] Luc Hinnekens and Philipe Hinnekens, IFA General Report, "Non-discrimination", *Cahiers de droit fiscal international*, Vol. 93a, (2008), p. 30.

9.3.1 – Testing the PE clause in tax group situations

9.3.1.1 Parent company with foreign PE

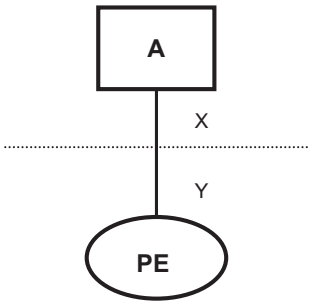

These types of situations are not covered by tax treaty non-discrimination as they refer to outbound situations and not directly with the taxation of the PE.
In addition, this situation applying the comparability test and replacing the PE by a hypothetical subsidiary resident in the PE State would not lead to a change in the outcome of excluding the PE from the tax group as also a subsidiary in State Y could not benefit from a tax group. In other words, for the purposes of applying the PE non-discrimination[534] clause, the comparison is made by placing the PE on equal footing for tax purposes with a legally independent enterprise in which the PE is situated. It is clear that also in that case, it would not be possible to apply the tax group.

9.3.1.2 Parent company with foreign PE in the same State of the subsidiary

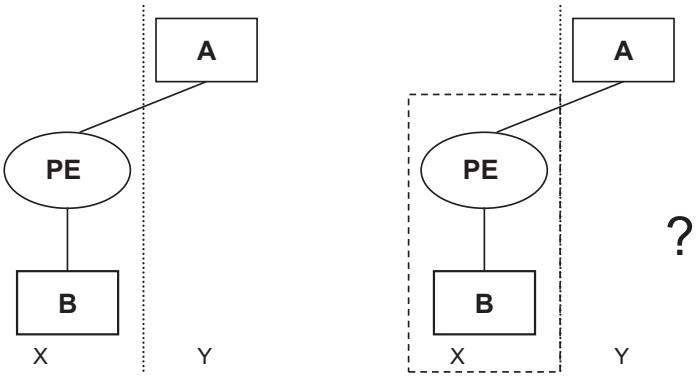

[534] See Klaus Vogel, *On Double Taxation Conventions: A Commentary to the OECD, UN and US Model Conventions for the Avoidance of Double Taxation on Income and Capital with Particular Reference to German Treaty Practice*, 3rd edition Kluwer Law International, The Hague (1997), p. 1314.

A different approach, however, was followed by the Spanish Supreme Court in two cases[535] which concerned the application of the consolidation regime involving a permanent establishment of a Belgian company, which held majority participations in Spanish subsidiaries. The claim was based on the breach of the Spanish tax legislation with Article 24 (4) of the DTC Spain/Belgium (which corresponds to paragraph 3 of the OECD Model). It was based on the denial to apply for the consolidation regime between a permanent establishment of a Belgian company acting as a dominant company of the group and its Spanish subsidiaries due to the requirement under Spanish law that all entities of the group had to be companies resident in Spain. The Court upheld that there was no breach of the Spanish legislation. This decision was properly criticized[536] due to the erroneous comparison performed by the Court: rather than looking at the entity being discriminated – the Belgian permanent establishment in Spain – it at to the treatment of an exact same situation, but in Belgium, by verifying whether it would be possible to apply the consolidation regime in Spain in the case of a Spanish permanent establishment in Belgium with Belgian subsidiaries.[537] The Court concluded that there was no discrimination since the tax treatment in both cases was the same, that is, that the consolidation regime was only open to companies in Spain. This decision enhances the importance of finding the relevant comparator in order to reach a correct application of the non-discrimination provisions: the correct comparison in paragraph 3 of Article 24 is between a permanent establishment (the entity which is being discriminated) and a domestic company which in this case, would mean to compare the Belgian permanent establishment with a Spanish controlling entity holding Spanish subsidiaries. If that had been the case, most likely the Court would have found that the Spanish legislation was indeed in violation of Article 24 (4) of the DTC Spain/Belgium because the permanent establishment was being subjected to a less favourable treatment than a Spanish company, which is the situation that is covered under that provision in tax treaties.

It is important to stress once again that the difference in wording of paragraph 3 as compared with paragraphs 1 and 5, and that this may influence the possible claim of PE discriminatory treatment. An immediate reading of the wording "less favourable taxation" suggests that different treatment for the purposes of paragraph 3 must lead to a result in which the tax payable by the PE is higher than the tax payable by a comparable resident company. This means that a PE may only claim the benefits of the tax group in cases in which, for instance, the offsetting of profits and losses leads to a lower taxation of the PE. For instance, within the scope of a tax group which is based on the group contribution

[535] Tribunal Supremo, Decision of 15 July 2002, Rec. no. 4517/1997 and Decision of 12 February 2003, Rec. no. 8720/1998.

[536] See Klaus Vogel, Tax Treaty News, *Bulletin-Tax Treaty Monitor* 2 (2003), p. 39 and Luís A. Martinez Giner and Yolanda Martinez Munoz, IFA Spain Report, "Non-discrimination at the crossroads of international taxation", *Cahiers de droit fiscal international*, Vol. 93a, (2008), p. 554.

[537] Literally: "*Sin embargo, tal infraccion exigiria que nuestras leyes permitieran la consolidacion entre el establecimiento permanente en Bélgica de una sociedad anónima espanola y las filiales de ese establecimiento permanente en Bélgica*".

system, paragraph 3 will require extending the group benefits to a PE if the intra-group contribution between a PE and a resident company is made in one direction, that is, from the PE to the resident company as, in that case, the contribution will constitute a deduction for tax purposes at the PE level and correspondingly, a lower tax base. However, the application of paragraph 3 will likely be rejected in the opposite situation of a resident company making a contribution to a PE. While rejecting the possibility to include a PE within the scope of the tax group constitutes (the subject) discriminatory taxation between resident and non-resident enterprises within the wording of paragraph 3, the fact is that materially the PE itself, as the receiver of the contribution is not subject to less favourable treatment as in fact, such contribution increases the respective tax base.[538] Another simple example could involve the case of a profit-making parent company (+500) with a PE in the same State that incurred losses (-80). In that event, the denial of the PE joining the tax group would not result in the PE being subject to less favourable taxation. Simply no taxes would be due without inclusion in the tax group.

As previously stated, it may be argued that it is possible to follow a broader interpretation of the PE clause. In this regard, an alternative interpretation is to consider that the difference in wording in paragraph 3 merely aims at reflecting that this provision does not address the situations that involve other taxation or connected requirements when they are inherent to the differences between a PE and a subsidiary. This interpretation of paragraph 3 starts by considering that the purpose of this provision is actually to end the discriminatory treatment of PEs. To fill its purpose, such interpretation should comprise all elements of a discriminatory treatment except those which, by their nature, differentiate PEs from subsidiaries. As a consequence, taxation in paragraph 3 should be understood in the same terms as paragraph 1 in order to include all the elements of the domestic tax system.[539] Therefore, PEs should benefit from all the tax rules as they are applicable to resident companies except those which, for practical reasons, are connected to the different nature of the PE and a resident subsidiary cannot be extended to PEs. Ultimately, this means that it is not relevant that the PE itself is not subject to unfavourable tax treatment. A PE should benefit from all tax preferences that apply to a resident company,[540] Therefore, comprising all elements of the national tax system is not limited to merely the amount of tax but to everything that is related to the taxation of the PE.[541] Consequently, in the

[538] This interpretation has been followed by the Norwegian Ministry of Finance. See Geir Peter Hole, IFA Norway Report "Non-discrimination at the crossroads of international taxation", *Cahiers de Droit Fiscal International* 93b (2008), pp. 449-450.

[539] See Kees Van Raad, "*Non-Discrimination in International Tax Law"*, Kluwer Law International, The Hague (1986), p. 142 or Niels Bammens, *The Principle of Non-Discrimination in International and European Tax Law*, IBFD Doctoral Series no. 24 (2012), p. 235.

[540] Similarly see Raul-Angelo Papotti, "Treaty Non-Discrimination Clauses in Group Consolidation Situations", 31 *Intertax* 10, Kluwer Law International (2003), p. 326.

[541] This would mean that in the example referred to above para. 3 would indeed require extending the benefits of the tax group regime to PEs. An alternative interpretation in order to support the application of para. 3 in these cases is to adopt an integrated view when dealing with tax groups in order to take into account the position of the whole group.

examples referred to above, even if the PE itself is not subject to a higher tax burden that will not preclude the possibility to claim the non-discriminatory protection of paragraph 3.

A further issue to be considered is whether the application of paragraph 3 of Article 24 may be denied in the case of double use of losses. Considering the situation above, it is assumed that the subsidiary in State X incurred losses and State Y applies a cross-border group taxation regime therefore allowing the losses incurred by the foreign subsidiary to be offset in the State of the parent company. The question that arises is whether paragraph 3 may be used in order to claim the equal treatment between permanent establishments and resident enterprises in State X and accordingly, to claim the possibility of the PE to be a group member in such State with the consequent offset of the losses of the subsidiary against the PE's profits. The interpretation of the second part of paragraph 3 seems to imply a negative answer. The sentence reads as follows:

> "This provision shall not be construed as obliging a Contracting State to grant to residents of the other Contracting state any personal allowances, reliefs and reductions for taxation purposes on account of civil status or family responsibilities which it grants to its own residents."

It is acknowledged that both the wording of this sentence as well as the Commentary make clear that it is only applicable to individuals.[542] It aims at preventing that individuals may enjoy allowances both in the respective State of residence and, by virtue of the PE non-discrimination provision, also in the PE State. Ultimately, one can say that the ultimate purpose of that second part is mainly to ensure that persons do not obtain greater advantages than residents pursuant to the combined application of the legislation of the respective State of residence and in the other State by virtue principle of equal treatment of PEs set forth in the first sentence.[543] Therefore, the State in which the PE is situated may reject providing the double entitlement in two different States to allowances and reliefs.

Based on this and as regards the concrete application to tax groups it seems[544] that paragraph 3 may not be interpreted as binding a Contracting State to allow the losses of resident group members to be set off against the profits derived by a non-resident through a PE under the domestic group taxation regimes, when those losses may be set off against the profits of the non-resident in its residence State under a cross-border group taxation regime applicable in such State. A contextual interpretation of the provision – considering, in particular, that it was not originally addressed for group taxation situations – implies, in my view, that in this example, State X could refuse the offsetting of losses and therefore

[542] See John Avery Jones et al. "The Non-discrimination Article in Tax Treaties", *European Taxation* 10 (1991), pp. 337-338.
[543] See para. 36 to the Commentary to Art. 24 (3) of the OECD MTC.
[544] See Francisco Avella, "Dual Residence, Group taxation and Tax Treaty Law," in Matthias Hoffstatter and Patrick Plansky (eds.), *Dual Residence in Tax Treaty Law and EC Law*, Series on International Tax Law Univ.-Prof. Dr. Michael Lang (editor), Volume 60, Linde Verlag 2009, pp. 308-309 and 314.

extending its domestic group taxation regime to a PE in the case those losses could be setoff in State Y based on a the cross-border group regime granted therein.

9.4. Article 24 (4) and its application to tax groups

Article 24 (4) does not contain any reference as to its application to tax groups. However its application may become relevant in the context of a per-element analysis as analysed below[545] in the context of interest deduction limitations, which are not applicable within domestic tax groups.

9.5. Article 24 (5) and its application to tax groups

The fundamental question to be dealt with is whether paragraph 5 is indeed applicable in the case of group taxation regimes. In other words, whether the wording of the foreign ownership provision requires a State to apply its domestic special tax regimes for groups of companies (e.g. consolidation or transfer of losses/profits, inter-company dividends, tax-free transfers of assets, etc.). And, if the answer is positive to what extent a State is required to apply such group taxation regimes.

A possible alternative would be to consider that Article 24 does not apply at all to group taxation regimes. This seems to find support in the following paragraph of the 2007 OECD Discussion Draft[546] on the non-discrimination provision which, when referring to groups of companies which stated that:

> "These questions [relating to groups of companies] are linked to the meaning of the term "similar enterprises" in paragraph 5. Contrary to paragraph 1, paragraph 5 does not explicitly require that the enterprises must be in the same circumstances. However, the term "similar enterprises" might imply that they should be comparable and that this is not always the case. The term "similar enterprises" might suggest that paragraph 5 is dealing with companies as separate entities only and that as far as transactions between the subsidiary and the parent are concerned, the subsidiary of a domestic parent might not be a similar enterprise. Also, the question has been raised whether or not an enterprise is similar" if the foreign parent company is not necessarily subject to national taxes on a worldwide basis".

This led the OECD Working Party to formulate the following conclusion[547] in its Discussion Draft:

> "As regards paragraph 5, the Working Group agreed that the new proposed Commentary should clarify that the paragraph is similarly limited to the taxation of the enterprise itself and generally excludes issues related to the taxation of the group

[545] See *infra* 9.7.
[546] See para. 11 of the OECD Discussion Draft on Art. 24 (Non-Discrimination) – Application and interpretation of Article 24 (Non-discrimination) (May 2007).
[547] See para. 14 of the OECD Discussion Draft on Article 24.

> to which the enterprise belongs. Therefore, no consolidation of two subsidiaries of a foreign parent would be required under paragraph 5".

This paragraph would allow arguing that the foreign ownership provision is not applicable to domestic group taxation provisions based on the interpretation of the meaning of the expression "*similar enterprises*". This would involve referring to the company concerned as a separate enterprise only and therefore, transactions with other members of the group should be ignored because, in respect of such transactions, similarity between subsidiaries with domestic and non-resident parent companies could not be achieved.[548] This interpretation is hardly conceivable. Nothing in the history[549] of this provision suggests that using similar rather than same should lead to a different interpretation as regards the comparator or that similarity involves looking at the company as a separate enterprise. In fact, the purpose of the foreign ownership provision is precisely to compare a hypothetical subsidiary of a domestic parent company with the actual situation of a subsidiary with a foreign parent company and nothing in the wording of this provision implies a different comparator when dealing with group taxation regimes. In all events and assuming that there would be a requirement for treating the subsidiary as a separate enterprise, it is difficult to understand why the taxability of the foreign parent becomes relevant.

These statements were not included in the Commentary to the OECD Model[550] (following the 2008 amendments), which sets out in its paragraph 77 the following:

> "Since the paragraph relates only to the taxation of resident enterprises and not to that of the persons owning or controlling their capital, it follows that it cannot be interpreted to extend the benefits of rules that take account of the relationship between a resident enterprise and other resident enterprises (*e.g.* rules that allow consolidation, transfer of losses or tax-free transfer of property between companies under common ownership). For example, if the domestic tax law of one State allows a resident company to consolidate its income with that of a resident parent company, paragraph 5 cannot have the effect to force the State to allow such consolidation between a resident company and a non-resident parent company. This would require comparing the combined treatment of a resident enterprise and the non-resident that owns its capital with that of a resident enterprise of the same State and the resident that owns its capital, something that clearly goes beyond the taxation of the resident enterprise alone."

In any case, if understood in accordance with that cited above of excluding the application of Article 24 to tax groups,[551] I believe that the 2008 addition to the Commentary is not supported by the text of paragraph (5).

---

[548] See John F. Avery Jones, "Understanding the OECD Model Tax Convention: The Lesson of History", 10 *Florida Tax Review* 1 (2009), p. 47.

[549] See John F. Avery Jones, "Understanding the OECD Model Tax Convention: The Lesson of History", 10 *Florida Tax Review* 1 (2009), pp. 40-47.

[550] See para. 77 of the OECD Model Commentary to Article 24.

[551] See Silke Bruns, "Taxation and Non-Discrimination: Clarification and Reconsideration by the OECD", 48 *European Taxation* 9, IBFD (2008), p. 488, following the understanding that, pursuant to para. 77 of the Commentary, a consolidation of two subsidiaries of a foreign parent does not fall under Article 24 (5).

First of all there is nothing in the wording of paragraph (5) that suggests that because one should look at a company as a separate enterprise it is not possible to make the comparison – which requires both the subsidiary and its parent company - for the purpose of determining "*similar enterprises*". I believe that the Commentary is confusing two separate moments because otherwise, that would mean to deprive this clause of any meaning. The history of this clause seems to reveal exactly the opposite according to the statements of the Fiscal Committee's minutes referred to. The whole purpose of this provision is precisely to treat the subsidiary of a domestic enterprise as a comparator – similar enterprise – to the actual subsidiary of a foreign enterprise. In fact, if the reason for the discrimination is the foreign ownership or control of an enterprise, that is only due to the existence of such relation – direct or indirect ownership or control – between resident and non-resident companies.

Therefore, the determination of a discriminatory situation under this clause requires two separate steps: first to compare the taxation of an enterprise carried on by a resident of a Contracting State whose capital is owned or controlled by one or more residents of the other Contracting State with the taxation of that enterprise in case it would be held by residents of that same Contracting State. The second step requires looking at the enterprise as a separate and distinct entity to check if the discriminatory taxation arises due to the fact that it is owned or controlled by non-residents of that State. This is to say that in this second moment, one is looking exclusively to the taxation of the profits of that enterprise and not to a combined treatment of both resident enterprise and non-residents. Anything which is no longer related to such taxation of the enterprise, therefore, is outside of the scope of this clause. That is what is in the wording and purpose of this provision. This being said, there is no reason whatsoever why it does not apply also to tax group situations. The fact that in potential tax group scenario for object of the comparison is necessary to take into account the relation between residents and non-resident companies, does not mean that in the second moment, to evaluate the discriminatory treatment, one is not looking exclusively at the taxation of the separate enterprise.

This interpretation would allow to conclude that Article 24 is indeed applicable to group taxation regimes but restricted to the territory of each State involved. The understanding that paragraph 77 of the Commentary represents a total exclusion of the benefits of group taxation regimes under paragraph 5 - rather than a limitation to exclude cross-border situations - based on the argument that Article 24 (5) only relates to the taxation of the resident company itself and does not apply to rules that relate to the income of groups of related companies would be contradictory.[552] The participation of the resident company in a

[552] See also in this regard James G O´Brien, "The Nondiscrimination Article in Tax Treaties", 10 *Law & Policy in International Business* (1978), footnote 137, p. 583 which holds that looking to each of the foreign owned subsidiaries separately and disregarding the group affiliation would constitute a too narrow reading of the foreign ownership clause and even would put the possibility to consolidate beyond the meaning of "taxation" stated in paragraph 5 of Article 24. Similarly see also Raul-Angelo Papotti, "Treaty Non-Discrimination Clauses in Group Consolidation Situations", 31 *Intertax* 10, Kluwer Law International (2003),

consolidation regime relates precisely to the taxation of such company itself.[553] In fact, if the relationship of the subsidiary to other group companies is based on foreign ownership, and affects the taxation of the resident company, then the taxation of the subsidiary itself is affected then such relation is relevant for the application of paragraph 5 in its precise wording.[554] Such narrow understanding would also be inconsistent with the Commentary to paragraph 1 of Article 24 which provides examples in which tax treaty non-discrimination (based on nationality) may be claimed to allow domestic consolidation whenever residence (tax liability) is not the relevant factor for the distinction. If the exclusion of the benefits of the group taxation regime limited to domestic subsidiaries is due to the fact that their parent company is resident in another State, that is the type of disadvantage targeted by paragraph 5 of Article 24.

The discriminatory treatment arises precisely because of the foreign parent company and that is the type of situation which literally fits into the wording of the foreign ownership provision. The aim of paragraph 5 is equal treatment of resident enterprises, irrespective of whether they are resident or non-resident controlled,[555] and that involves the benefits of group taxation regimes. On the whole, there seems to be no reason to deny the transfer of profits or losses between two resident subsidiaries of a non-resident parent company, as it does not cause any distortions of the tax treaty distributive rules.[556] In other words, the foreign ownership provision should be applied to the extent that the distributive rules do not preclude the state which is applying the group taxation regime to take into account the results of the other member(s) of the group.[557]

In my view, this is the interpretation that first and foremost arises from the wording of the provisions of the OECD Model itself, irrespective of the valuable support of the Commentary as an interpretation tool. Whatever, according to the OECD, may be the true aim and scope of this non-discrimination clause, it cannot override the wording of the OECD Model itself.

Article 24 (5) follows the general rule of interpretation of tax treaties provided in Article 31 of the VCLT: the ordinary meaning to be given to the terms of a treaty in accordance with

---

p. 323 who holds that disregarding the group structure would frustrate the comparator which requires taking into account all the legal and factual circumstances.

[553] See Luc Hinnekens and Philip Hinnekens, IFA General Report "Non-discrimination at the crossroads of international taxation", *Cahiers de droit fiscal international* 93A, p. 30.

[554] See John F. Avery Jones et al. "Art. 24 (5) of the OECD Model in Relation to Intra-Group Transfers of Assets and Profits and Losses", 3 *World Tax Journal* 2 (2011), p. 196.

[555] See Kees Van Raad, "Issues in the Application of Tax Treaty Non-Discrimination Clauses", *Bulletin* 8/9 IBFD (1988), p. 351.

[556] See Hugh Ault and Jacques Sasseville, "Non-Discrimination: A Reconsideration", 2 *World Tax Journal* IBFD (2011), p. 112 or J.B. David Oliver "Differential treatment or discrimination", *British Tax Review* 6 (1993), pp. 437-438.

[557] See Niels Bammens, *The Principle of Non-Discrimination in International and European Tax Law*, IBFD Doctoral Series no. 24, (2012), p. 408.

the basic rule set forth in Article 31 (1) of the VCLT is the meaning that flows from the reading of the treaty text in the light of its object and purpose, considering also the other elements which evidence the intention of the parties referred in paragraphs 2 and 3 of Article 31. Accordingly, the text of a treaty is the primary object of interpretation. Therefore, an interpretation which goes beyond what is expressed or necessarily implied in the actual terms of a tax treaty in order to give effect to the presumed intention of the parties would be against the textual approach underlying the provision of Article 31 of the VCLT.[558] This means that, a different understanding of the Commentary is, in my view, in contradiction of the wording and purpose of Article 24 (5). In that case such part of the Commentary should not be given any value[559] if interpreted to exclude at all the application of Article 24 (5) to tax group situations. On the contrary, it should indeed apply although considering the limitations referred to above.

These conclusions have been already properly addressed in some cases - as it will be addressed in more detail below – which inclusively dealt with the above referred amendments to the OECD Model. In *FCE Bank* case,[560] the UK First Tier Tribunal dealt with this issue considering that the focus of the discussion in the OECD commentary referred solely to the situations where one group company is resident and the other non-resident and therefore, the combined effect of the taxation of the parent and the subsidiary in those cases cannot be taken into account for the purpose of paragraph 5. A totally different situation (correctly in the author's view) is the case which involving only subsidiaries of a non-resident parent company being those subsidiaries resident in the same State. This situation is not expressly addressed in the Commentary, which suggests that this was not a concern and might be why court decisions in some countries have been considering that treaty provision allows grouping in these situations and such fact does not find any objection in the Commentary.

Similarly, the UK First Tier Tribunal took the opportunity to reinstate its reasoning in the *Felixstowe Dock* case. Also here, the UK Court correctly confirmed the application of paragraph 5 to tax groups stating that:[561]

> "We do not find this further commentary in para. 77 [of the OECD MTC] to be of any assistance in determining the issue before us. The most it tells us is that questions of treaty non-discrimination can fall to be considered in the context of domestic legislation

[558] See Frank Engelen, *Interpretation of Tax Treaties under International Law: A study of Articles 31, 32 and 33 of the Vienna Convention on the Law of Treaties and their application to tax treaties*, IBFD Doctoral Series no. 7 (2004), p. 427.

[559] Following a similar understanding about disregarding the Commentary in these situations see S. H. Goldberg and P. Glicklich, "Treaty-Based Nondiscrimination: now you see it now you don't", 1 *Florida Tax Review* 2 (November 1992), p. 72, which refer that "*the use of the OECD Commentaries to change the meaning of the otherwise plain language of a treaty is probably improper*."

[560] See *FCE Bank Plc v Revenue* & Customs [2010] UKFTT 136 (TC), 1 April 2010, paragraph 30, from judges John Avery Jones and Edward Sadler.

[561] See *Felixstowe Dock and Railway Co Ltd and others v Revenue & Customs Commissioners* [2011] UKFTT 838 (TC), 19 December 2011, paragraph 27.

> concerning transactions within, of tax treatment of, groups of companies with an element of foreign ownership. […] In any event, we would share the view expressed by the First-tier Tribunal in FCE Bank that para. 77 does no more than say that grouping of losses etc might not be claimed where one group company is resident and the other non-resident, which is a very different case from that with which we are concerned, where both the surrendering company and the claimant companies are UK resident, and so the focus is clearly on the taxation of resident companies and not on that of the non-resident parent company."

A further question about the application of the foreign ownership clause concerns a particular issue regarding the relevant comparator and the interpretation of the expression *"other similar enterprises"*. The question is no longer what are proper entities for comparison – this has already been dealt with when analysing the general features of paragraph 5 of Article 24 – but rather how the comparison should be made when applied to cases involving tax group situations. The issue arises whether the comparison should be made separately for each of the foreign-owned subsidiaries.[562] Being this the case, that would mean that the sister relationship between the subsidiaries would be disregarded case in which they would not be treated as a group. Each of the foreign owned companies would be treated separately as compared with a single domestically owned company which is also not a member of a group.

The result would be that no breach of paragraph 5 of Article 24 would exist due to the absence of any discriminatory treatment. In fact, since the comparison would never have been made with a domestic tax group situation but rather with separate companies, this would never lead to a discriminatory treatment due to the non-application of the tax group regime. Such an approach as been considered a too narrow reading of paragraph 5 as it would be placing group regime elections beyond the meaning of taxation in treaties.[563] In my view, this interpretation does not find any support either in the wording of the provision or its Commentary. It is clear the application of paragraph 5 to tax groups and, in that regard, the comparison for the purposes of *similar enterprises* should be made with domestic tax group situations.

[562] See James G. O'Brien, "The NonDiscrimination Article in Tax Treaties", *Law & Policy in International Business* 10 (1978), pp. 582-583.
[563] See James G. O'Brien, "The NonDiscrimination Article in Tax Treaties", *Law & Policy in International Business* 10 (1978), p. 583.

9.5.1 Testing the foreign ownership clause in tax group situations

9.5.1.1 Cross-border tax groups

The conclusion that paragraph 5 is indeed applicable to tax group situations leads to the subsequent analysis of whether this clause may require extending tax groups to cross-border situations.

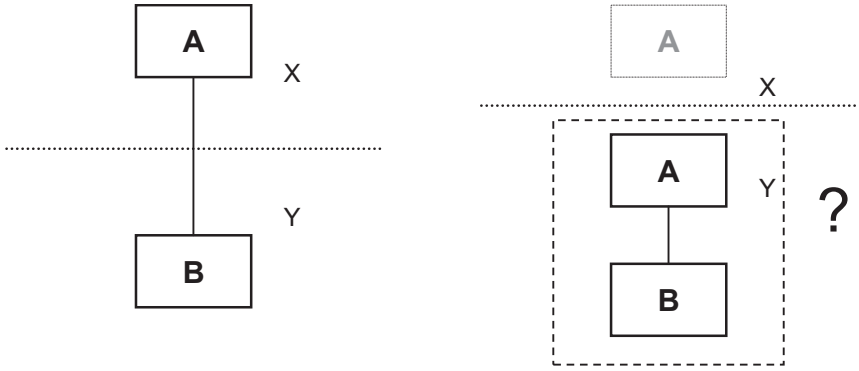

The most common example will be forming a tax group between a parent company and its subsidiary. An example may be a Company A which is incorporated and effectively managed in State X. Similarly Company B incorporated in State Y and effectively managed in that State. Company A. Under their domestic laws Company A and B are considered to be residents respectively in States X and Y. Company A is the sole shareholder of Company B and does not carry on any other activity in State Y.
Company B applied in State Y to be included in a tax group having Company A as its parent company. The tax authorities of State X deny the possibility of company A to qualify as a group member since that company is resident in another State. The question which then arises is whether it would be possible for Company B to invoke Article 24 (5) considering that if the parent company would be a resident in State Y then Company A could indeed form a group with Company B. Put differently: Is the different treatment due to the fact that Company B is controlled by a foreign company?

In this situation, the reason for discrimination does not rely essentially on the fact that Company B is foreign owned but due to the fact that Company A is not resident in State Y and thus not liable to tax therein. In other words, the real basis of the difference in treatment is the liability to tax of the recipient and not the residence of the owner. Therefore, the foreign ownership is not the decisive criterion for the different treatment. In fact, in order for Company A to be allowed to consolidate its results with Company B it would have been necessary that State Y was entitled to tax the profits (or losses) of that first company. Under the distributive rules of tax treaties, Article 7 prescribes the relevant threshold for taxation of business profits in one State of a company of the other State by requiring for the existence of a permanent establishment situated therein. As referred to, according to the

principal rule of paragraph 1 of Article 7[564], the profits of an enterprise are subject to taxation in the respective State of Residence, unless such enterprise has a permanent establishment in the other State, case in which such State may tax the profits which are attributable to such permanent establishment. The priority of business income taxation to the State of Residence under Article 7 is complemented by the rule of Article 21 which provides for the taxation in the State of Residence of any income not covered by the remaining distributive rules of a Treaty (Article 6 to 20). That is evidenced by the reference to "may only"[565] which clearly precludes the State of Source of exercising its taxing rights with the consequent exclusive allocation to the State of residence.

By applying the rules of Articles 7 and 21 of the respective tax treaty, State Y is prohibited from taking into account the income of the non-resident parent company.[566] This in itself would be sufficient to sustain the non-existence of a discriminatory treatment. As from the moment that State Y cannot tax the profits of company A, it cannot be said that company A is in substantially identical circumstances except with regard to the prohibited criteria. The factual circumstances are not the same: in a pure domestic situation, State Y can extend its taxing powers to company A whereas in a cross-border situation it cannot. And that is due to the basic difference between taxing residents and non-residents which underlies tax treaties and most of tax systems in the world. Therefore, this situation is not included within the scope of Article 24 (5). This is a natural outcome since the subject of non-discrimination is exclusively the foreign controlled enterprises and not their foreign owners. This is in fact what arises from a correct interpretation of paragraph 77 of the Commentary to Article 24 (5) of the OECD MTC:

> "[…] if the domestic tax law of one State allows a resident company to consolidate its income with that of a resident parent company, paragraph 5 cannot have the effect to force the State to allow such consolidation between a resident company and a non-resident parent company. This would require comparing the combined treatment of a resident enterprise and the non-resident enterprise that owns its capita with that of a resident enterprise and the resident that owns its capital, something that clearly goes beyond the taxation of the resident enterprise alone."

The Commentary states that the combined effect of the taxation of the parent and subsidiary cannot be taken into account by virtue of the foreign ownership non-discrimination provision. The plain wording excludes the possibility to claim the benefits of group taxation regimes where one group company is resident and the other non-resident as shown by the example of the Commentary cited above. This conclusion can already be derived from the

---

[564] For an overview see, Irene J.J. Burgers, "*Analysis of art. 7 of the OECD Model Convention: Allocation of Profits to a Permanent Establishment*", IBFD loose-leaf, 2011.

[565] See Lehner, in Vogel & Lehner, *Doppelbesteurerungsabkommen*, 5th edition, (Munich: Verlag C.H. Beck 2008), Art 21, marginal note 3.

[566] See Kees Van Raad, "Non-Discrimination under Tax Treaties regarding Groups of Companies", in G. Maisto (ed.) *International and EC Tax Aspects of Groups of Companies*, EC and International Tax Law Series, Vol. 4, IBFD (2008), pp. 160.

Commentary[567] to the 1963 OECD MTC which states that the object of paragraph 5 of Article 24:

> "Is to ensure equal treatment for taxpayers residing in the same State, and not to subject foreign capital, in the hands of the partners or shareholders, to identical treatment to that applied to domestic capital".

Therefore, within the scope of tax groups, it is relevant to determine whether the effective reason for the denial of this regime is the direct or indirect foreign ownership or rather the liability to tax of the foreign company. The proper application of this provision requires that both ownership and non-residence are present and that the combination of these two factors is the ultimate/relevant reason for the denial of the tax grouping.[568]

These conclusions are logical: in the case a controlled company would be forced to transfer its income to its parent resident company resident in another State pursuant to the application of the foreign ownership provision, that could lead (at least in some cases) to situations of double non-taxation.

That would occur because upon the recognition of the tax group in the State of the subsidiary, pursuant to the application of the foreign ownership provision it is likely that under consolidation regimes, the profits of the subsidiary in its State of residence would have to be attributed (allocated) to the foreign parent company for the purposes of allowing the consolidation.[569] From the perspective of the State of the subsidiary, the tax treaty distributive rules restrict that State's right to tax non-resident companies subject to the permanent establishment threshold in accordance with Article 7 (1) of the OECD MTC. As a consequence, that taxation of the subsidiary's profits would not be possible due the fact that the State of the subsidiary could not exercise any taxing rights over the foreign parent company as this company would not have a permanent establishment located therein and, therefore, the application of Articles 7 and 21 of the relevant tax treaty would give exclusive taxing rights to the State of residence of the parent company. In its State of residence the parent company would be subject to unlimited tax liability for its own income. But no taxation would in principle occur over the income of the subsidiary. Such company would not be within the tax jurisdiction of the State of residence of the parent company. And it is quite unlikely that the State of the foreign parent company would recognize the effects of the group taxation regime in the subsidiary's State of residence.

---

[567] See paragraph 18 to the Commentary to Article 24 of the 1963 OECD MTC currently corresponding to paragraph 76 of the same Article.

[568] John F. Avery Jones et al. "Art. 24 (5) of the OECD Model in Relation to Intra-Group Transfers of Assets and Profits and Losses", 3 *World Tax Journal* 2 (2011), p. 197.

[569] Although the mechanism is different, the same result would occur upon the group contribution system: the loss at the level of the contributing company would not be compensated by the taxation at the level of the receiving company leading to non-taxation. With regard to the group relief system, it unlikely (to say the least) that a company would simply transfer losses (with the increase of the corresponding tax base) that would not be used to offset the profits in the jurisdiction of the receiving company.

The income of the subsidiary would end up not being taxed at all.[570] The extension of domestic group taxation regimes to non-residents would then lead to a substantial loss of untaxed revenue.[571]

This non-taxation of the subsidiary is an obvious consequence of the respective domestic tax laws of that State. And such limitation would not be challenged by an applicable tax treaty as tax treaties in general restrict rather then extend taxing rights. On the whole this could lead to a double non-taxation scenario.[572] Considering this outcome it might be possible to claim a teleological reduction of the scope of application of paragraph 5 of Article 24 in such situations.[573] The argument being that as one of the purposes of tax treaties is to avoid not only double taxation but also double non-taxation, a proper interpretation of treaty provisions should, whenever possible, accommodate both those results. In fact, the 2000 OECD Model Convention amendments led to the introduction of paragraph 4 to Article 23-A 4[574] and a new interpretation of Article 23.[575] Those

---

[570] See also in this regard, the letter of the Bundesfinanzministerium in A. Rust "BMF: Discriminierungesverbite der DBA; BFH-Urt. V. 29.1.2003, I R 6/99, zu Art. 24 Abs. 4 DBA-USA", *IStR* 2005, pp. 26-27.

[571] See Hugh Ault and Jacques Sasseville, "Non-Discrimination: A Reconsideration", 2 *World Tax Journal* IBFD (2011), p. 112.

[572] See Alexander Rust, "International Tax Neutrality and Non-Discrimination – A Legal Perspective", in M. Lang et al (eds.) *Tax Treaties: Building Bridges between Law and Economics*, IBFD (2010) p. 642, conclusions of the *Bundesfinanzministerium* (German Federal Ministry of Finance) in BMF, Federal Tax Gäzette, 8 December 2004, Part I, pp. 1181-1183 and also David Francescucci et al. "Non Discrimination and Group Consolidation: The Delaware Case of the German Bundesfinanzhof and Beyond", in Raffaele Russo and Renata Fontana (eds.), *A Decade of Case Law: Essays in Honour of 10th anniversary of the Leiden Adv. LLM in International Tax Law*, IBFD 2008, pp. 144 and 151-152.

[573] See A. Rust in "Ermöglichen Diskriminierungsverbote eine Organschaft über die Grenze? - Anmerkung zum Urteil des BFH vom 29. 1. 2003", *IStR* 2003, 422, p. 661.

[574] Article 23-A 4 reads as follows:

> "The provisions of paragraph 1 shall not apply to income derived or capital owned by a resident of a Contracting State where the other Contracting State applies the provisions of this Convention to exempt such income or capital from tax or applies the provisions of paragraph 2 of Article 10 or 11 to such income."

[575] Paragraph 32.6 of the OECD Commentary to Article 23 (after the revision in 2008) sets out that:

> "The phrase "in accordance with the provisions of this Convention, may be taxed" must also be interpreted in relation to possible cases of double non-taxation that can arise under Article 23 A. Where the State of source considers that the provisions of the Convention preclude it from taxing an item of income or capital which it would otherwise have had the right to tax, the State of residence should, for purposes of applying paragraph 1 of Article 23 A, consider that the item of income may not be taxed by the State of source in accordance with the provisions of the Convention, even though the State of residence would have applied the Convention differently so as to have the right to tax that income if it had been in the position of the State of source. Thus the State of residence is not required by paragraph 1 to exempt the item of income, a result which is consistent with the basic function of Article 23 which is to eliminate double taxation."

amendments were aimed at reflecting a new purpose to tax treaties: the prevention of double non-taxation,[576] which was mentioned for the first time in the Partnership Report.[577] Therefore, the aim and purpose of tax treaties of avoiding double non-taxation could be used in order to sustain that Article 24 (5) could not be interpreted in a way that, if applied in certain cross-border group scenarios, it would give rise to such result.

This allows concluding that when the basis for the difference in treatment is the parent's liability to tax, the alleged discrimination is not prevented by the treaty provision. A different understanding would mean to provide equal treatment for foreign owners and domestic owners themselves which is something not aimed at by this provision. In addition, it would represent a derogation of a distributive rule – Article 7 – which is also clearly not intended by Article 24. A fundamental distinction in tax treaties is between residents and non-residents and subject and not-subject to tax. Tax treaties allocate taxing rights and the interpretation and application of tax treaty non-discrimination should not affect such allocation. On the contrary, paragraph 5 aims to assure that the exercise of (national) taxing powers under those distributive rules does not lead to discriminatory treatment.

A different understanding, however, was followed in a decision of the *Bundesfinanzhof* ('BFH')[578] regarding the application of the German group taxation regime – the *Organschaft*.

The case[579] involved a German subsidiary with an intermediate holding company also resident in Germany and an ultimate parent company UK resident. The German subsidiary had interest payments of some loans granted by its German parent company. According with the German rules in force at the time, 50% of those payments were added-back (therefore not deductible) for trade tax purposes. This interest deduction limitation could be avoided for companies which formed a tax (consolidation) group as in those cases transactions between parent and subsidiary are disregarded. Therefore, the taxpayer claimed that the interest deduction limitations were not applicable as it formed a tax group with its intermediate German holding company. Alternatively, an argument was made that there was a group between the parent UK company and the German intermediary company and in turn, another tax group between the intermediary company and the German subsidiary with the consequence of all companies being part of a wider group.

The BFH considered that the deduction limitation – based on the relevance of the indirect ownership of a non-resident company - constituted a breach to Article 20 (4) of the

[576] See the critical remarks of Michael Lang, IFA General Report "Double Non-Taxation", *Cahiers de Droit Fiscal International*, Vol. 89a (Deventer: Kluwer, 2004), pp. 83-86.
[577] See para. 52 of *The Application of the OECD Model Tax Convention to Partnerships* (Issues in International Taxation no. 6, OECD 1999) p. 20.
[578] Bundesfinanzhof *case I R 54,55/10, of 9 February 2011, DStR 2011, 76*.
[579] See an analysis of this case by Alexander Rust "Germany: Cross border Group Consolidation" in M. Lang et al. (eds.) *Tax Treaty Case Law around the Globe 2012* IBFD Online Books (accessed on 15 May 2015).

Germany-UK Tax Treaty (which reproduces the wording of Article 24 (5) of the OECD Model). Up to this stage, the decision[580] of the BFH would be less controversial: in fact, the limitation of the interest deductions regarding payments between two resident German companies based on the indirect foreign ownership of the subsidiary seems to be a case following in the plain wording of Article 24 (5). The residence – the liability to tax - of the UK ultimate company is irrelevant and the reason for the discriminatory treatment is the foreign ownership or control.

The most surprising element of the decision was that the BFH did not limited itself to declaring that *Organschaft* should apply for the purposes of removing the interest deduction limitations[581] but it seemed to accept all the remaining effects of the German group taxation regime, also regarding the foreign resident UK company. In that regard, the BFH ruled that a tax group did not exist between the German subsidiary and its immediate parent company because one of the requirements for the consolidation – a financial, organizational, economic and operational integration of the subsidiary into the parent company – was not met. It considered, in turn, that all of the requirements for forming a fiscal consolidation

[580] The BFH reversed a previous decision from the Hessian Federal Court which considered that no breach of the foreign ownership clause existed. The critical remark regarding the conclusions reached by this Court derive from the fact that it used an improper comparator for the purpose of analysing the real situation with an hypothetical one. In fact, this Court considered that the relevant comparison for the purposes of paragraph 4 of Article 20 of the DTC Germany/UK would require in which the shareholders of the UK company and not the UK company itself were resident in Germany. For critical comments to this decision, see Jorg Manfred Mossner, "Hessiches FG: Gewerbesteuerliche Organschaft", 19 *IStR* 2010, pp. 778-779, which correctly points out the fact that the Court decision did not focus on the core subject on whether the interest deduction could be limited purely because of the fact that the top parent company was established abroad and, in that regard, nothing seemed to go against the application of the foreign ownership provision. Rather, the focus of the Hessian Court was on the possible application of the Organschaft on a cross-border basis based on the non-discrimination clause.

[581] It is interesting to note that the BFH reached a different conclusion in a similar case. That case concerned the BFH decision in case I R 30/08, Bundesfinanzhof, 7 December 2011, following the judgment of the CJ in the *Scheuten Solar Technology* (CJ 21 July 2011, C-397/09 *Scheuten Solar Technology GmbH v Finanzamt Gelsenkirchen-Süd*). The facts involved Scheuten Solar Technology GmbH, a company established in Germany. Solar Systems BV, which was established in the Netherlands, became the sole shareholder of *Scheuten Solar* in 2003. Solar Systems had granted *Scheuten Solar* loans on which the latter paid interest during the fiscal year 2004. The tax authorities assessed the German company to business tax in 2004, not allowing 50% of the interest paid to Solar Systems to be deducted from the taxable base, making use of the add-back rule. *Scheuten Solar* considered that the full amount of the interest should be deductible – since in a purely domestic situation an established *Organschaft* would avoid the add-back - and challenged the tax authorities' decision based both on the breach of EU law as well as tax treaty non-discrimination of the DTC concluded between Germany and Netherlands in force at the time. The BFH concluded that there was violation of the tax treaty. But it explained the difference for reaching to a different outcome of its previous ruling: The (old) Germany/Netherlands tax treaty non-discrimination article did not contain a clause similar to paragraph 5 of the OECD MTC or the DTC Germany/UK. It only contained clauses covering direct discrimination of the shareholder but either of them was applicable in this case: (i) nationality, as the dispute was not a levy on the Netherlands company (even that this company was economically indirectly affected) or (ii) PE non-discrimination, because this only regards situations where the foreign company operates directly in the other State and not subsidiaries.

were fulfilled regarding the German subsidiary and its ultimate parent company except that regarding the residence of this latter company in Germany. The BFH was of the view that the residence requirement, which denied the recognition of a cross-border fiscal unity with an UK parent company, violated the foreign ownership provision of the tax treaty concluded between Germany and UK.[582] According to the BFH, the fact was that the German subsidiary was subject to a different treatment with respect to trade than that to which it would be subject if it were not controlled by a UK company but rather by a company resident in Germany. Therefore, it concluded that given the facts and circumstances of the case, the foreign ownership provision was applicable because there was a different tax treatment by reason of the residence of the parent company, which is the relevant differentiating characteristic protected by such provision.

The application of the consolidation would then mean that the subsidiary would be treated as PE of its ultimate parent company, only this latter company would be considered as taxpayer. The German tax authorities argued that extending the application of the *Organschaft* would lead to double non-taxation,[583] which could not be the purpose of the non-discrimination clause. The BFH was not persuaded by those arguments. It started by observing that the issues regarding attribution of income refer solely to the domestic laws of the States and are not dealt with in the applicable tax treaty. It considered in addition that (and although under German domestic law the subsidiary was treated as a notional PE) the impossibility to tax the income was due to the agreed allocation of taxing rights, in particular, the combined application of Articles 7 (1) and 5 (7) of the treaty which forbids the taxation of the parent company income in Germany. Finally, it stated that the cross-border consolidation could not *a priori* be excluded from the scope of the foreign ownership provision based on a teleological reduction of its scope, even if leading to double non-taxation. The outcome of the decision seems to give rise to the application of group taxation on a cross-border situation triggered by a non-discrimination provision. If, under a pure domestic situation and through the application of the German consolidated rules, a controlled company would be assimilated to a permanent establishment and allowed to pass on its income to its domestic parent company, the same should apply in a cross-basis. In other words, the German subsidiary would in similar terms be a notional permanent establishment and also be entitled to pass the income to its parent resident company resident in the other State. The BFH recognized[584] that the application of the group taxation regime on a cross-border basis could lead to erosion of the tax base due to the non-existence of jurisdiction over the tax base of the foreign company. But that was because of the sharing of taxing rights under the applicable tax treaty. Therefore, it concluded that the rules on

[582] It is clear that the non-discrimination article was also applicable to trade tax by virtue of the last clause of this provision which extends its application to taxes of every kind and description.
[583] This would be due to the fact that: the income of the subsidiary would be attributed to the parent company which would not be liable to tax in Germany which, in any event, could tax such company pursuant to the application of Article 7 (1) of the tax treaty. From the UK perspective, the parent company would not recognize the income attribution of its subsidiary.
[584] See para. 21 of the Bundesfinanzhof decision on *case I R 54,55/10, of 9 February 2011, DStR 2011, 76*.

group taxation might be extended to situations involving foreign parent companies based on the foreign ownership provision unless there was a specific exclusion[585] in the tax treaty.

This decision and its reasoning is difficult to follow. As a general comment and as previously referred to, holding the view that the foreign ownership clause may apply to cross-border situations in which two different tax jurisdictions are involved should be rejected.[586] Tax Treaties draw a fundamental differentiation between residents and non-residents. Extending the scope of the non-discrimination clause to a situation such as the one dealt by the BFH in this case would deprive such differentiation of all meaning. In addition and dealing in more detail with the arguments submitted by the BFH, the following remarks can be made.

First of all the interpretation made by the BFH regarding Article 5 (7). This Court rejects the existence of the PE because the wording of this clause states that a subsidiary cannot *of itself* constitute a PE due to the existence of control by its parent company. While the meaning of the expression *of itself* is unclear,[587] the wording of paragraph 7 of Article 5 confirms that treating a subsidiary as a PE is an exception and therefore, should be subject to a narrow interpretation. This provision requires the re-characterization of the subsidiary as a branch from a functional point of view – the existence of dependence – and, in general, tax consolidation rules lead to a subsidiary being treated as a branch apply *ipso jure*, through a rule which, for tax purposes, deems that all the companies constitute actually one single taxpayer, with no relevance being given to factual dependence. But the fact is that consolidation under the *Organschaft* involves more than mere control as it requires financial, organizational, economic and operational integration. Therefore, it is arguable that the subsidiary does indeed constitute a PE of its parent company for the purposes of paragraph 7 of Article 5[588] as it may indeed involve factual dependence.

In addition, the argument used by the Court based on Article 7 (1) confirms that the reason for the difference in treatment is residence rather than the foreign ownership of the parent company. In fact, the possible erosion of the German tax base is due to the fact that Germany cannot take the income of the parent company into account. In other words, it cannot extend its jurisdiction to the non-resident UK company. That, by itself, would make it impossible to apply one of the main characteristics of the *Organschaft*, which is the

[585] As the one provided in Protocol 21 of the 2006 Tax Treaty Germany/US.
[586] See John F. Avery Jones et al. "Art. 24 (5) of the OECD Model in Relation to Intra-Group Transfers of Assets and Profits and Losses", 3 *World Tax Journal* 2 IBFD (2011), p. 555.
[587] See for a discussion, Jean Pierre Le Gall, "Can a Subsidiary Be a Permanent Establishment of its Foreign Parent? - Commentary on Article 5, par. 7 of the OECD Model Tax Convention", 60 *Tax Law Review* (2006-2007), pp. 179-213.
[588] See, *inter alia*, Alexander Rust "Germany: Cross border Group Consolidation" in M. Lang et al. (eds.) *Tax Treaty Case Law around the Globe 2012* IBFD Online Books (accessed on 15 May 2015), Jürgen Lüdicke in the comments to case I R 54, 55/10, Bundesfinanzhof, 9 February 2011, 13 *International Tax Law Reports*, p. 847 or Jörg Manfred Mössner, "Änmerkung zum Urteil des Bunderfinanzhofs", *IStR* (2011) p. 700.

offsetting of losses with profits, since the profits of the foreign subsidiary cannot be taken into account in Germany. That by itself would be sufficient to demonstrate the non-existence of similarity of factual circumstances and consequently, that one of the requirements for triggering the application of the foreign ownership provision was not met in this case. In fact, the application of the non-discrimination clause in this situation leads most likely – as recognized by the BFH - to the result that the subsidiary company would not be taxed at all: from the perspective of the State of the parent company (UK) this State would not recognize the attribution if income performed according with the State of the subsidiary (Germany). And this latter State would be, as said, precluded from taxing the profits of the parent company by virtue of Article 7 (1) of the treaty.

Considering the inclusion of double non-taxation[589] as being within the scope of tax treaties, that would require a teleological reduction of the non-discrimination provision.
Therefore, the BFH appears to have focused on the wording of the non-discrimination clause[590], disregarding the object and purpose of the treaty, which are relevant elements for treaty interpretation pursuant to Article 31 (1) of the Vienna Convention on the Law of Treaties. The purpose of the non-discrimination article is not to achieve double non-taxation.[591] The fact that the BFH did not made reference either to the double non-taxation argument (introduced with the amendments to the OECD MTC Commentary in 2000) or to the rejection of cross-border group taxation (introduced with the amendments to paragraph 5 of the OECD MTC Commentary in 2008) may be due to the fact that it followed its traditional approach of following a static interpretation considering irrelevant the use of the subsequent amendments to the Commentary regarding the application of the foreign ownership provision to group consolidation since this case referred to the application of the 1964/1970 Germany/US tax treaty.

Ultimately, the BFH decision should have limited its practical effects of the cross-border application of the group taxation regime to one particular feature: avoid the interest deduction limitations. The benefit of full deduction of the interest (and other payments) is unrelated to the income attribution to the parent company. The German legislation would be contravening the tax treaty on-discrimination foreign ownership provision in this particular aspect. Accepting such a limited effect would have allowed a more proper and balanced application of tax treaties implying the adoption by the BFH of a "per-element

[589] See Jörg Manfred Mössner, "Gewerbesteuerliche Organschaft zwischen einem in Grossbritannien ansassigen Organtrager und einer inlandischen Organgesellchaft uber eine inlandische Zwischenholding", *IStR* (2011), pp. 348.
[590] The BFH made reference to the "absolute effectiveness" of the non-discrimination clause. See Jürgen Lüdicke in the comments to case I R 54, 55/10, Bundesfinanzhof, 9 February 2011, 13 *International Tax Law Reports*, p. 844.
[591] See in this regard, Wolfgang Mitschke, "Keine Disrkiminierung nach Art. XX Abs. 4 DBA-Grossbritannien in Fallen auslanderbeherrschter Inlandskapitalgesellschaften, *IStR* 2011, pp. 537-542.

approach"[592]: that is, only one benefit of the group taxation regime applies on a cross-border basis and not all the related effects.[593]

On the whole, this decision illustrates the conclusions that were previously submitted about the scope of paragraph of 5 in cross-border situations: its application should be restricted to effects within a taxing jurisdiction.[594] The effect of this clause cannot be the extension of group taxation regimes to cross-border situations.[595] Otherwise the difference in treatment is the liability to tax of the parent company and that is not a discriminatory factor targeted by this provision. The starting point for the application of tax treaty allocation rules in a cross-border group situation is the fact that under the domestic laws of a particular Member State the income of a foreign company is, in a certain way, allocated to a domestic parent company. In other words, the domestic laws of that Member State already provide for a certain form of cross-border group taxation and one is merely interpreting which tax treaty provisions apply in such situation. It is not possible to extend the scope of tax treaties to group taxation situations merely by applying the allocation rules of tax treaties where parent and a subsidiary are resident in two different States. Such understanding does not find any support based on an interpretation of the tax treaty provisions.

This understanding was properly addressed by the *Hoge Raad,*[596] which clearly rejected that invoking the foreign ownership provision could allow cross-border consolidation. The case dealt with the Netherlands thin cap rules. A Netherlands company had different interest payments concerning loan arrangements with both its French parent company, a Portuguese subsidiary and a German sister company. The deductions related to the interest paid by the Netherlands company to the related foreign companies were rejected. The taxpayer claimed, *inter alia*, that regarding the interest payments made to its parent

[592] As referred by Lüdicke, part of the German literature agreed with the BFH that the denial of all aspects of the trade tax fiscal unity regime was in breach of the non-discrimination provision while at the same time considering that removing the discriminatory treatment claimed by the taxpayer – the interest deduction limitations – should not involve providing all the effects of a cross-border trade tax fiscal unity. See Jürgen Lüdicke in comments to case I R 54, 55/10, Bundesfinanzhof, 9 February 2011, 13 *International Tax Law Reports*, p. 844.

[593] For an analysis of applying a per-element approach within the scope of the non-discrimination provision in tax treaties, see 9.4 *infra*.

[594] See, John F. Avery Jones et al., "Art. 24 (5) of the OECD Model in Relation to Intra-Group Transfers of Assets and Profits and Losses", 3 *World Tax Journal* June (IBFD) 2011, p. 210, footnote 131.

[595] This conclusion is unaffected by the factual situation of a possible cross-border situation. Even in the situation in which a foreign parent company has incurred (final) losses and has a profitable subsidiary, while the possible income tax consolidation would unarguably lead to a overall lower tax base of the group and the subsidiary in particular, such situation clearly goes beyond the scope of Art. 24 (5). From the perspective of the parent company, paragraph 5 does not protect outbound situations so the parent company cannot claim being within the scope of this clause. From the perspective of the subsidiary, the reason for the discriminatory treatment is not only the fact that the subsidiary is owned by a foreign company but essentially because that foreign company is not resident in the same State as the subsidiary, i.e. the fact that the parent company is not liable to tax in that State.

[596] *Hoge Raad*, case no. 10/05268, of 21 September 2012, *VN 2012/47.14*.

company located in France, there was a breach of the foreign ownership provision pursuant to Article 25 (5) of the DTT France/Netherlands. According to the Netherlands tax rules, in general, both interest deductions paid to residents and non-resident shareholders are subject to Netherlands thin cap regulations. The situation differs only within the scope of the fiscal unity in which there are no interest deduction limitations, essentially due to the fact that the transactions within the group are disregarded for tax purposes. In such case indeed foreign parent companies are not allowed to be part of the group. The Netherlands Supreme Court correctly considered that that the purpose of the foreign ownership provision cannot be interpreted in order to extend the fiscal unity to cross-border situations. Relying on the construction of the comparator for the purposes of paragraph 5, it concluded that there was no discrimination in this case since domestic and foreign shareholders were, in principle, subject to the same tax treatment and that for the purposes of the fiscal unity, a domestic parent company with a foreign parent company were not comparable as in this latter case the company was not within the tax jurisdiction of the Netherlands. The *Hoge Raad,* following the opinion of AG Wattel,[597] relied not only in the 2008 amendments to the Commentary referred to above which exclude cross-border consolidation through the combination of the results of both parent and subsidiary, but by observing that it would be extremely unlikely that the purpose of the foreign ownership clause in the tax treaty would allow such cross-border effect. In that regard, a remark was made that already from the previously quoted passage from the 1963 OECD MTC Commentary it was evident that the treatment of the foreign shareholder was entirely beyond the scope of paragraph 5 and only the treatment of the domestic subsidiary was covered by such a provision.

9.5.1.2. Dual residence situations

Some different interesting issues may arise when dealing with the scenario of dual resident companies in the case of a parent company with place of incorporation in one State but effectively managed in the same State of its subsidiary.

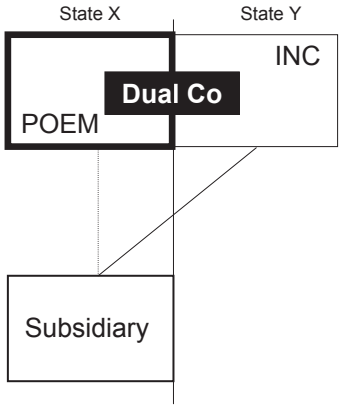

[597] AG Wattel Opinion, case no. 10/05268, of 21 September 2012, *VN 2012/6.13*.

A good example may be found in a 2003 decision of the *Bundesfinanzhof*.[598]
A German resident subsidiary was owned by a corporation incorporated in the US (Delaware) but effectively managed also in Germany. Both the German subsidiary and its parent company entered into an *Organschaft* agreement under which both entities agreed to form a fiscal unity. The tax authorities denied the claim for tax grouping based on the fact that the conditions for the fiscal unity had not been fulfilled. In particular, the US company, although being a German resident for tax purposes in accordance with the respective domestic laws, could only enter into a fiscal unity agreement if its statutory seat was also located in Germany. The taxpayer (the German subsidiary) appealed against this decision based on the breach of Article 24 (4) of the DTC US/Germany (1989) which replicates the paragraph 5 of the same provision of the OECD Model Convention.

The BFH reversed the decision of the Lower Tax Court and considered that by virtue of the non-discrimination clause of Article 24 (4) of the DTC US/Germany, the Delaware corporation could indeed enter into a fiscal unity agreement with its German subsidiary, therefore, disregarding the statutory seat requirement for entering into a fiscal unity provided in the German legislation. The case is relevant not only because of the decision itself but also because of the relevance of its reasoning. In particular, it gives rise to an interesting question of what is the relevance of residence of the foreign parent company for the purposes of applying Article 24 (5)? In other words, the issue is whether it is necessary to determine the relevant residence of the parent company for the purposes of Article 24 (5) when in the presence of a dual-residence company. This question is related to the broader subject concerning dual resident persons and whether the tie-breaker rule needs to be applied where it is not the residence of the taxpayer itself which is at stake but rather the residence of another person related to it.[599]

In the *Delaware* case, the company was incorporated in the US – consequently a tax resident in accordance with its domestic laws, - but it was effectively managed in Germany and therefore resident for tax purposes therein. Under the tie-breaker rule of Article 4 (3) of the DTC US/Germany dual residence should be solved by the Mutual Agreement Procedure ("MAP") and, if no agreement is reached, the person shall not be considered to be a resident of either Contracting State for the purposes of enjoying the benefits of the respective DTC.[600] The BFH considered that it was not relevant to determine the treaty residence of

[598] Delaware case, *Bundesfinanzhof* case I R 6/99, of 29 January 2003, 6 ITLR 318-335.
[599] There is an on-going debate, for instance, regarding Article 15 (2) (b) of the OECD MTC and whether it is necessary to determine the relevant tax treaty residence of the employer in the case of dual residence. See, inter alia, Luís Eduardo Schoueri, "The Residence of the Employer in the "183-day Clause" (Article 15 of the OECD's Model Double Taxation Convention)", *Intertax* 1 (1993), pp. 20-29, Luc de Broe et al, "Interpretation of Article 15(2)(b) of the OECD Model Convention: "Remuneration Paid by, or on Behalf of, an Employer Who is not a Resident of the Other State" Bulletin – Tax Treaty Monitor, 10 (2000), IBFD, pp. 515-516, F. Pötgens, "Article 15 (2) (b) of the OECD Model: Problems Arising from the Residence Requirement for Certain Types of Employers", *European Taxation* 6/7 (2002) IBFD, pp. 220-226.
[600] It states that:

the parent company for the purposes of Article 24 (4). In that regard it relied on the fact that:

a) Article 4 (3) DTC US/Germany limits its effects for the situations of "enjoying benefits under this Convention". That would mean that such provision would only be relevant for the purposes of determining the relevance treaty residence of the persons which are claiming the tax treaty benefits – in this case the German subsidiary - and not for other dual-residence persons as the case of the Delaware company.[601]
b) The fact that the application of Article 4 (3) could trigger a situation where the parent company would not be resident in either State could even contribute to a narrow interpretation of this provision[602] which would then only be relevant whenever the distributive rules would require the determination of the relevant tax treaty residence
c) Article 24 (1) can be applied to persons which are not residents of one or both the Contracting States
d) Article 24 (6) determines that the non-discrimination clauses apply to taxes of every kind a description even in cases (e.g. VAT) which are not dependent on the residence of the taxpayer.

Some remarks should be mentioned regarding the above arguments. Concerning the BFH reasoning in c. and d. above, I believe that the reasoning used by The BFH concerning paragraphs 1 and 6 of Article 24 are not relevant to the case. Indeed paragraph 1 applies to persons who are not residents of either Contracting States but that is because the forbidden discrimination under such paragraph is based on nationality, a subject totally different from the situation dealt with under this case where residence of the parent company was crucial. A similar reasoning applies regarding paragraph 6: some taxes are not dependent on the residence of the taxpayer but in the case one is dealing with income taxation which relies on the fundamental residence/non-residence dichotomy. With this, it is not excluded that it could be appropriate to rely on the nationality non-discrimination clause. This clause

---

"Where by reason of the provisions of paragraph 1 a person other than an individual is a resident of both Contracting States, then the competent authorities of the Contracting States shall seek to determine through consultation the Contracting State of which the person shall be deemed to be resident for the purposes of this Convention, and, if they are unable so to determine, such person shall not be considered to be a resident of either Contracting State <u>for purposes of enjoying benefits under this Convention</u>." (underscore BdS)

[601] That would be combined with the fact that Article 24 (4) DTC US/Germany required ownership or control by a person resident in the other Contracting State (in case the USA). The actual residence which is meant there is under Article 4 (1) and not Article 4 (3) because the protection granted by paragraph 4 refers to the liability of the subsidiary and not the dual resident parent company.

[602] See David Francescucci et all "Non Discrimination and Group Consolidation: The Delaware Case of the German Bundesfinanzhof and Beyond", in Raffaele Russo and Renata Fontana (eds.), "*A Decade of Case Law: Essays in Honour of 10th anniversary of the Leiden Adv. LLM in International Tax Law*", IBFD 2008, p. 140.

prohibits one State from subjecting nationals of the other State to other or more burdensome taxation and connected requirements where both nationals are in the same circumstances. In this case, the parent company was a US national - due to incorporation - with (dual) residence in Germany due to its place of effective management there. Therefore, it could be considered to be in the same circumstances (in particular with regard to residence) for the purposes of applying the nationality non-discrimination clause. The BFH was unclear in its decision. Although recognizing the possibility to invoke this clause, it made reference to it from the perspective of the taxpayer. That is also not immediately apprehensible, as the subsidiary suffered no discrimination based on nationality. In all events, the BFH considered it unnecessary to determine if Article 24 (1) was applicable in this decision because the taxpayer could rely on the foreign ownership non-discrimination clause.

This clause deals with discrimination affecting enterprises of one State which are foreign owned by residents of the other State. Thus, the reason for discrimination must be due to the foreign ownership by one (or more) residents of a different State. In this case, the shareholder was a dual resident company. The BFH found it unnecessary to determine the relevant residence for treaty purposes. For the purposes of the foreign ownership non-discrimination provision it was sufficient that the parent company was resident in the U.S. pursuant to its domestic law. It considered that the tie-breaker rules are only relevant to determine the residence of the taxpayer which is claiming treaty benefits. The arguments of the BFH to justify the irrelevance of determining the relevant residence of the parent company can, in my view, only be understood if one considers the specific wording of the tie-breaker rule of the DTC US/Germany and in particular, the final part of the sentence which is worded: *for purposes of enjoying benefits under this Convention.*

As a general principle and for the tax treaties with a tie-breaker rule modelled under the OECD MTC, this reasoning is less clear.[603] Residence is not merely a condition for the entitlement to treaty benefits pursuant to Articles 1 and 4. The concept of residence is used for different purposes.[604] The application of the treaty's distributive rules is based on the allocation of taxing powers between the residence state and the source state. Determining the relevant residence for treaty purposes is crucial in order for the allocation rules to apply properly.[605] Therefore, for the purposes of applying paragraph 5, it should also be necessary to determine the relevant treaty residence of the parent company in the case this one is a dual resident. This derives also from the clear wording of Article 4 (3) which applies to situations where a person is resident of both Contracting States, which means that Article 4 (and not only paragraph 1) should be applied in its entirety and not be limited to

[603] In favour that the tie-breaker rule applies only for the taxpayer claiming the treaty benefits (at least in the context of Article 15 (2) (b) OECD MTC), see R. Prokisch in Vogel/Lehrer *Doppelbesteuerungsabkommen*, 5 (2008), paragraph 53d or Luís Eduardo Schoueri, "The Residence of the Employer in the '183-Day Clause' (Article 15 of the OECD's Model Double Taxation Convention), 20 *Intertax* 1(1993), pp. 25-27.
[604] See, *inter alia*, Michael Lang, *Introduction to the Law of Double Tax Conventions*, IBFD/Linde (2010), p. 77 or R. Couzin, *Corporate Residence and International Taxation*, Online Books IBFD (2002), p. 124.
[605] See Michael Lang, *Introduction to the Law of Double Tax Conventions*, IBFD/Linde (2010), p. 77.

apply only to residence conflicts with respect to the taxpayer in question (in this case, the subsidiary).[606] In this case, determining the relevant residence of the parent company was a necessity for the application of paragraph 5 and the extension of the group taxation regime. In fact, determining the relevant residence could imply that paragraph 5 should not apply at all, as the different treatment was not due to the foreign ownership but due to the (foreign) residence of the parent company.

9.5.1.3. Parent company with subsidiary resident in the same State and with an intermediary foreign link

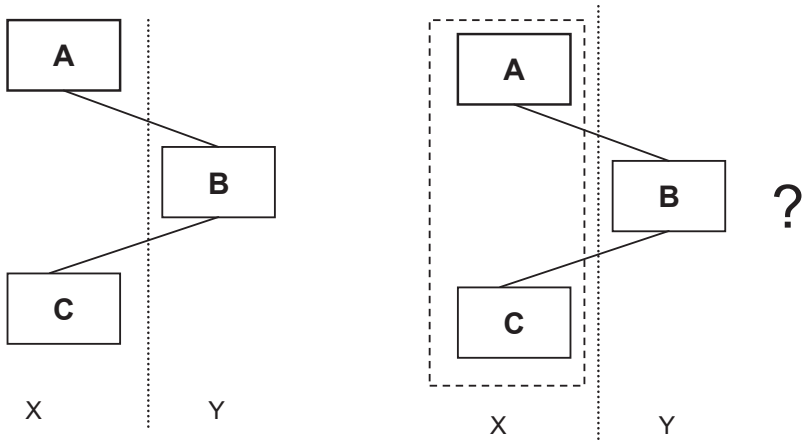

In this scenario, the purpose is to analyse whether paragraph 5 of Article 24 would be applicable or not in order to extend the group taxation benefits to the top parent company and the lower tier subsidiary when an intermediary company is located in a different State.

It is considered first that a company (A) resident in Contracting State X holds a subsidiary (B) resident in Contracting State Y which in turn holds a sub-subsidiary (C) also resident in State X (so-called "*sandwich situation*"). All the companies meet the requirements for electing to form a tax group in Contracting State X, except for the fact that the subsidiary B is not a resident for tax purposes in such State. In that case, State X does not allow forming a tax group with either subsidiary B or subsidiary C, whereas if B was a resident company in that State, all companies would qualify for a tax group election.

A similar situation was decided by the Swedish Supreme Administrative Court[607] in case *Ref 91 I*. This case concerned a Swedish parent company that held a subsidiary through an

[606] See in this regard, "Luc de Broe at al, "Interpretation of Article 15(2)(b) of the OECD Model Convention: "Remuneration Paid by, or on Behalf of, an Employer Who is not a Resident of the Other State" Bulletin – Tax Treaty Monitor, 10 (2000), IBFD, pp. 515-516 or Frank Pötgens, *Income from International Private Employment*, IBFD Doctoral Series 12 (2006), pp. 755-756.

[607] *Regeringsratten, 26 November 1993 ref 91 I*. See for comments, Kristina Stahl, "The Application of the Treaty Non-discrimination Principle in Sweden", 28 *Intertax* 5 (2000) Kluwer Law International, p. 198,

intermediary company located in the United States. Based on the group contribution system, the Swedish parent intended to give a contribution to its Swedish second-tier subsidiary. The deduction of the paid contribution at the level of the parent company, however, was denied due to the fact that the intermediary holding company was not a company resident in Sweden. A claim was made that such denial would breach the non-discrimination foreign ownership provision.[608] Two issues deserve attention regarding this case. First and foremost because it is a clear example of application of the paragraph 5 of Article 24 to groups in the case of sandwich situations. Second, because the Swedish Court followed the interpretation we have previously sustained, that the requirement *other or more burdensome taxation* does not imply the payment of more tax. In this situation, the company arguing discriminatory treatment was the sub-subsidiary that benefited from a group contribution. But the tax deduction occurred at the level of the top parent company which, in fact, was the one directly affected by the discrimination. Therefore, the denial of the group contribution did not have anything to do with the ownership of the contributing (parent) company but rather with the fact that the beneficiary was a sub-subsidiary owned by an intermediary foreign company. This means that looking from the opposite perspective, the receiving company claiming protection under paragraph 5 was not directly suffering a disadvantage since it was not being denied any deduction and therefore, was not being subjected to a more burdensome taxation as a consequence of the denial of the group contribution system. The Court made a correct interpretation, considering that the position of the Swedish subsidiaries had also to be considered. In that regard, the term "other" taxation means not only more burdensome taxation but also any taxation or requirements other than the ones applicable in a pure domestic scenario.

Similarly, in Finland, the Supreme Administrative Court confirmed that the foreign ownership provision requires applying the group contribution regime benefits between two Finish companies where the sub-subsidiary is held through an intermediary holding company with which Finland has concluded a Tax Treaty.[609]

Bertil Wiman, IFA Sweden Report, "Group Taxation", *Cahiers de droit fiscal international*, Vol. 89b, (2004), pp. 646-647 and Anders Erasmie, IFA Sweden Report "Non-discrimination at the crossroads of international taxation", *Cahiers de droit fiscal international*, Vol. 93a, (2008), p. 576.

[608] The DTC Sweden/US in force at the time did not contain a provision similar to Article 24 (5) of the OECD MTC. In that regard, the claimant relied on Article 10 (3) of Tax Treaty US/Sweden on estates, inheritances and gifts of 13 June 1983 which contained wording similar to paragraph 5 of Article 24 of the OECD MTC and was applicable by virtue of Article 10 (4) of the said treaty which extended its application to taxes of every kind and description.

[609] *Cases no. 536 and 537 of 18 February 1992*. The first case concerned a Finish parent company with a sub-subsidiary which was owned by a Netherlands intermediary company and involved the application of Article 26 (4) of the DTC Finland/Netherlands. The second concerned a similar structure but the intermediary company was resident in Sweden and involved the application of Article 27 (4) of the Multilateral Nordic Treaty. In both cases, the provisions were identical to paragraph 5 of Article 24 of the OECD Model. See on these cases, Seppo Penttilä, IFA Report Finland "Non-discrimination at the crossroads of international taxation", *Cahiers de droit fiscal international* Vol. 93a (2008).

The same solution would apply in the case the sub-subsidiary is controlled by multiple foreign shareholders, for example, in the situation of foreign parent company with two subsidiaries (sister companies) which, in turn, hold one sub-subsidiary resident in the same State of the parent company.

In fact and if both the intermediary sister subsidiaries (B and C) are resident in the same different State of the other companies of the group, the situation fits within the plain wording of paragraph 5 of Article 24, which refers to direct or indirect ownership or control of one or more residents of the other contracting State.

9.5.1.4 Foreign parent company with two subsidiaries (sister companies) in another State

It is considered in this situation that a company (A) resident in Contracting State X holds two subsidiaries (sister companies B and C) both resident in Contracting State Y. All the companies meet the requirements for electing to form a tax group in Contracting State Y, except for the fact that the parent company A is not a resident for tax purposes in such State Y.

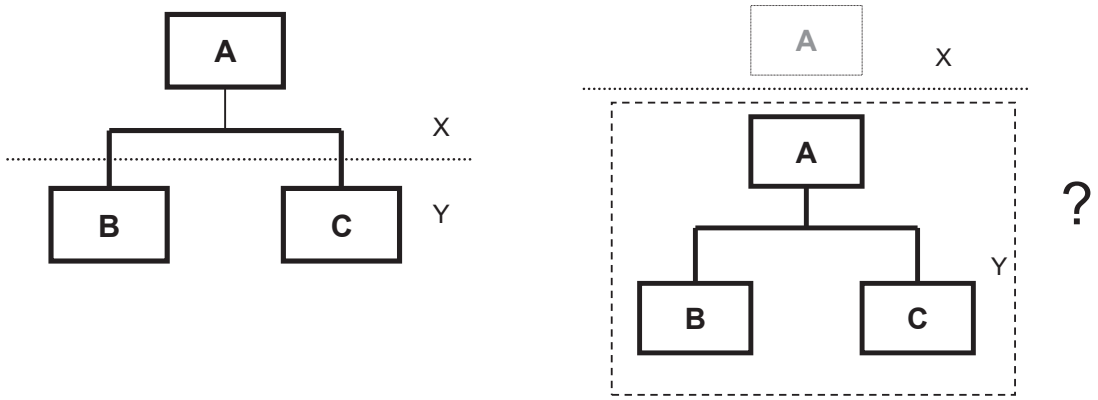

It is first assumed that the group taxation model in force in Y is either *group relief* or a *group contribution scheme*. Therefore, company C intends to transfer a loss (under the group relief system) / profit (based on the group contribution system) to company B. The tax authorities of State Y deny any such possibility since A is not a resident therein and in accordance with the applicable legislation, group members have to be resident for tax purposes in that State.
The alleged discrimination is then the inability of one of the subsidiaries to claim group relief or make a group contribution to another subsidiary which is resident in the same State. It is important to stress that, unlike in situation 1 above, the group relief/group contribution claim involves two subsidiaries resident in the same State. There is no involvement of the parent company. In addition, if the holding company had been resident in the same State as the subsidiaries (State Y) the group relief/group contribution would have been possible. The question to be addressed based on paragraph 5 of Article 24 of the

OECD Model is then whether the inability to claim the tax group benefits is the foreign ownership or something else.

It must me emphasised that, in this situation, the only reason for the difference in treatment between a pure domestic situation (all companies resident in State Y) and a situation with a cross-border element is that both B and C are owned by a resident company of another State.

Therefore, the situation falls within the scope of paragraph 5 of Article 24 due to the fact that the denial of the group relief or group contribution systems between the two subsidiaries is based not on the fact that the parent company is not liable to tax in the same State as the subsidiaries (State Y) but solely because those subsidiaries have a foreign parent company. The irrelevance of the residence of the parent company in these scenarios derives from the fact that only the tax bases of the subsidiaries B and C are affected by the loss relief or contribution. In that regard, since both are resident in the same State, the integrity of the tax bases and the symmetry associated with the application of these tax group regimes rules are preserved. The only reason for the difference in treatment is the non-resident status of the parent company. Contrary to the situation previously described in the *NEC* case where the non-resident company was a party to the transaction, that is not the case under this scenario. The status of the parent company of being within the taxation scope of the State where the subsidiaries are located is immaterial to whether the two subsidiaries resident in the same State can form a group which allows them the surrender of losses or an intragroup transfer between themselves.

A similar situation involving the group relief system was scrutinized in the UK case, *FCE Bank.*[610] The case involved two UK resident companies (FCE and FCML) which were held directly for 75% by a US resident company. FCE claimed group relief in respect of the losses surrendered by its sister company, FMCL. The HMRC refused that claim on the grounds that the UK subsidiaries did not have a common parent UK company, as required at the time in Section 413 (5) of the Income and Corporation Taxes Act of 1988. FCE filed a claim based on Article 24 (5) of the 1975 US/UK Double Tax Convention due to the fact that it could not offset its profits against the losses surrendered by FMCL. Such situation led to a more burdensome taxation than the one that would have been available had the parent company been a UK resident.
The UK Tribunals, correctly, reached the conclusion[611] that in that case, the different treatment arose because the direct holding of the company was located in the United States rather then the UK. There was no ground, other than the (foreign) ownership, for the different treatment. And the impossibility to make a group relief based on that ground was

[610] The decision was first delivered by the UK First Tier Tribunal in *FCE Bank plc v Revenue and Customs Commissioners* [2010] UKFTT 136 (TC), 1 April 2010, 12 *ITLR* 962 and later confirmed by the Upper Tribunal [2011] UKUT 420 (TCC), 13 October 2011, 14 *ITLR* pp. 319-332.
[611] See *FCE Bank plc v Revenue and Customs Commissioners* [2010] UKFTT 136 (TC), 1 April 2010, 12 ITLR, paras. 19 to 22.

in breach of the Double Tax Convention US/UK since it was the discrimination prevented by the plain wording of Article 24 (5). The Upper Tribunal very clearly stated[612] that:

> "(…) the claim for group relief was a claim that only affected the UK tax position of the two UK subsidiaries. The claim had no effect at all on the tax position of the US parent, and the only reference of the parent company was to establish (or not, as the case may be) the necessary group relationship between the two UK companies which surrendered and accepted the trading losses. It is conceptually quite irrelevant whether the US common parent is within the charge to UK corporation or not in relation to the question of whether two UL tax-resident companies are sufficiently connected to each other so as to form a group which permits the surrender of losses from one to another."

Subsequently, the UK Courts were again confronted with a somewhat similar issue in the case *Felixstowe Dock.*[613] The facts of the case were as follows: Hutchison Whampoa is a worldwide group of companies headed by Hutchison Whampoa Limited, a Hong Kong resident company. Some of the UK subsidiaries of the group ("The Claimants") claimed for group relief in respect of losses made by one member of the group, Hutchison 3G UK Limited ("the Surrendering company"). At the time the Surrendering company was owned by a consortium of companies through the intermediate holding company, Hutchison 3G UK Investment Sarl, a company resident in Luxembourg. Under the applicable UK domestic law, in order for the group relief to be available a link company must exist, which, in this case is Hutchison 3G UK Investment Sarl. It is further required, according to the relevant legislation, that the link company is itself able to claim relief. For that purpose, the condition is that this link company is a UK resident or is a non-resident with a UK permanent establishment. Since this requirement was not met in the case of Hutchison 3G UK Investment Sarl, the surrender of the losses by the Surrendering company was rejected by the HMRC. The claimants argued that such requirement was inconsistent, notably with Article 24 (5) of the Double Tax Treaty concluded between UK and Luxembourg.

The UK FTT confirmed the taxpayer claim that the UK legislation indeed violated the foreign ownership clause of the applicable tax treaty.
One of the most interesting points in this case is the reference to the *requirement of discriminatory treatment* and the meaning of the words "*other or more burdensome taxation or connected requirements*". I recall that in this case, it was the Surrendering company rather than the claimant that argued the discriminatory treatment due to the link

[612] See *FCE Bank plc v Revenue and Customs Commissioners* Tribunal [2011] UKUT 420 (TCC), 13 October 2011, 14 *ITLR* para. 19. For a description see Alison Last, "FCE Bank Plc: Group Relief in reliance on a provision in a Double Taxation Convention (Court of Appeal) " *Highlights & Insights on European Taxation* 2013/2.2 or Brian Cleave "FCE Bank plc v HMRC: applying Boake Allen to group relief", *British Tax Review* 2 (2013), pp. 126-131.

[613] See *Felixstowe Dock and Railway Co Ltd and others v Revenue & Customs Commissioners* [2011] UKFTT 838 (TC), 19 December 2011. For a detailed analysis of this case, see Bruno da Silva, "Felixstowe Dock and Railway Company Ltd. & Ors v Revenue & Customs: UK group relief: Non Discrimination in Tax Treaties and EU Law", *Highlights & Insights on European Taxation* 2013/2.1. For the EU law analysis, see 13.2.3 and 14.2.1.4 *infra*.

company being a Luxembourg resident. This means that the denial of the group relief did not need to lead to a direct disadvantage of the company arguing the discriminatory treatment since this company, upon the surrender of its losses, could actually end up having to pay taxes sooner than in the case of not transferring those losses as it could carry them forward for future years.

The taxpayer argued that the inability of the Surrendering company to surrender its losses constituted both: (i) other or more burdensome taxation, and (ii) any requirement connected therewith which was also other or more burdensome. The HMRC took the opposite view following a particularly narrow approach arguing that the surrendering company itself had not been subject to taxation. It considered that the inability to surrender losses could in any event be considered as "taxation" to which such company is subject. Similarly, the HMRC considered that the reference to other requirements must be connected to taxation. Since the inability of relief could not be considered taxation, it could also not be understood as a requirement connected with taxation. More simply: the interpretation of the UK revenue of the discriminatory treatment targeted under paragraph 5 was that it does not comprise a mere different treatment but only a different taxation or other requirements connected therewith. Disallowing loss relief could in any event mean that the Surrendering company was subject to taxation. In addition, it interpreted the expression *requirements* as referring to obligations rather than mere opportunities lost as it would be the case of surrender of losses.

To address this issue and the interpretation of the above mentioned expression, the UK Court seems to have relied on the reference in the paragraph 3 of the Commentary to Article 24 that tax treaty non-discrimination aims at preventing differences in tax treatment rather than only differences in taxation. Therefore it concluded that the inability to surrender losses by the Surrendering company and to obtain payment from the claimant companies for those losses amounted to a difference in treatment which is other or more burdensome and falls within the scope of Article 26 (4) of the DTT UK/Luxembourg. The Court considered this interpretation to be the correct one, taking into account not only the scope of the tax treaty non-discrimination principle but also the ordinary meaning of the words of the foreign ownership provision.

I believe that the Court's conclusions are correct. The fact that the Surrendering company was deprived, contrary to a UK-owned company, to use its losses implies other tax treatment than that which would apply if it were owned by a UK company. Therefore, there is not only different treatment based on foreign ownership as protected by Article 26 (4) of the DTT UK/Luxembourg but also, and contrary to the HMRC position, other (although not less disadvantageous) taxation of the Surrendering company. This understanding was actually similar to the one which had already been followed before by the Swedish Supreme Administrative Court in the decision analysed above.[614] Again, this decision confirms that the scope of the foreign ownership provision when referring to *other taxation* means different treatment which can range from a different tax to the application of a different

[614] In this regard, see case RA 1993 ref. 91 I.

provision of a regime.[615] In other words: other taxation means other treatment that derives from a different legal basis[616] than that applicable to domestic owned companies. It is clear, in my view, that the inability to consolidate results as such constitutes other taxation in the sense of paragraph 5 of Article 24 OECD MTC. It is, however, more doubtful if, at least in the majority of cases, it may constitute a "*requirement connected therewith which is other or more burdensome"*. As typically the group taxation regimes are elective, the inability to consolidate might not be considered as an imposition of a more burdensome requirement.[617]

Finally, the FTT dealt with the requirement of whether the *ground for the discriminatory treatment* was indeed due to the non-UK ownership. The HMRC contended that this requirement was not met in the present case, relying once more on the reasoning in the case *Boake Allen*. Again, the difference for the situation in *Felixstowe Dock* is immediate: in *Boake Allen,* the non-resident parent company was itself party to the transaction. In *Felixstowe Dock,* the group relief is claimed between two UK resident companies whereas the only role of the foreign company related to the loss relief is to be the link company of the surrendering company. In *NEC semi-conductors*, the ACT exemption was not available in cross-border situations because the non-UK resident was not liable to ACT in the first place. In other words: the relevant reason for the different treatment was not the foreign ownership but rather the non-liability to tax of the foreign parent company. In the case of *Felixstowe Dock,* it is clear that there is no need for the link company to be resident in the UK in order for a group relief claim to be made between two UK resident subsidiaries. The link company in Luxembourg is not itself seeking either to surrender or claim group relief and therefore, it is immaterial to be within the scope of UK tax.

The UK revenue used an additional argument to claim that the sole or relevant reason for refusal of the claim was not due to the Luxembourg company not being resident in the UK. It pointed out the fact that the relief would be available even if the Luxembourg parent, while being non-resident, could carry on a trade in the UK through a PE. The FTT rejected that the fact that a different structure could have been put in place would be sufficient to displace the finding that the relevant reason for the different treatment was due to the non-UK ownership. In addition, it also made a very interesting remark from the point of treaty interpretation: it considered that such requirement of carrying on a trade in the UK would constitute other or more burdensome requirements for the surrendering company as per comparison with a UK resident link company as in this latter case there is no such

---

[615] See Kees Van Raad, *Nondiscrimination in International Tax Law*, Series on International Taxation no. 6, Kluwer Law and Taxation Publishers (1986), p. 142, who argues that the term *taxation* covers not only tax base (including exemptions) and tax rates, but also rules on loss compensation, elections and special regimes.

[616] See Klaus Vogel, *On Double Taxation Conventions: A Commentary to the OECD, UN and U.S. Model Conventions for the Avoidance of Double Taxation of Income and Capital, With Particular Reference to German Treaty Practice*, third edition (1997) p. 1295.

[617] See James G O´Brien, "The Nondiscrimination Article in Tax Treaties", 10 *Law & Policy in International Business* (1978), footnote 137, p. 583. Also in this regard see John F. Avery Jones, "Non-discrimination: Commerzbank – round two", *British Tax Review* 10 (1991), p. 406.

requirement for the UK company to carry on a trade. It could merely be a pure holding company.

The analysis performed so far is based on the assumption that either a group relief or a group contribution system is at stake. But doubts may arise whether in the case of *pooling regimes or consolidation regimes* the conclusions reached will be the same, considering the different way in which both these regimes operate as compared to the previous two analysed.[618] In fact, in both pooling and consolidation regimes also the parent company is included in the overall aggregation of the results and acts as the taxpayer of the tax group. It is somewhat different from group relief or group contribution systems where it is possible to "isolate" the receiving and the contributing company. Since, typically, two domestic companies with a foreign parent company do not qualify under domestic group consolidation or pooling regimes, the question is whether the non-discrimination clause of paragraph 5 of Article 24 may require that the group taxation regime is available to the two domestic subsidiaries in similar terms as analysed above to group relief or group contribution systems.

The issue, naturally, comes down to whether the pooling or consolidation can be limited to the two domestic subsidiaries. This relates to the interpretation of the *"other similar enterprises"* requirement. If the consolidation of the two domestic sister companies alone is not possible, it may be questioned whether this could constitute discrimination on the basis of paragraph t of Article 24. Irrespective of whether the sister companies are foreign or domestically owned, consolidation of the sister companies is not possible. In other words, the other similar enterprises requirement regarding foreign ownership would not be verified.

Naturally, as concerns the possibility of the two domestic subsidiaries to consolidate together with their foreign parent company the answer is no different from the conclusions already drawn: the foreign parent company is not liable to tax in the State where the subsidiaries are located so that the profits of the parent cannot be included in the income to be taxed in the subsidiaries' State pursuant to Article 7 of the OECD Model Convention, which allocates power to tax only to the extent that the parent company has a permanent establishment located in the State of the subsidiaries.

A similar issue was brought before the Luxembourg Courts[619] involving the application of the *regime d' integration fiscale*. The regime stated in Article 164 bis of the Income Tax Law provides for a typical pooling regime, according to which, the results of each of the

[618] As said in Part II, group relief and group contribution systems somehow mirror each other. They operate on similar terms: one of the companies makes a transfer to other company member of the group. The difference being that in the group relief, there is a transfer of losses from a loss-making to a profit-making company whereas in the group contribution system, this is, in principle, the other way around.

[619] *Tribunal Administratif du Grand-Duché de Luxembourg, no. 20624* of 23 August 2006 and *Cour Administrative du Grand-Duché de Luxembourg, no. 21979 C*, of 19 April 2007.

companies included in the *integration* perimeter are determined separately by each company being in turn the global result determined based on a consolidated return to be submitted by the parent company of the group. The fiscal integration leads to the adding up of the results of the several companies which are members of the group with a pooling of results which occurs not only vertically (parent and subsidiaries) but also horizontally (sister companies between themselves).

This situation[620] concerned a Belgian parent company which held six subsidiaries located in Luxembourg. One of the Luxembourg companies had incurred a substantial loss during the year of 2004, while the other subsidiaries were profitable. In order to immediately offset those losses against the profits of the remaining subsidiaries of the group, the loss making company together with the remaining five sister companies applied for the application of the regime of fiscal integration. The object of the application was limited to the horizontal pooling of the results (that is, to the sister companies) as it was based on a breach of the non-discrimination clause provided in Article 24 (6) of the Double Tax Convention Belgium/Luxembourg (which wording is identical to paragraph 5 of Article 24 of the OECD Model Convention) as the reason to deny the application of this regime to the Luxembourg subsidiaries would be due to the fact that they were held by a foreign parent company resident in Belgium. The first instance court[621] supported the applicants claim. This decision, however, was overturned by the Court of Appeals.[622] This Court considered that the fiscal integration implied vertical compensation of results and that was only possible with the participation and consideration of the parent's results. Therefore, it concluded that there was no discrimination under Article 24 (6) of the treaty Belgium/Luxembourg since the fiscal integration required all the companies of the group – including the parent company – to be within the tax jurisdiction of Luxembourg.[623]

This discussion also arose in the Netherlands as regards the application of the fiscal unity regime and the possibility to consolidate the results of Netherlands subsidiaries held by a

---

[620] See a description of the case in Jean-Pierre Winandy and Dirk Richter, IFA Report Luxembourg, "Non-discrimination on the crossroads of international taxation", *Cahiers de droit fiscal international*, Vol. 93a, (2008), pp. 377-379.

[621] *Tribunal Administratif du Grand-Duché de Luxembourg, no. 20624* of 23 August 2006.

[622] *Cour Administrative du Grand-Duché de Luxembourg, no. 21979 C*, of 19 April 2007.

[623] A similar reasoning – Although not based on a claim of tax treaty discrimination - was followed by the Second Circuit of the US Court of Appeals in *Commissioner v Manus Muller & Co.* of 1 July 1935 by stating that:

> "In the first place it contradicts the underlying notion on which affiliation rests. When a business is single, industrially and financially, it ought to be assessed as such; there is but a single income and intramural transactions cancel each other; that is the notion that supports affiliation. But if a foreign corporation is the only nexus which unites domestic subsidiaries – if it is the 'parent' – this theory can only be realized by bringing its income into hotchpot [sic] with the rest, just what…itself forbids. To eliminate that income and still to treat as a unit those companies which are a unit only because the excluded foreign corporation holds the shares, is to deny the premise and affirm the conclusion. True, it would not compromise the result in practice when the 'parent' had no income, but those would be uncommon instances."

German parent company. The position followed by the Netherlands tax authorities was that consolidation among subsidiaries could not be claimed under the foreign ownership non-discrimination clause of the relevant treaty. The relevant argument was that since the fiscal unity requires that all companies are treated as one and that necessarily involves the parent company it is therefore in the essence of the fiscal unity regime that the parent company (or a Netherlands PE to which the shares in the subsidiaries are allocated) is always included.[624]

There are several arguments to sustain that this reasoning should not be followed.[625] First and foremost, the fact is that two subsidiaries would be able to consolidate/pool their results if they had a parent company resident in the same State. However, in the case of a foreign parent company, the same sister companies are deprived from the benefits of consolidation, the reason being that they are held by a company resident in another State. This de facto discrimination is based on the place of residence of the parent company which is precisely the type of discriminatory treatment prohibited in paragraph 5 of Article 24.[626] If the application of the tax group regime is possible domestically but not possible on a cross-border basis and the relevant factor is because the parent company is not resident in the same State of the subsidiaries, that fits into the plain wording of Article 24 (5).

Inherent to application of the foreign ownership provision is precisely the non-inclusion of the parent company's results in the State of residence of the subsidiaries. In this case the Luxembourg regime provides for both vertical compensation (consolidation of results between parent and subsidiaries) and horizontal compensation (consolidation of results between the subsidiaries). The vertical compensation was not possible because the parent was resident in another State.[627] Therefore the taxpayer requested the consolidation of the

---

[624] See Gerechtsof Amsterdam, cases 11/00180, 11/00587 and 11/000824 of 17 January 2013. These cases also had a claim based on the breach of the freedom of establishment under Art. 49 of the TFEU and were referred to the CJ culminating in the judgment of 12 June 2014, Joined Cases C-39/13, C-40/13 and C-41/13, *Inspecteur van de Belastingdienst/Noord/kantoor Groningen v SCA Group Holding BV et al*.

[625] See Jean-Pierre Winandy and Dirk Richter, IFA Report Luxembourg, "Non-discrimination on the crossroads of international taxation, *Cahiers de droit fiscal international*, Vol. 93a, (2008), p. 379.

[626] See Bruno da Silva, "Non-Discrimination in Tax Treaties v EU Law: Recent Trends and Issues for the Years Ahead", in D. Weber (ed.) *EU Income Tax Law: Issues for the Years Ahead*, EC and International Tax Law Series Vol. 9 IBFD (2013), pp. 311-315, G.F. Boulogne, "Group Taxation within the European Union: Did Papillon and Art. 24 (5) of the OECD Model Tax Convention Create a Butterfly Effect?", *European Taxation* 5, IBFD (2011), p. 176 or Raul-Angelo Papotti, "Treaty Non-Discrimination Clauses in Group Consolidation Situations", 31 *Intertax* 10, Kluwer Law International (2003), p. 322.

[627] An interesting argument in favour of the irrelevance of the inclusion of the parent company in these cases is based on a two-step approach as to the application of the foreign ownership provision. First, one should determine if the two sister companies may enjoy the consolidation regime as they were hypothetically headed by a resident parent company. As a second step and taking into account the limitations of the treaty distributive rules, the circumstance that the inclusion of the parent company was always necessary would not be relevant for the comparison under the foreign ownership provision considering the limitation under Article 7 which would prevent the results of the foreign parent company to be taken into account in the State of

results of the subsidiaries without the inclusion of the parent company. Being the horizontal compensation one of the aspects of the fiscal integration and since only the taxpayer's request was limited to the results of the subsidiaries it seems indeed that the decision should have been ruled in favour of the taxpayer and that the foreign ownership provision would apply in this case.[628]

In addition, it should be stressed that the tax base in the State of the subsidiaries not affected by the fact that the parent company is not included in the group. The purpose is to include the subsidiaries only and the circumstance that the foreign company is not subject to the tax jurisdiction of the State of the subsidiaries is irrelevant since the purpose is precisely to apply the tax group as regards the subsidiaries. The impossibility to consolidate or pool the results of the subsidiaries is essentially due to the fact that the tax group regime requires a domestic parent company and that is, by itself, no different from the other situations analysed above where discrimination was found to exist based on the foreign ownership or control of the parent company.

Furthermore, if it is correct to say that domestic consolidation or pooling regimes typically do not allow only horizontal integration of results, that is because the whole regime is conceived based on the assumption of having a parent company resident in the same State of the subsidiaries. Again, not allowing the application of the tax group regime in this case is precisely the rationale behind discrimination: the existence or not of a domestic parent company.

The argument that these regimes operate through a total integration, that is, both vertically and horizontally and therefore a situation with only horizontal integration does not correspond to similar enterprises, it is also not convincing. In practice, is it possible to have only horizontal integration. An example may be provided of a pure domestic situation in which a parent company has a zero result (notably in the case of a pure holding parent company).[629] That means that effectively, the result of the fiscal integration is limited to the horizontal compensation of the results of the different subsidiaries..

In addition, the fact that it is usually the parent company which aggregates the group members' results (by filling in a consolidated tax return) and it is liable for the payment of the tax are also not convincing arguments. These only relate to techniques of the income

---

residence of the subsidiaries. See Raul-Angelo Papotti, "Treaty Non-Discrimination Clauses in Group Consolidation Situations", 31 *Intertax* 10, Kluwer Law International (2003), p. 322, footnote 17.

[628] See Niels Bammens, *The Principle of Non-Discrimination in International and European Tax Law*, IBFD Doctoral Series no. 24 (2012), p. 461.

[629] See Jean-Pierre Winandy and Dirk Richter, IFA Luxembourg Report "Non-discrimination at the crossroads of international taxation", *Cahiers de droit fiscal international* 93a, (2008), p. 379.

consolidation of the group[630] which should not bear any relevance as to the final outcome on the breach of the paragraph 5 of Article 24.

Therefore, also *in consolidation and pooling tax group regimes,* it should be possible to form a group between sister companies resident in the same State[631] which therefore also fall within the scope of Article 24 (5).

In any event and if through the application of the foreign ownership provision it leads to a situation where only the results of the subsidiary are aggregated differently to what occurs in a purely domestic situation, that is merely the result of the application of tax treaty non-discrimination. Paragraph 76 if the Commentary to Article 24 sets out that paragraph 5 "forbids a Contracting State to give less favourable treatment to an enterprise" which implies that its purpose is to avoid differences in treatment due to foreign ownership which are disadvantageous. If applying paragraph 5 may lead to a more favourable result, that is, with no inclusion of the parent company, that is not a disadvantageous treatment for the purposes of this clause but a mere consequence of removing the discriminatory treatment provided in the domestic laws.[632]

9.5.1.5. Foreign parent company with two subsidiaries (sister companies) which in turn hold two sub-subsidiaries

The reasoning and respective income would not be different in a situation in which one adds a layer of intermediary holding companies which are resident in the same State of the parent company.

---

[630] This, as referred to, was precisely the argument made by AG Kokott in her Opinion in the *SCA Group Holding* case and which is entirely applicable within the scope of analysis of tax treaty non-discrimination:

> "[…] the question of in which company the tax entity consolidation takes place is purely technical and irrelevant as far as the attainment of the objective of the regime is concerned. If the effects of a tax entity formed between the subsidiaries can be made possible in principle, the question of the taxable person to which the operating result is ultimately attributed is of secondary importance."

See Opinion of AG Kokott delivered on 27 February 2014 in Joined Cases C-39/13, C-40/13 and C-41/13 *Inspecteur v an de Belastingdienst Noord/kantoor Groningen v SCA Group Holding et al*., para. 77.

[631] Similarly, C. Van Raad, "Grensoverschrijdende Fiscale Eenheden: Hoe ver Reikt de Bescherming van non-discriminatiegeboden?", *WFR 1994/1717* regarding the application of the Netherlands fiscal unity regime and, regarding the application to tax group situations in general, see Kees Van Raad, "Non-Discrimination under Tax Treaties regarding Groups of Companies", G. Maisto (ed.*) International and EC Tax Aspects of Groups of Companies*, EC and International Tax Law Series, Vol. 4, IBFD (2008), p. 160.

[632] Otherwise, and if accepted, this argument this would lead to a strange result where a discriminatory measure would somehow be justified precisely based on the discriminatory factor. The different result achieved in these cases between domestic and cross-border situations is actually a consequence of the domestic law itself and does not derive directly from the application of the non-discrimination clause.

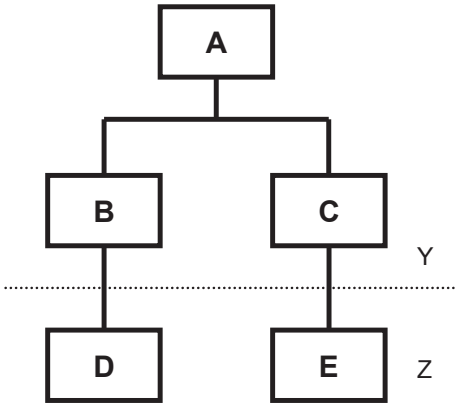

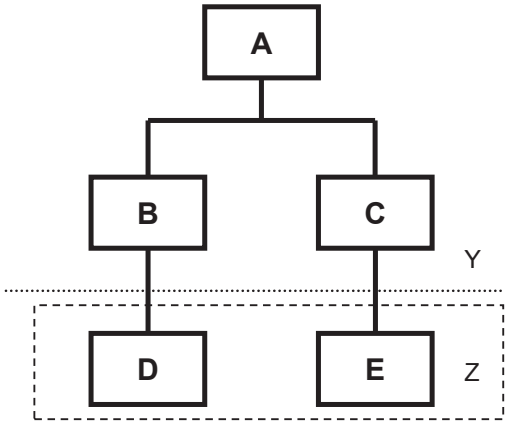

Concretely in this situation, both the top holding company (company A) and the sub-subsidiaries (companies D and E) are resident in the same State, the two intermediary subsidiaries (companies B and C) being resident in a second State. In such alternative, the same conclusions that were reached regarding situation X (sandwich situation) above apply. Thus, it is possible for the two sub-subsidiaries based on paragraph 5 of Article 24 to claim a discriminatory treatment based on foreign ownership. Article 24 (5) is applicable and therefore, the benefits of a group taxation regime should apply between companies A, D and E.

9.6 Other benefits beyond income consolidation

The same interpretation as referred to above regarding the application of the non-discrimination clauses to tax groups within the scope of income consolidation applies *mutatis mutandis* to other intra-group benefits. This general conclusion is not surprising as a proper interpretation of the non-discrimination clauses should not affect the allocation rules in tax treaties but rather, in principle, only has impact as regards the personal scope of tax groups.

The clearest illustration of this refers to intra-group transfers.

A first example can be found in a decision of the Supreme Court of Sweden.[633] The case involved an intragroup sale of shares between two Swedish subsidiaries held by a Netherlands parent company. Under the legislation in Sweden, the fact that the group was

[633] RA 1987 ref. 158 described in Jorgen Bengtsson, IFA Report Sweden "Non-discrimination rules in international taxation", *Cahiers de droit fiscal international* Vol. LXXVIIIb, Deventer Kluwer (1993), p. 662. See also Philip Baker, *Double Taxation Conventions*, Sweet & Maxwell (3rd edition), pp. 24-2/8 and 24-2/9, Bertil Wiman, "Swedish tax law and discrimination – some observations", *EC Tax Review* 2 (1997), p. 103, or David Oliver, "Other Similar Enterprises", *British Tax Review* 5 (1989), p. 141.

held by a foreign parent company would trigger capital gains on the sale, which otherwise would be free of tax. The Court confirmed that the application of the foreign ownership prevented the taxation and the inability to make use of the tax exemption due to the fact that the group was held by a non-Swedish parent company.[634] Similar to the situation involving income consolidation, deferral on the sale of the shares between two resident companies should not be denied due to a foreign parent company as this entity is not part in the transaction and therefore it is not relevant to be within the jurisdiction to tax of the State where the parties of the transaction are located.

Another decision with relevance for this analysis is a decision of the Finish Supreme Court,[635] in which a US resident company claimed that the inability of its Finnish PE to benefit from a tax neutral transfer of assets to a Finish company constitutes prohibited discrimination of the Finnish PE under the Double Tax Treaty concluded between Finland and the US. The facts of the case involved A Inc., a US resident company that had a PE in Finland. The US company planned to incorporate the PE by transferring to a newly incorporated Finnish company all the assets and liabilities of the PE receiving shares in compensation. The taxpayer claimed that this transaction should benefit from the tax neutral regime applicable to business reorganizations and therefore, be exempt from capital gains taxation as it would incur in the case of a similar transaction involving a Finnish subsidiary (or an EU resident company) rather than a PE of a foreign company resident in a third Country (US). Otherwise that would constitute a breach of the PE non-discrimination provision included in the applicable tax treaty. The Finnish Supreme Court agreed with this claim and considering that the benefit of the tax neutral reorganization pursuant the transfer of such assets should be extended to the PE of a foreign company under the same terms as are applicable to a Finnish subsidiary. The conclusion of the Court is logical. The subject of discrimination – the PE – is being discriminated as compared with the object of comparison – a subsidiary carrying on the same activities - as it would be subject to capital gains taxation, or, in the words of the PE non-discrimination clause: less favourable taxation.

[634] A different scenario was at stake in a decision of the Swiss Supreme Court Judgment 2A.542/2 analysed by Robert J. Danon in, "Cross-border Transfers of Participations within a Group: a Note on a Recent Judgement Rendered by the Swiss Supreme Court, 32 *Intertax* 6/7 Kluwer Law International (2004), pp. 336-339. That case dealt with the regime concerning cross-border transfer of participations made within a group. The position of the Swiss tax authorities was that the tax deferral mechanism could not apply in the case a foreign company acquired the transferred company but only if acquired by another Swiss company. The facts involved the sale of a Spanish subsidiary held by a Swiss company to its ultimate Netherlands parent company. The Swiss Supreme Court considered that nothing in the law suggested that the interpretation of sale made in a group required that the sale would have to be to a Swiss company. In any event, it considered that such requirement constituted a breach of the foreign ownership provision of the applicable DTT Switzerland/Netherlands. While this case confirms the application of the foreign ownership clause to intra group sales of shares, its application differs from the typical cases of application of paragraph 5 of Article 24 to groups which are limited to domestic situations. The difference in this case occurs because the requirement of Swiss ownership could not been derived even from the domestic law.

[635] KHO 2013:169 of 25 October 2013. For an analysis of this case See Martti Nieminen, "Transfer of Assets Regime Applicable to US Company's PE under Tax Treaty Non-Discrimination Rule", 54 *European Taxation* 7 IBFD (2014), pp. 325-329.

While this decision was not applied within the specific context of a tax group,[636] its reasoning is to be applied in identical terms. Actually, in other situations[637] such reasoning was precisely applicable in the case of a transfer of assets between a PE of foreign company to a resident company belonging to a tax group.

9.7 Per element or overall approach

An interesting point in the application of tax treaty non-discrimination, in particular when dealing with group taxation regimes, is whether one should conduct a separate discrimination test concerning each of the benefits associated with the group regimes – per element – or whether an overall approach is more appropriate. Group taxation regimes frequently involve several different consequences for its group members, such as the possibility to offset profits with losses, the non-application of the interest deduction limitations, intra group tax free transfers of assets, etc. If it is accepted that the effect of tax treaty non-discrimination clauses should not lead to a cross-border extension of income consolidation, one may wonder whether the denial of these other advantages of group taxation regimes may in fact lead to a breach of Article 24.

This brings into debate within the tax treaty non-discrimination context, a subject which had already been discussed in EU Law with the *X Holding*[638] case: the per element approach *v* the overall approach regarding the fiscal unity benefits. One of the discussions following the judgment in the *X Holding* case was whether the application of the fiscal unity in a cross-border situation was, by itself, compliant with EU Law, or rather, one should analyze, element per element, the different benefits which are inherent to the fiscal unity in order to test whether its limitation to pure domestic situations was both justified, and proportional with EU Law. The arguments raised, in particular by Weber,[639] were that a per element approach would constitute a more proportional approach rather than the pure rejection of cross-border fiscal unity. The per-element approach had already been already

[636] The decision adopted by the Finnish Supreme Court appears to reject applying this reasoning to tax groups based on para. 41 of the OECD Commentary to Art. 24. The Court relies on para. 40d) of the Commentary which provides that a PE should have the same rules applied to resident enterprises, with regard to the taxation of capital gains realised on the alienation of assets, during or upon the cessation of business. Aside from the arguments already discussed which support that para. 3 does indeed apply to tax groups in general, the fact is that materially, there is no difference that justifies making a differentiation between transferring the assets to a unrelated company for which para. 40d would apply and the PE would benefit from the scope of protection of para. 3 and rejecting its application within the context of a tax group. The issue is exactly the same: transfer of assets without triggering taxation, which should clearly deserve the same outcome, that differences in treatment for a PE does breach the non-discrimination provision in tax treaties.

[637] See, for instance, Harald Hauge, IFA Report Norway "Group Taxation", *Cahiers de droit fiscal international*, Vol. 89b, (2004), pp. 424-525, confirming the application of the PE non-discrimination clause for intra-group transfer of assets from a PE to a resident company.

[638] CJ 25 February 2010, C-337/08, *X Holding BV v Staatssecretaris van Financiën*.

[639] See D. Weber, "X Holding: Refusal of Advantage of a cross-border tax consolidation a justified restriction of the freedom of establishment", *Highlights & Insights on European Taxation* 2010/7.6.

suggested by AG Kokott in her Opinion[640] in this case. And was further developed in Kokott's subsequent Opinion in the *Group Steria* case.[641] In this Opinion, Kokott (correctly in my view) clarified[642] that in *X Holding* the Court of Justice had merely examined whether it was justified to deny a parent company the possibility to offset losses incurred by a non-resident subsidiary as part of group taxation. The CJ confirmed this reasoning this when explicitly referring in its judgment in this case[643] for the need per-element analysis and therefore for an individual assessment against the freedom of establishment of every aspect of group taxation that is not equally applicable in a cross-border context. Therefore, from an EU law perspective, a separate assessment as regards each tax advantage granted under the group taxation regime should be made in order to conclude as to the existence (or not) of a discriminatory tax treatment.

The *Hoge Raad*[644] followed the view that the fiscal unity was a package deal and therefore, that it was not possible to simply cherry-pick the benefits and apply them in a cross-border scenario. The BFH was also influenced by the CJ's judgment in *X Holding* when delivering its judgment in the *Scheuten Solar Technology* case.[645] In the proceedings, the taxpayer argued that the add-back of 50% of the interest deduction constituted a breach of the freedom of establishment since, in a domestic and within an *Organschaft,* such limitation would be avoided. The BFH considered that, although the CJ judgment in *X Holding* concerned only cross-border losses, the justification was also valid for the remaining aspects of consolidation. Therefore, it concluded that cherry-picking should not be allowed regarding EU law protection and the denial of a single element of the consolidation could not constitute a violation of the freedom of establishment.

9.7.1 Overall approach collides with the object and purpose of tax treaties

A preliminary issue is, of course, whether the overall approach constitutes a proper interpretation[646] of EU law.[647] And then whether such interpretation should be similarly

[640] Opinion of Advocate General Kokott delivered on 19 November 2009, paragraphs 73-83.
[641] Opinion of Advocate General Kokott delivered on 11 June 2015, in case C-386/14, *Group Steria SCA v Ministere des finances et des comptes publics*. For a detailed analysis if this case, see infra Part IV.
[642] Opinion of Advocate General Kokott delivered on 11 June 2015, in case C-386/14, *Group Steria SCA v Ministere des finances et des comptes publics*, paras. 31-34.
[643] See CJ, 2 September 2015, C-386/14, *Groupe Steria SCA v Ministere des Finances et des Comptes publics*, para. 28.
[644] *Hoge Raad* , case no. 43 484 bis, of 7 January 2011, *BNB 2011/96*.
[645] I R 30/08, Bundesfinanzhof, 7 December 2011, *IStR* (2012) p. 262.
[646] For a criticism, see G.M.R. Blokland and M.J.A. van den Honert, "X Holding vandaag de dag: kan de wetgever nu daadwerkelijk rustig ademhalen?", *Weekblad Fiscaal Recht* 6019, 16 June 2011, pp. 782-790 and also Joachim Englisch "X Holding: Looking beyond Loss Relief Issues", in Dennis Weber and Bruno da Silva (eds.) *From Marks & Spencer to X Holding: The Future of Cross-Border Group Taxation*, EUCOTAX Series on European Taxation Vol. 29, Wolters Kluwer (2011), pp. 73-75.
[647] See for a description within the EU law context Part IV *infra*. The problems of an overall approach can be illustrated by the amended French rules on withholding tax on profits distributions after the decision of the CJ in the *Santander* case (CJ 12 May 2012, *Santander Asset Management SGIIC SA (and others) v Ministre du*

applied in the tax treaty context. The fact is that following the overall approach in what refers to the interpretation of tax treaty non-discrimination clauses may lead to effects which do not take into account the object and purposes of treaty non-discrimination.

A first example may be illustrated by the previous decision of the *Hoge Raad*[648] which rejected the application of the foreign ownership clause as it would lead to cross-border consolidation. In this case, the taxpayer submitted that it was *only* referring to the discriminatory tax treatment of the Netherlands subsidiary from the perspective of the interest deduction limitation and not arguing for inclusion of the French parent company in the fiscal unity (that is, requiring consolidation in a cross border scenario). In other words, the taxpayer claimed that, *only* for the purpose of the interest deduction limitations, should it receive the same treatment as a resident taxpayer included within the fiscal unity, as in such case, the interest deduction limitations do not apply. As referred to above, the *Hoge Raad* rejected such arguments by considering that a taxpayer with a domestic parent company within the fiscal unity was not comparable to a taxpayer with a foreign taxpayer. Although recognizing the difference in treatment, the Court observed that this arises in dissimilar situations. The *Hoge Raad* rejected the argument raised by the taxpayer, that is, the possibility to have a single benefit of the fiscal unity. It considered that the fiscal unity is a package deal which involves all related tax consequences and not only a tax consequence as claimed by the taxpayer. Therefore, it was not possible to reap the benefits of the fiscal unity without entering into the fiscal unity itself. The Supreme Court concluded, since in this case, a foreign parent company and a domestic parent company were not comparable for the purposes of cross-border consolidation, the outcome was that there was no violation of the foreign ownership provision.

Budget, des Comptes publics, de la Fonction publique et de la Réforme de l'État, Joined Cases C-338/11 to C-347/11.). This case considered that the French withholding tax rules on outbound dividends paid to non-resident UCITS was in breach of the free movement of capital. Following this judgment, the French Government amended the legislation by introducing a 3% corporate income tax surcharge on corporate dividends which applies, *inter alia*, to dividends paid by a subsidiary to its parent company. An exemption applies, however, in the case of dividends paid between companies which belong to a tax consolidation group. This is limited to companies which are subject to French corporate income tax thus excluding foreign companies. Therefore, inter-company dividends paid between French resident companies which meet the group consolidation requirements are tax exempt, whereas if paid to non-French companies meeting all the requirements except tax residence in France are subject to this surcharge. While arguably this may constitute a restriction of the freedom of establishment, following an overall approach would likely (at least following the outcome of the *X Holding* judgement and the way it was interpreted by the *Hoge Raad*) allow to justify that this difference in treatment does not refer to inter-company dividend payments but rather to the group consolidation regime itself which does not allow a foreign entity to become a group member. The overall approach somehow allows group consolidation regimes as a mechanism to justify measures which otherwise would arguably be considered as discriminatory. For a description of the French regime see Eric Robert "The New French 3% Withholding Tax on Profit Distributions: A Minefield for the French Government", 53 *European Taxation* 2/3 IBFD (2013), pp. 115-120.

[648] *Hoge Raad*, case no. 10/05268, of 21 September 2012, *VN 2012/47.14*.

The opposite result was achieved with the previously referred to decision of the BFH[649] which extended the application of the *Organschaft* in a cross-border basis.
Briefly recalling the facts, a UK parent company claimed to be included in the German *Organschaft* with its German subsidiaries for the purposes of trade tax. A German sub-subsidiary paid interest to its German (intermediate) parent company that was ultimately held by the UK company. This interest was not deductible for German trade tax purposes. The deductibility was limited to companies included in the *Organschaft*, which in turn, required all group members to be resident in Germany. Therefore, had the UK parent company been resident in Germany, the group taxation regime would have been allowed and the interest deductible. The taxpayer claimed a breach of the foreign ownership provision under the Double Tax Treaty concluded between Germany and UK requesting the application of the *Organschaft*. The keystone, however, was that the taxpayer limited its request not to the application of the whole *Organschaft* regime but only as regards the discriminatory treatment on the non-deductibility of the interest payments. So, the claim of the benefits of the *Organschaft* was limited to avoiding the 50% interest deduction limitation The *Bundesfinanzhof* confirmed the taxpayer's request on the breach of the foreign ownership provision and considered the deductibility of the interest even without stating that the UK company should qualify as the UK parent company of the group. However, the BFH added that the application of the non-discrimination foreign ownership provision could also lead to an extension of the effects of the consolidation with the possibility of cross-border shifting of profits and possible double non-taxation.

The decisions of the BHF and the *Hoge Raad* demonstrate the consequences of following an overall approach. In both cases the result is undesirable. In one case the rejection of the claim and the application of the interest deduction limitations led to a taxation that is more burdensome than the taxation in case the specific element applicable to a tax group had been applied. In the German case the extension of the whole group taxation regime in order to include the foreign parent through the application of the foreign ownership provision of paragraph 5 of Article 24 may lead to double non-taxation and involve an incorrect application of the foreign ownership provision: in that situation, the difference in treatment is not due to the foreign ownership but the foreign tax liability, that is, forming a group between the domestic subsidiary and the foreign parent company is not possible since the parent company is not within the scope of tax jurisdiction of the Contracting State where the subsidiary is a resident.

An alternative is then to consider the adoption of a per-element approach and to claim the interest deduction taking into account the requirements (and limitations) in the application of the non-discrimination clauses. This raises the question of whether a different interpretation can be followed and if a per element approach is possible regarding tax treaty non-discrimination.

[649] See Bundesfinanzhof , case I R 54, 55/10, of 9 February 2011.

An interesting example can be found in the in the UK case *UBS AG*. The case involved a UK permanent establishment of a Swiss company that had suffered a substantial amount of trading losses and had received dividends from UK companies. If the permanent establishment were a UK company, it would be entitled to the benefits of the ACT tax credit in respect of the dividends paid by the UK companies. The taxpayer claimed that such a difference in treatment amounted to a discrimination forbidden by the PE non-discrimination clause of the DTT UK/Switzerland (in this case, Article 23 (3)). One of the arguments raised by the UK Revenue was that there was effectively no discrimination because a permanent establishment and a UK company were not comparable: while the UK resident receives a conditional payment in respect of the tax credit which is reversed when that company later pays dividends, in the case of the permanent establishment, the tax credit would constitute an absolute payment which ultimately leads to the permanent establishment receiving a better treatment than a UK resident company. Therefore, the UK revenue found that the ACT regime should be looked at a whole and it was not possible to separate particular aspects of it. The UK Special Commissioners (which nowadays correspond to the UK First Tier Tribunal) dealt with this issue by holding that:[650]

> "Nowhere in the Commentary is there any suggestion that a global approach should be taken so as to take account of each and every tax provision in either the domestic tax law of the Contracting State or the Treaty. It refers to numerous items to be included in the comparison without making any statement about making an overall comparison. […] we consider that the Commentary requires an item by item approach when making the comparison. We consider that the effect of the substantive provision under scrutiny on the permanent establishment on the one hand and the resident comparator on the other should be made without regard to the effect on either of other provisions which are not under scrutiny. The application of each and every tax provision is the subject of scrutiny of Article 23 of the treaty […]. The contrary global view would either make a comparison impossible (because it is always possible to point to some differences between a permanent establishment and a UK resident company which arguably put them in different circumstances or suggest that tax is not levied 'less favourably' on the present establishment) or draw arbitrary lines to determine which provisions other than the provision under scrutiny could or could not be considered."

The Special Commissioners looked therefore exclusively at the provision that allowed the tax credit and disregarded the remaining consequences of the item or per element approach. It is interesting to note that in this particular aspect their decision was upheld by both the High Court[651] and the Court of Appeal.[652]

As referred to above, also in a decision[653] prior to *X Holding* the *Hoge Raad* seemed to follow a per-element approach.[654] The case involved a Netherlands BV which held a

[650] See *UBS AG v Revenue and Customs Commissioners*, [2005] S.T.C. 589, 7 June 2005, paragraph 24.
[651] *UBS AG v Revenue and Customs Commissioners*, [2006] EWHC 117, 7 February 2006.
[652] *UBS AG v Revenue and Customs Commissioners*, [2007] EWCA Civ 119, 21 February 2007.
[653] *Hoge Raad* no. 08/00900, of 2 October 2009, *BNB* 2010/22.

German GmbH subsidiary which suffered a loss. The taxpayer argued for the deduction of the subsidiary's losses in the Netherlands. Although the claim was made based on the possible breach of EU law, the relevance of the Court's approach could be considered, also for the purposes of tax treaty, non-discrimination. The *Hoge Raad* rejected the taxpayer's request but did not follow the path of considering that, in the absence of a tax group, also the losses of a domestic subsidiary could not be used by the parent company and therefore, there was no discrimination. By analysing the specific benefit claimed, the *Hoge Raad* does not seem to have denied the possibility of a taxpayer being entitled to one of the benefits of the consolidation even if the (entire) group taxation package may not apply.

9.7.2 Per-element approach is possible in a tax treaty context

The question is whether the per-element approach is also possible in a tax treaty context. The above decision of the UK Courts appears to provide for a positive answer. Likewise, it is interesting to refer to a decision of the Swedish Courts confirming this possibility. The case[655] involved a Netherlands parent company which held two Swedish subsidiaries (A and B). The parent company envisaged selling the shares of subsidiary B to subsidiary A and subsequently, perform an upstream merger of the first company into the second. Subsidiary B also had shares in a previously acquired – from a company outside the group - subsidiary (C) also located in Sweden. The claim involved in this case was whether previously incurred losses by subsidiary A would be lost due to the reorganization. An interesting point in this case is to detach two relevant moments of the Swedish regime. In a first moment, if the parent company had been Swedish from the outset, the losses of A would already have been a loss upon the moment of the acquisition of the shares of C by subsidiary B. But such consequence did not occur in the case of a foreign parent company of the group. However in a second moment, if a Swedish parent company had then transferred the shares in one subsidiary to the other and subsequently merged the two companies, this would not affect the right to deduct the losses suffered by one of the companies as the transactions would occur only between companies belonging to the same group. Nevertheless, in this second moment, as the parent of the group was a foreign company, the transfer of the shares from B to A would deprive the group from the possibility to use the losses of A. This means that the Swedish regime, in a first moment and because the parent company was foreign, did not disallow the use of the losses of A, but such loss would have been disallowed in a second moment upon the merger precisely due to the fact that the parent company was foreign. The taxpayer claimed that the impossibility to use the losses of A upon the reorganization violated the foreign ownership provision of the applicable tax treaty. It is clear that in taking an overall approach the taxpayer, when compared with a situation involving a domestic group parent company, was

---

[654] See Thies Sanders "X Holding, the Morning after in the Netherlands", in Dennis Weber and Bruno da Silva (eds.) *From Marks & Spencer to X Holding: The Future of Cross-Border Group Taxation*, EUCOTAX Series on European Taxation Vol. 29, Wolters Kluwer (2011), pp. 134-135.

[655] See RA 1997 ref. 206. For a description of this case see Kristina Stahl, "The Application of the Treaty Non-discrimination Principle in Sweden", Kluwer Law International, 28 I*ntertax* 5, p. 197.

not at a disadvantage because of having a foreign parent company: a Swedish parent company would also have been deprived from using the losses, only then in a different moment. However, the Court upheld the taxpayers' arguments. By looking specifically at a certain transaction and independently from the overall regime and position of the taxpayer, it ruled that indeed there was discriminatory tax treaty. According to the Court, such outcome resulted from a separate analysis of the transaction - and irrespective of the overall position of the taxpayer – where a group with a foreign parent was in a less advantageous position than the corresponding group with a Swedish parent company.[656]

The starting point would be to take a more liberal approach to the interpretation of non-discrimination in tax treaties that would not require identification of all facts but only a similarity of the relevant facts regarding the specific instance at stake. In other words, one would take into account, for the construction of the comparator, only the elements that are required for claiming the application and scope of protection offered by the non-discrimination clauses. And then one would extent the application of those clauses to the particular disadvantages claimed by the taxpayer without either rejecting or extending the applicability of the whole group regime.

The claim of the specific element of non-application of the interest deductions limitations constitutes a good example. One of the benefits inherent to some group taxation regimes is that they preclude the application of the otherwise applicable interest deduction limitations. The question is then whether in a hypothetical situation it may be possible to claim the application of that individual element of group taxation based on a breach of the non-discrimination clause of Article 24 (4) (or Article 24 (5) depending on the particular tax treaty and the scope of national legislation) in the case of payments made from a subsidiary to its foreign parent company.

Under the suggested approach we would then be limiting the analysis to the specific element of interest deduction limitations. Removing this disadvantage does not require shifting of profits or losses cross-border. It requires analysing whether all the requirements of the group taxation regime are in place, aside from the residence of the parent company[657] and it does not involve the taxation of the parent company itself, but merely the subsidiary. Therefore, the result does not go against the wording of Article 24. In this sense, applying the non-discrimination provisions by making a separate analysis for each element and restricting it to domestic effects would allow achieving a result which complies both with the wording and purpose of tax treaty non-discrimination. In fact this is further enhanced when considering that it is arguable that the goal pursued by the non-discrimination article

[656] See Kristina Stahl, "The Application of the Treaty Non-discrimination Principle in Sweden", Kluwer Law International, 28 I*ntertax* 5, p. 198.
[657] This is precisely the approach suggested by Jürgen Lüdicke in the comments to case I R 54, 55/10, Bundesfinanzhof, 9 February 2011, in *13 International Tax Law Reports*, p. 847.

requires a purposive interpretation. Following this approach[658] means that the possibility to benefit from the tax treaty non-discrimination protection should not be denied regarding the aspects of the particular regime, which can indeed be applied.

As long as there is no shift of profits and losses, the application of the non-discrimination provisions does not affect the allocation of taxing rights under the treaty provisions and therefore the legal consequences of the application of those provisions are limited to removing the existing domestic (discriminatory) tax effects, the per-element approach should be followed. [659] The correct interpretation of Article 24 is then to look at the particular domestic tax measure in isolation. This means that if a certain discriminatory measure forms part of the whole package regime regarding group taxation, that does not render inapplicable the possibility to apply the claim for the protection of the non-discrimination clauses in Article 24 to the particular measure at stake.[660] The major criticism to this approach is that it gives the possibility of cherry-picking some of the benefits of a regime without suffering the disadvantages of the package deal. Ultimately, this means that the removal of disadvantages via the application of non-discrimination provisions may lead to a better treatment of cross-border situations as compared with domestic situations. However, this argument is not persuasive as to deny the application of Article 24 in the context of a per-element approach. The non-discrimination article in tax treaties disallows disadvantageous treatment of certain (specific) cross-border situations but it does not constitute a principle of equality that precludes providing better treatment in relation to domestic situations.[661]

---

[658] See, for instance, the remarks by Otto Marres, "Beëindiging van rechtswege per 1 januari 2003 van fiscale eenheid met EG-dochtervennootschap. Weigering horizontale verrekening van (nadien geleden) verliezen van EG-dochtervennootschap is niet in strijd met EG-recht", in *BNB* 2010/22. In this regard Marres while taking a position of principle of rejecting a per-element approach still draws a difference whether the associated benefits are inherent or not to the fiscal unity. If the advantages are not in the essence of the fiscal unity regime Marres considers that the fiscal unity should not be used as a shelter for discriminatory treatment.

[659] See Jürgen Lüdicke in the comments to case I R 54, 55/10, Bundesfinanzhof, 9 February 2011, in *13 International Tax Law Reports*, p. 847.

[660] Concurrently, see Niels Bammens, who also (at least implicitly) appears to advocate a per-element approach and admits an isolated analysis of specific elements of group taxation. In his comment to the Luxembourg case concerning the fiscal integration previously analysed he concludes precisely in this sense when stating that:

> "*The fact that the claimants were unable to have the vertical aspect of the system applied to them should not affect their <u>entitlement under article 24(5) to those aspects of the system that can be applied</u>*" [underscore BdS].

Ultimately, Bammens concludes that an analysis of each specific element in isolation should be made irrespective of whether the measure ends up favouring foreign owned enterprises. See Bammens, *The Principle of Non-Discrimination in International and European Tax Law*, IBFD Doctoral Series no. 24 (2012), pp. 460-461. I agree with these last conclusions particularly considering the fact that the non-discrimination aims at removing the disadvantageous treatment and does not necessarily constitute a principle of equality. In this sense, if its application leads to favouring certain cross-border situations, that is a mere consequence of removing the prohibited discrimination provided by domestic law in the first place.

[661] See para. 14 of the Commentary to Art. 24 which sets out:

9.8 Interim conclusions

This Chapter analysed the application of the non-discrimination clauses of Article 24 to tax groups. As concluded before tax treaties do not address tax groups' situations although there are some references in its Commentary and in particular, as regards the application of Article 24.

Paragraph 1 does not provide any reference although it does include one example that confirms its application to tax group situations. It was demonstrated that this provision will apply in the case of companies that are resident in the same State but where a company is denied the possibility of being a group member because its nationality is from another State.

The OECD MTC Commentary to paragraph 3 of Article 24 appears to exclude the possibility of claiming tax treaty non-discrimination in the context of group taxation situations involving PEs. According to the OECD reasoning, this would be due to the fact that this paragraph relates only to the taxation of the profits of the PE itself. However, it was demonstrated by several examples that paragraph 3 does indeed apply to support the inclusion of PEs in tax groups. Essentially, the participation of a PE in a tax group related to the profits (and losses) of the PE itself. Therefore at least whenever the relationship of the PE with other group members affects the taxation of the PE itself, then such relation is relevant for the application of paragraph 3 to PEs in the context of group taxation regimes.

The application of the foreign ownership in paragraph 5 of Article 24 to tax groups requires once again determining whether this provisions is applicable at all in the context of group taxation and if so, to what extent, that is, effectively requiring extending groups to cross-border situations or differently, limited to the tax jurisdiction of each State involved.

It was submitted that the OECD MTC Commentary to Article 24 does not preclude its application to tax groups. In fact, its application to tax groups is quite relevant as demonstrated by several examples.

> "[…]t since the principal object of this clause is to forbid discrimination in one State against the nationals of the other, there is nothing to prevent the first State from granting to persons of foreign nationality, for special reasons of its own, or in order to comply with a special stipulation in a double taxation convention, such as, notably, the requirement that profits of permanent establishments are to be taxed in accordance with Article 7, certain concessions or facilities which are not available to its own nationals".

Similarly, see, *Klaus Vogel On Double Tax Conventions*, Ekkehart Reimer & Alexander Rust (eds.), 4th edition, (2015), para. 3 on the Commentary to Art. 24, or Alberto Xavier, Direito Tributario Internacional, 2a edicao Actualizada, Almedina (2007), p. 271.

The Commentary does indeed exclude situations where the application of Article 24 would lead to combining the effect of the taxation of the parent and subsidiary resident in two different States. In other words, taxpayers may not rely on the non-discrimination provision to claim extending group taxation to cross-border situations. This conclusion is logical considering that a fundamental distinction in tax treaties is between residents and non-residents and subject and not-subject to tax. Tax treaties allocate taxing rights and the interpretation and application of tax treaty non-discrimination should not affect such allocation. Ultimately, the extension of groups to cross-border situations could lead to some situations of double non-taxation, which could be contrary to the object and purpose of tax treaties. On the contrary, Article 24 is indeed applicable to extend the benefits of group taxation when the affiliated companies are resident in the same State. In that event, the State in which the companies are located is able to take into account both the losses and the profits and is the State that has jurisdiction to tax all its resident companies. This is particularly the case of grouping profits and losses between domestic subsidiaries held by a parent company resident in another State. Therefore, the foreign ownership provision should be applied to the extent that the distributive rules do not preclude the State that is applying the group taxation regime to take into account the results of the other member(s) of the group. This conclusion is applicable irrespective of the type of group taxation regime at stake.

The application of paragraph 4 of Article 24 may be applied to tax groups in the context of a per-element analysis.

Therefore, the question to be dealt with when analysing the application of tax treaty non-discrimination to group taxation regimes is whether the per-element approach is also possible in the context of tax treaties. It was submitted that it is possible to adopt a more liberal approach to the interpretation of non-discrimination in tax treaties that does not require identifying all facts but only a similarity in the relevant facts regarding the specific instance at stake. Therefore, for the construction of the comparator it is possible to take into account only the elements that are required for the application of the specific rule in question. As demonstrated through specific examples, by making a separate analysis for each element and restricting it to domestic effects would allow achieving a result which complies both with the wording and purpose of tax treaty non-discrimination. When the application of the non-discrimination clauses is limited to domestic effects (like for example in the case of interest deduction limitations) there is no shifting of profits or losses that affects the allocation of taxing rights under tax treaties nor does it go against the wording of Article 24.

Chapter 10

Alternative or Combined application of Non-discrimination provisions and Tax Groups

10.1 Introduction

As referred to previously, the existing non-discrimination provisions of tax treaties do not adopt a wide neutrality approach but rather, they constitute an incoherent collection of narrow clauses.[662] They only cover particular grounds of discriminatory tax treatment. In principle, they operate side-by-side[663] and there is no relation of speciality or prevalence of one paragraph over the other.[664] Each of the non-discrimination paragraphs of Article 24 has a specific scope which, in principle, does not overlap with the others.

The different paragraphs of the non-discrimination principle have different criteria for differentiation that require constructing different comparators and they provide for different standards of protection. Usually a different tax treatment will be based on a particular criterion and will be subject to treaty protection if such criterion is within of one of the paragraphs of Article 24. An analysis of competing or cumulative application of the various prohibitions of discrimination generally does not need to be addressed as typically domestic legislations discriminate based on a single relevant criterion.

However, it is perfectly conceivable for there to be situations of complex discrimination where the difference in treatment arises due to more than one criterion. In that event, multiple non-discrimination provisions are potentially applicable either separately or cumulatively when each of the reasons for the discriminatory treatment in the applicable domestic rule is covered by (more than) one particular provision. Its concurrent or simultaneous application will depend on whether each of the non-discrimination provisions itself remedies the discriminatory treatment or, differently, such discriminatory treatment is

---

[662] See Kees Van Raad, "Issues in the Application of Tax Treaty Non-Discrimination Clauses", *Bulletin* 8/9 IBFD (1988), p. 347.

[663] See Klaus Vogel, *On Double Taxation Conventions: A Commentary to the OECD, UN and U.S. Model Conventions for the Avoidance of Double Taxation of Income and Capital, With Particular Reference to German Treaty Practice*, third edition (1997) p. 1312

[664] See *Klaus Vogel On Double Tax Conventions*, Ekkehart Reimer and Alexander Rust (eds.), para. 9 on the Commentary to Art. 24, Werner Haslehner, *Das Betriebsstättendiskriminierungsverbot im Internationalen Steuerrecht,* Series on international tax law 58, Linde (2009), pp. 86-87, Claus Staringer, "Tax Treaty Non-Discrimination and EC Freedoms", in Michael Lang et al. (eds.) *Tax Treaty Law and EC Law*, Series on International Taxation, Vol. 30, Kluwer Law International, p. 231 or Gerald Toifl, IFA Report Austria "Non-discrimination at the crossroads of international taxation", *Cahiers de droit fiscal international* Vol. 93a (2008), p. 120.

due to a multiplicity of factors which requires the combined application of the non-discrimination provisions in order to remedy the disadvantage. In all events, the interaction of non-discrimination tax treaty provisions will require considering that arguably the paragraphs of Article 24 provide for a different degree of protection.[665]

It is also possible that the discriminatory treatment is protected by multiple agreements since discriminatory treatment is prevented not only in tax treaties. For the purpose of this analysis, relevant is the interaction of tax treaties and EU Law considering that the different aim and scope provides also for its alternative or combined application.[666]

Therefore, possibilities of interaction of non-discrimination provisions may arise from:

i. *Alternative application of non-discrimination provisions*: a particular domestic law violates more than one non-discrimination provision being that each provision is able, by itself to remedy the disadvantageous treatment. This situation may involve the separate application of different non-discrimination provisions of a tax treaty or the parallel or alternative application of non-discrimination provisions in tax treaties and EU law. In this event, the taxpayer is entitled to choose one of those provisions or claim, alternatively, the protection of either of them. As the discriminatory treatment falls within the scope of either rule, the alternative claim will entitle the application of the rule that affords the higher degree of protection. In this scenario, the interaction of non-discrimination provisions is merely apparent: as each rule applies independent from each other, their application is merely alternative rather than combined.

ii. *Cumulative application of non-discrimination provisions*: in this case, the particular domestic law also violates more than one non-discrimination provision but each provision is unable, by itself, to remedy the discriminatory treatment. Therefore, scenarios may involve the simultaneous application of non-discrimination provisions of the same tax treaty, different tax treaties and finally, the combined application of both tax treaty and EU law non-discrimination.

10.2 Interaction of non-discrimination tax treaty provisions

10.2.1 Alternative application

The alternative or concurrent application of non-discrimination clauses is uncommon. As referred to, given that the clauses of Article 24 address specific situations, each one of them

[665] See *infra* 8.5.2.

[666] See on this, Werner Haslehner, "Tackling complex discrimination in international taxation", *British Tax Review* 5 (2012), p. 599.

providing for different circumstances of protection, they are unlikely to give rise to the concurrent application of such clauses.

A possible scenario claiming the protection of different non-discrimination clauses may be conceived when the targeted legislation provides for alternative conditions for its application. For instance,[667] if, in order to apply an exemption on dividends received, the tax legislation requires that the recipient of the income is either national *or* resident of the same State of the company (State X). If a national and resident of a different State (State Z) carries on an activity in State X through a PE located there, being the participation in the company also located in State X allocated to such PE he could avail himself of the protection of either the nationality or the PE non-discrimination clauses. In fact, in either case, by comparison with a national of State X (but resident in another State) or a resident in State X, the taxpayer would be subject to *more burdensome taxation* or the taxation of the PE would be *less favourably levied*. By deeming all relevant circumstances to be identical except the one giving rise to the less favourable treatment, one or the other non-discrimination clauses are able to remedy the taxpayer's situation. The alternative application is possible since the legislation provides for two different (but non-cumulative) requirements either of which is covered by a non-discrimination clause. In all events, these cases do not constitute an *actual* (but *merely apparent*) concurrent application,[668] since while both provision remedy the disadvantageous treatment, they tackle different requirements of the discriminatory legislation. In other words, there are two different discriminations at issue, each of which to be solved separately by the respective non-discrimination clause.

An interesting example of the alternative application of two non-discrimination clauses of the same tax treaty arose in the Canadian *Saipem*[669] case.[670] The taxpayer was a UK resident company (Saipem UK), member of the same group of companies as another company – Saipem Energy International (SEI) also resident in the UK. Saipem UK acquired the shares of this other UK company, which then became its direct subsidiary. The subsidiary carried on business in Canada through a PE, but made substantial losses and was eventually wound up into Saipem UK. Saipem UK claimed a deduction of the subsidiary's losses against its income attributable to its Canadian PE. According to the Canadian tax law, losses incurred by a 90% or more owned subsidiary flow through its parent corporation

[667] See Werner Haslehner, *Das Betriebsstättendiskriminierungsverbot im Internationalen Steuerrecht,* Series on international tax law 58, Linde (2009), pp. 82-83.
[668] See Niels Bammens, *The Principle of Non-Discrimination in International and European Tax Law*, IBFD Doctoral Series no. 24 (2012), pp. 488-489.
[669] Tax Court of Canada, *Saipem UK Limited v The Queen*, [2011 TCC 25], 13 *International Tax Law Reports* pp. 454-481. The judgement was upheld by the Federal Court of Appeal in its judgement of 6 September 2011 [2011 FCA 243].
[670] For an overview of the case, see Brian J. Arnold, "Tax Treaty News", *Bulletin for International Taxation* 7 IBFD (2011), p.p. 370-371 or Andrew Stirling, "Tax Discrimination: Relief Under Canada's Tax Treaties?", 59 *Canadian Tax Journal* 2 (2011), pp. 322-330.

on a liquidation. However this applies only if both the parent and subsidiaries are "Canadian corporations". A "Canadian corporation" was defined under domestic law as one that is resident in Canada and met one of the following requirements: (i) had been incorporated in Canada, or (ii) had been resident there since 1971. The claim was disallowed on the ground that this requirement was not met. Saipem UK, although admitting that neither it nor its subsidiary were a Canadian corporation, considered that the Canadian corporation requirement was in breach of the nationality non-discrimination and the PE non-discrimination clauses of the UK-Canada tax treaty.

The Tax Court ruled against the taxpayer. Regarding the discrimination based on paragraph 1, it held that the inability to carry forward the losses of the UK-resident subsidiary was discrimination on grounds of residence and not of nationality. In particular, it referred to the fact that the second requirement referred to above did not contain a nationality requirement. In addition, it referred to the fact that residency in Canada could also be determined based on the control and management test. Therefore, it concluded that the relevant criterion was residence rather than nationality. In regard to the PE discrimination, the reasoning of the Court is less clear. The argument of the taxpayer was that the denial of the flow-through of the losses was discriminatory because the non-discrimination clause would preclude less favourable taxation in Canada of a PE of a UK resident company. The Court rejected this argument based on the scope of protection of the PE non-discrimination clause. The losses had been created by another company and according to the Court, this clause only concerned the taxation of the PE's own activities and did not take into account relationship with other enterprises, notably regarding transfer of losses. This reasoning was supported by reference to the amended Commentary to the 2008 OECD MTC on Article 24.[671] As stated above regarding similar issues on the foreign ownership clause and the statements of the OECD commentary on consolidation, I believe this to be a too narrow interpretation of the non-discrimination clauses.[672]

As stated above, in principle and since each tax treaty non-discrimination clause has a narrow scope and addresses a particular case, there is no overlapping of different clauses applying to the same situation. But in the particular case[673] of paragraphs 4 and 5 of Article

[671] Although in the end, the decision of the Court appears to infer that the limitation of the losses concerning the PEs own activities derives from Article 7. Since the deduction was not allowed under article 7 there was no violation of the PE non-discrimination clause. This naturally raises the issue of the relationship between the distributive rules and the non-discrimination article previously discussed in 8.3 *supra*.

[672] Similarly, see Niels Bammens, *The Principle of Non-Discrimination in International and European Tax Law*, IBFD Doctoral Series no. 24 (2012), pp. 386-387, or Werner Haslehner, "Tackling complex discrimination in international taxation", *British Tax Review* 5 (2012), p. 604, footnote 29.

[673] Another exceptional case is referred to by Kees Van Raad regarding the application of both paragraphs 3 and 5. The example is based on the Netherlands limited partnership (*commanditaire vennootschap*) and the concurrent application arises due to the conflicts on entity characterization. See Kees Van Raad, *Nondiscrimination in International Tax Law*, Series on International Taxation no. 6, Kluwer Law and Taxation Publishers (1986), pp. 192-194.

24, it appears possible to apply each of those clauses to the same situation,[674] that is, based on a single reason for the disadvantageous treatment: the non-deduction of certain payments. The typical example is interest deduction limitation rules - which target only cross-border payments - in the case of loans granted by a foreign parent company to its subsidiary. Paragraph 4 is applicable, as it requires interest paid to a foreign entity to be deducted in the same circumstances as interest paid in a domestic situation. Paragraph 5 could also apply, as an enterprise of one State should not be subject to other or more burdensome taxation due to the fact that it is owned or controlled by a company resident in the other State. In other words, while paragraph 4 prohibits the disallowance of deductions for payments made to non-residents being expressly subject to domestic legislation, which meets the arm's length requirements, paragraph 5 would consider discriminatory any disallowance of deductions in circumstances where the company is controlled by non-residents without any express qualification by arm's length exceptions. The OECD recognized this potential overlap of these two clauses. It concluded[675] that paragraph 5 was in fact also relevant to thin capitalization but, since it was drafted in more general terms, it would take second place to paragraph 4 as a more specific provision. Therefore, the position assumed by the OECD was that paragraph 4 constituted *lex specialis* over paragraph 5.[676] This was subject to criticism:[677] while paragraph 4 is indeed more specific as it applies only to payments of interest, royalties and other disbursements and contains an (express) exception adjustments in accordance with the arm's length principle, it could also be argued that paragraph 5 is more specific as regards payments of interest to a non-resident shareholder.[678] Paragraph 5 could constitute *lex specialis* when compared with paragraph 4 which would apply to payments made to any non-resident.

---

[674] See, *inter alia*, Niels Bammens, *The Principle of Non-Discrimination in International and European Tax Law*, IBFD Doctoral Series no. 24 (2012), pp. 386-387, Werner Haslehner, "Tackling complex discrimination in international taxation", *British Tax Review* 5 (2012), pp. 609-610, Alexander Rust, "International Tax Neutrality and Non-Discrimination – A Legal Perspective", in M. Lang et al (eds.) *Tax Treaties: Building Bridges between Law and Economics*, IBFD (2010), pp. 643-644 or Luc de Broe, *International Tax Planning and Prevention of Abuse: A Study under Domestic Tax Law, Tax Treaties, and EC Law in Relation to Conduit and Base Companies*, IBFD Doctoral Series Vol. 14 (2008), pp. 560-564.

[675] See paragraph 66 of the OECD Report on Thin Capitalisation, of 26 November 1986, available in OECD *Model Tax Convention on Income and Capital 2010: Full Version* (OECD Publishing 2012). This statement was also included in paragraph 58 of the Commentary to Article 24 of the OECD MTC.

[676] See Klaus Vogel, *On Double Taxation Conventions: A Commentary to the OECD, UN and U.S. Model Conventions for the Avoidance of Double Taxation of Income and Capital, With Particular Reference to German Treaty Practice*, third edition (1997) p. 1337.

[677] See, Luc de Broe, *International Tax Planning and Prevention of Abuse: A Study under Domestic Tax Law, Tax Treaties, and EC Law in Relation to Conduit and Base Companies*, IBFD Doctoral Series Vol. 14 (2008), pp. 560-564, Detlev J. Piltz, IFA General Report "International Aspects of Thin Capitalization", *Cahiers de droit fiscal international*, Vol. 81b (1996), p. 134, or Fred C. de Hosson and Geerten M.M. Michielse, "Treaty Aspects of the 'thin capitalisation' issue – A review of the OECD Report", *Intertax* 11 (1989), p. 483.

[678] See John F. Avery Jones, et al., "The Non-Discrimination Article in Tax Treaties-I", *British Tax Review* (1991), p. 421.

The subsequent changes to the Commentary[679] placed a different emphasis on the relation between these two paragraphs. It sets out:[680]

> "Since the paragraph prevents the discrimination of a resident enterprise that is solely based on who owns or controls the capital of that enterprise, it would not *prima facie* be relevant with respect to rules that provide for a different treatment of an enterprise based on whether it pays interest to resident or non-resident creditors. The paragraph is not concerned with rules based on a debtor-creditor relationship as long as the different treatment resulting from the rules is not based on whether or not non- residents own or control, wholly or partly, directly or indirectly, the capital of the enterprise. For example, if under a State's domestic thin capitalisation rules, a resident enterprise is not allowed to deduct interest paid to a non-resident associated enterprise, that rule would not be in violation of paragraph 5 even where it would be applied to payments of interest made to a creditor that would own or control the capital of the enterprise, provided that the treatment would be the same if the interest had been paid to a non-resident associated enterprise that did not itself own or control any of the capital of the payer. Clearly, however, such a domestic law rule could be in violation of paragraph 4 to the extent that different conditions would apply for the deduction of interest paid to residents and non-residents […]"

Therefore, currently the application of either paragraph 4 or 5 depends on identifying the proper *ground for the discriminatory treatment.*[681] If the deductibility of the payment is denied due to the fact that the company is owned or controlled by a resident of the other Contracting State (company-shareholder relationship), paragraph 5 is applicable;[682] if the

---

[679] For an overview of the 20008 amendments regarding the non-discrimination article, see Silke Bruns, "Taxation and Non-Discrimination: Clarification and Reconsideration by the OECD", *European Taxation* 9 IBFD (2008), pp. 484-492.

[680] See paragraph 79 of the Commentary to Article 24 of the OECD MTC included with the 2008 amendments.

[681] This means that it must be established what is the cause for the application of the thin capitalization rules under domestic laws in order to determine which non-discrimination rules apply. The point is then to determine what is the essential condition for the application of the interest deduction limitations. For instance, in the case of a thin capitalization regime which has multiple conditions for application being that the critical condition for its application is foreign ownership, then paragraph 5 will apply since the condition of the capital being owned by residents of another State is the fundamental condition or the ground for the application of the rule. See, John F. Avery Jones et al., "Art. 24 (5) of the OECD Model in Relation to Intra-Group Transfers of Assets and Profits and Losses", 3 *World Tax Journal* June (IBFD) 2011, p. 214 or Craig Ecliffe, "Unfinished Business: Domestic Thin Capitalization Rules and the Non-discrimination Article in the OECD Model", *Bulletin for International Taxation* 1 IBFD (2013), p. 35.

[682] This distinction was made by the US Court of Appeals for the 7th Circuit in *Square D Company and Subsidiaries v Commissioner of the Internal Revenue Service*, Case no. 04-4302, of 13 February 2006 in which was stated:

> "The regulation requires that all interest payments to foreign related party must use the cash method of accounting without regard to the nationality of the owner. The regulation does not impose the cash method simply because of foreign ownership, which would be prohibited, but rather for payments to a foreign related party. […] The requirement, therefore, hinges on the nationality of the related party to whom the payment goes and does not fluctuate based on nationality of the ultimate owner. It is merely fortuitous that, in this

deduction of the payment is denied because the recipient is in the other Contracting State (debtor-creditor relationship), then paragraph 4 applies.[683] In principle, the application of one or the other clauses is able to remedy the discriminatory treatment depending on the relevant factor for different treatment in the scrutinized legislation. Nevertheless, it still seems to be possible to conceive a situation where there is an interaction between both paragraphs.[684] In case of legislation which restricts the deduction of interest to payments made: (i) to domestic recipients *and* (ii) the payer being held or controlled also by residents of the same State. The separate or alternative application is unable to remedy the different treatment as the applicable legislation provides for the cumulative requirements which are dealt with separately by each of the clauses referred to of Article 24.

Finally, there is the additional question of whether, if there are to be interest deduction limitation rules applicable only where entities in a State are controlled by non-residents whether, the arm's length exception is similarly applicable under paragraph 5 as it is in paragraph 4. In other words: do interest deduction rules which operate on the basis of the non-resident foreign ownership apply without any limitation or are they also subject to the qualification of the arm's length standard? Do paragraphs 4 and paragraph 5 have the same threshold standard? Clearly the wording of the provision does not provide for such a limitation. The OECD acknowledged in its *Thin Capitalisation* report of 1986[685] that the Commentary did not address this issue. Later in 2008, the OECD decided to clarify this point concluding that interest deduction limitation rules do not violate paragraph 5 to the extent that they merely result in arm's length adjustments to profits. Accordingly, and with reference to an interpretation of the foreign ownership non-discrimination in light of the context of the whole treaty as determined by Article 31 (1) VCLT, the following wording was added to paragraph 79 :

> […] since the provisions of paragraph 1 of Article 9 or paragraph 6 of Article 11 form part of the context in which paragraph 5 must be read (as required by Article 31 of the Vienna Convention on the Law of Treaties), adjustments which are compatible with these provisions could not be considered to violate the provisions of paragraph 5.

Thus, the OECD conclusion is that paragraph 5 is also constrained by the arm's length standard exceptions similar to paragraph 4. This can be derived from a contextual interpretation of tax treaties: ultimately if Contracting States want that relations between

---

case, the foreign related party to which the payment was made also happened to be the owner."

[683] Since most of the thin capitalization rules are based on the debtor/creditor relationship, the potential scope of application of paragraph 5 as regards this type of interest deduction limitation rules becomes less relevant.

[684] See this example by Werner Haslehner, "Tackling complex discrimination in international taxation", *British Tax Review* 5 (2012), p. 609.

[685] See paragraph 46 of the OECD Report on Thin Capitalisation, of 26 November 1986, available in OECD *Model Tax Convention on Income and Capital 2010: Full Version* (OECD Publishing 2012).

associated enterprises to comply with the arm's length standard it is unlikely that such rules would be tackled by the foreign ownership non-discrimination clause.[686]
Still, the amendment to the 2008 Commentary raises several questions. First of all, whether these exceptions do indeed apply when one compares the express wording in the text of paragraph 4 with the absence of such wording in paragraph 5.[687] In fact, while a contextual interpretation is generally accepted as regards main rules and principles it is hardly also accepted for exceptions to those rules. In other words, it is hardly disputable that an expressly stated exception to one rule – in paragraph 4 - can also be derived from a contextual interpretation as an exception to other main rule[688]. In addition and even assuming that the position sustained by the OECD applies, there is the additional issue of whether the 2008 Commentaries apply to previously concluded treaties.[689]

10.2.2 Cumulative application in the same Tax Treaty

In fact, another scenario is where the granting of certain tax advantages is dependent on the cumulative application of two (or more) non-discrimination clauses of the same tax treaty.

---

[686] Niels Bammens, "Article 24 (4) and 24 (5) of the OECD Model Applied to Domestic Thin Capitalization rules", *World Tax Journal* June 2013 IBFD, p. 171.

[687] Similarly, see Klaus Vogel *On Double Tax Conventions*, 4th edition Ekkehart Reimer and Alexander Rust (eds.), para. 112 on the Commentary to Art. 24, maintaining that the exception in para. 4 can actually be used as a *contrario* argument. As para. 5 does not contain a caveat in contrast to Article 24(4) OECD and the UN MC it can be concluded that the scope of the foreign ownership provision is not restricted by the arm's length principle. The author further questions the priority of the arm's length principle under para. 5 from a tax policy perspective.

[688] See Otto Marres, "Interest Deduction Limitations: when to apply Articles 9 and 24 (4) of the OECD Model Convention?", in D. Weber (ed.) *Non-discrimination in tax treaties: selected issues from a global perspective* IBFD, Amsterdam (forthcoming).

[689] On the topic of the value of later commentaries to interpretation of previously concluded treaties, some scholars support a static interpretation in the sense that later amendments cannot be used to establish the intentions of the parties on the previously concluded treaties. See Michael Lang & Florian Burger, "The role of the OECD Commentary in Tax Treaty Interpretation", 23 *Australian Tax Forum* 2008, pp. 106-107. Other views purport an ambulatory interpretation of the treaty provisions. In general on this subject, see Richard Vann, "Interpretation of Tax Treaties in New Holland", in H. van Arendonk (et al) *A Tax Globalist: The Search for the Border of International Taxation: Essays in Honour of Maarten J. Ellis*, IBFD on-line (2005), or Frank Engelen, *Interpretation of Tax Treaties under International Law: A study of Articles 31, 32 and 33 of the Vienna Convention on the Law of Treaties and their application to tax treaties,* IBFD Doctoral Series no. 7 (2004), pp. 445-449. In this regard David A. Ward, "Is There an Obligation in International Law of OECD Member Countries to Follow the Commentaries on the Model?", in Sjoerd Douma & Frank Engelen (eds.) *The Legal Status of the OECD Commentaries, Conflict of Norms in International Tax Law Series*, Vol. 1 IBFD (2008), pp. 86-87 states that later Commentaries can only be relevant in case they represent a fair interpretation of the text of the Commentary. Otherwise, they have diminished or no value. Specifically on this issue, for instance, Craig Ecliffe suggests that up to 1986 paragraph 5 would potentially apply without any limitation. See Craig Ecliffe, "Unfinished Business: Domestic Thin Capitalization Rules and the Non-discrimination Article in the OECD Model", *Bulletin for International Taxation* 1 IBFD (2013), pp. 37-38. As from that date on, the arm's length exception would apply. In my view and considering the multiple amendments made after 1986 to the OECD Commentary, the value of the 2008 addition should be considered only from that date, and not retrospectively.

In those cases, the application of one tax treaty non-discrimination does not remove the discriminatory treatment and then the issue is whether several clauses can be applied simultaneously.
In the example provided above, paragraph 5 does not resolve the disadvantageous treatment because the interest deduction limitation is not only (but also) due to the foreign residence of the shareholders. Conversely, paragraph 4 is also insufficient because the interest is not deductible simply because the recipient would be resident in the State of the payer. The existence of two cumulative requirements under the applicable legislation requires that both non-discrimination clauses are applied together.

The obvious question is whether it is possible to combine the effects of non-discrimination clauses of the same treaty. As held, they were developed independently and have no relation to each other. But the fact is, that if a State has made a commitment against two types of different discrimination clauses in the same tax treaty, there seems to be nothing to prevent their combined application.[690] If a State signs a tax treaty modelled on the OECD Article 24, it is assuming that it will not provide discriminatory treatment to its treaty partner on the specific grounds covered by the different clauses of the non-discrimination article, irrespective of their being applied separately or cumulatively. The combined application of the clauses does not change the wording and nature[691] of the mandate expressed in the first sentence of the Commentary to Article 24 as one is precisely dealing *with the elimination of tax discrimination in certain precise circumstances*.

Another possibility involving the combined application of non-discrimination clauses may be based on a variation of the example above: assume that legislation of a particular State requires, for the application of an exemption on dividends received, that the recipient of the income is both a national *and* resident of the same State of the company (State X). Also in this case, the separate application of either paragraph 1 or paragraph 3 is insufficient to remedy the different treatment, because the application of the benefit is conditional on two factors which are not covered by either paragraph 1 (residence requirement) or paragraph 3 (nationality requirement). Also in this case, both clauses[692] should be applied together.[693]

---

[690] John F. Avery Jones, et al., "Art. 24 (5) of the OECD Model in Relation to Intra-Group Transfers of Assets and Profits and Losses", *World Tax Journal* June, IBFD (2011), p. 216-217.
[691] Concurrently, see Niels Bammens, *The Principle of Non-Discrimination in International and European Tax Law*, IBFD Doctoral Series no. 24 (2012), p. 490.
[692] Other possible examples could be to include, for example, the combination of paragraph 1 with either paragraph 4 or paragraph 5. Differently, it seems impossible to combine paragraph 1 with paragraph 2 as argued by Niels Bammens, *The Principle of Non-Discrimination in International and European Tax Law*, IBFD Doctoral Series no. 24 (2012), p. 491.
[693] See Werner Haslehner, *Das Betriebsstättendiskriminierungsverbot im Internationalen Steuerrecht,* Series on international tax law 58, Linde (2009), pp. 93-95.

A further example, now within the scope of tax groups, is to conceive a situation in which the application of the regime is dependent on companies being both incorporated and resident for tax purposes in the same State.

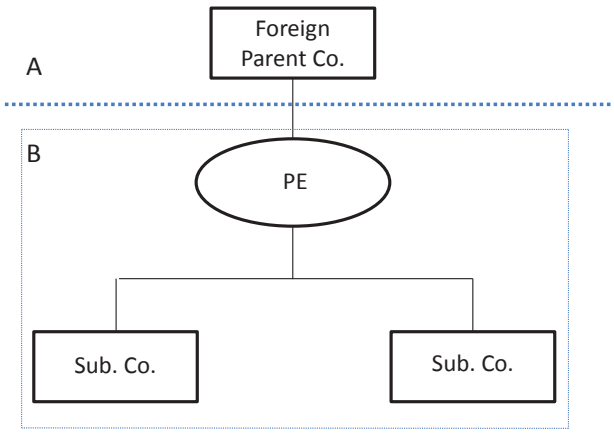

Assuming a scenario of a domestic PE of a foreign company that claims the inclusion in group taxation with the two subsidiaries resident in same State, the individual application of the non-discrimination clauses is unable to resolve the issue. In the case the taxpayer claims the benefit of paragraph 1, the requirement of the company's nationality – place of incorporation – is not sufficient to remedy the fact that one of the relevance circumstances for the application of paragraph 1 is not met: the residence in the same State. Similarly, the protection of the PE non-discrimination clause is also not possible as although it would remedy the residence requirement, the nationality requirement would be lacking to extend the application of the group taxation regime. However, and in this case, considering the combined application of both clauses will allow the taxpayer to successfully invoke his claim while constituting an appropriate application of the tax treaty. As further elaborated below, the adequate construction of the comparison requiring all relevant circumstances, apart from the one being argued by the taxpayer under the particular treaty provision, to be the same. This requires building the comparison considering not only the domestic law aspects but also any consequences deriving from tax treaties, that is, the proper consideration of the effect of other tax treaty non-discrimination provisions other than the one being claimed by the taxpayer.

The proposed methodology for the combined application of non-discrimination rules is based on a two-step approach.[694] The underlying premise is that the relevant comparator is

[694] This methodology is developed by Werner Haslehner in "Tackling complex discrimination in international taxation", *British Tax Review* 5 (2012), pp. 598-601. Haslehner expands on the possibility of applying cumulatively tax treaty non-discrimination clauses, based on the following approach: (i) the taxpayer can choose to claim any applicable non-discrimination clause of a tax treaty; (ii) the application of a non-discrimination clause requires identifying the correct comparator in that clause followed by an inquiry into its

an hypothetical taxpayer which is in the same relevant circumstances as the real taxpayer except the requirement is which is being claimed under the particular non-discrimination rule. As said, when determining the proper comparator, this requires that this is treated in accordance with all the applicable tax laws. Therefore, the lawful taxation of the comparator – which includes the applicable tax treaty non-discrimination clauses – is a previous and necessary step before performing the discrimination test.[695]
The following scenario exemplifies this two-step approach for the combined application of the non-discrimination rules:

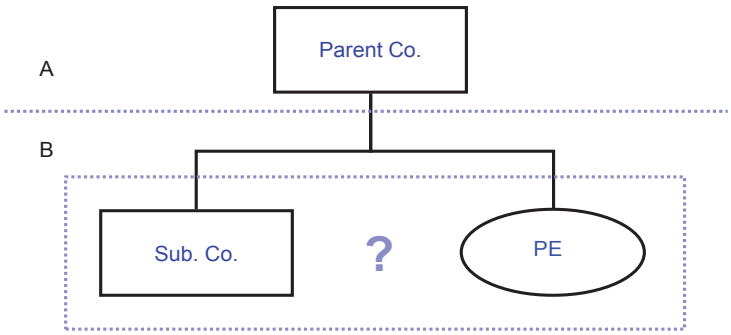

Let us assume that both entities in State B want to consolidate their results. Possible arguments for the tax authorities of that State to reject this claim would be: (i) the parent company is resident in another State, and (ii) the PE is also not a resident in State B. The separate application of the non-discrimination clauses of the tax treaty concluded between States A and B is unable to resolve this disadvantageous treatment. Under Article 24 (3), treating the PE as a company resident in State B would not resolve the other reason for denying the consolidation which is the foreign residence of the parent company. Similarly, applying Article 24 (5) would not be the only relevant reason for the discriminatory treatment because, even if the parent company would be resident in State B, still it would not be possible to consolidate the results between the subsidiary and the PE. However, applying the two-step approach would lead to a different result: determining the relevant comparator for the purpose of paragraph 5 involves, as a first step, the application of all relevant provisions including tax treaty non-discrimination clauses. The proper comparator

appropriate comparator in order to determine the standard to which the taxpayer's burden has to be compared; (iii) the appropriate comparator is determined based on a hypothetical taxpayer who is in identical circumstances except the criterion of the invoked non-discrimination clause and (iv) the tax treatment of that comparator should be determined by reference to the law applicable to that hypothetical taxpayer including all the applicable non-discrimination clauses. See Werner Haslehner, "Nationality Non-discrimination and Article 24 OECD – Perennial Issues, Recent Trends and New Approaches", in D. Weber (ed.) *Non-discrimination in tax treaties: selected issues from a global perspective* IBFD, Amsterdam (forthcoming).

[695] In fact, as referred to by Haslehner, "*making tax-treaty-compliant taxation*" is actually the relevant baseline for non-discriminatory treatment. A taxpayer should not be subjected to discriminatory taxation which violates any of the non-discrimination clauses. See Werner Haslehner in "Tackling complex discrimination in international taxation", *British Tax Review* 5 (2012), p. 601.

requires in this case applying paragraph 3, that is, treating the PE as a subsidiary of that State. After this preliminary step, the discriminatory test for the purpose of paragraph 5, that is, performed through replacing the foreign parent with a hypothetical domestic parent company. Again, this interpretation is totally supported by the wording of paragraph 5 of Article 24. The reference to "*enterprises of a Contracting State*" must also comprise notional resident enterprises by virtue of the application of the PE non-discrimination clause.[696] Conversely, the PE non-discrimination would require that the same result is obtained irrespective of whether the parent company operates in the other State through a subsidiary or through a PE.

The same outcome would be achieved in the following situation of parent company with a foreign subsidiary which, in turn, has a PE in the same State of the parent company. Both company A and the PE from company B want to consolidate their income in State X while claiming the application of the applicable tax group regime.

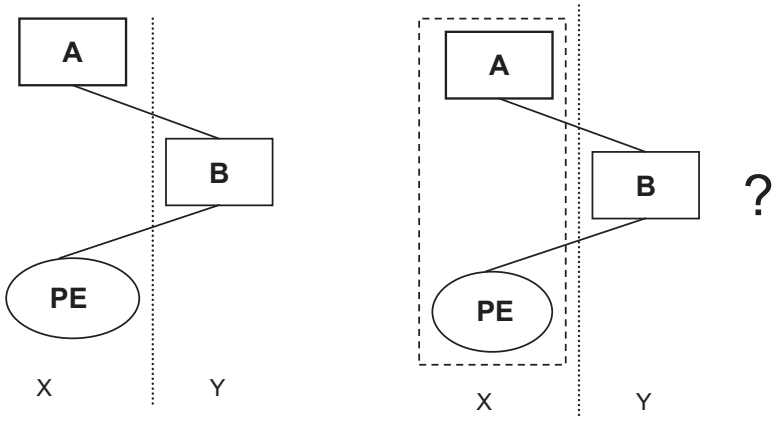

In this situation, once again the tax authorities of State X may deny such claim considering that: (i) the intermediate company (company B) is resident in another State (State Y), and (ii) the PE is also not a resident in State X. The separate application of the non-discrimination clauses of the tax treaty concluded between States X and Y are unable to resolve this disadvantageous treatment. Under Article 24 (3), treating the PE as a company resident in State X would not resolve the other reason for denying the consolidation which is the foreign residence of the intermediate company. Similarly, applying Article 24 (5) would not be the only relevant reason for the discriminatory treatment because, even if the

[696] See Kees van Raad, "Non- discrimination under tax treaties regarding groups of companies", in G. Maisto, (ed.), *International and EC Tax Aspects of Groups of Companies* - EC and International Tax Law Series, Vol. 4, IBFD (2008), pp. 164-165. Van Raad, however does not expressly also support the view of combined application of non-discrimination tax clauses either of the same treaty or of different tax treaties.

intermediate company should be in State X, it would still not be possible to consolidate the results of the PE. However, applying the two-step approach would lead to a different result: determining the relevant comparator for the purpose of paragraph 5 involves, as a first step, the application of all relevant provisions including tax treaty non-discrimination clauses. In this case, the proper comparator requires applying paragraph 3, that is, treating the PE as a subsidiary of that State. After this preliminary step, the discriminatory test for the purpose of paragraph 5, that is, performed by replacing the foreign intermediary company with a hypothetical domestic company. This step approach which involves the combined application of non-discrimination clauses is totally appropriate, considering the purpose and nature of Article 24.

Important to note is whether the combined application of non-discrimination clauses may lead to overcoming the different standards of protection of those clauses.[697] The scope of paragraph 3 is *less favourable taxation* whereas paragraph 5 covers *other or more burdensome taxation and connected requirements*. The question is then whether combining both these clauses should have the limitation of to the lowest degree of protection which, in this case, is the PE non-discrimination clause. The argument is logical because only then would the taxpayer fall within the scope of both non-discrimination clauses and such clauses can be successfully invoked. Therefore in these examples, if through the consolidation between the subsidiary and PE, the PE would pay less tax, there would be a violation of the non-discrimination clauses. The fact that the PE could not participate in the consolidation would lead to a higher tax burden, which would constitute less favourable taxation. In the typical example of offsetting profits with losses, the PE would be in a profitable situation while the other company to be included in the tax group perimeter would be loss making. In that case, rather than the PE being taxed on its own profit, the consolidation of the income through the application of the tax group regime basis will allow him to offset its profits with the other group member losses thus being subject to a lower tax base. In other words, the different treatment of the PE in this case would lead to *less favourable taxation* under paragraph 3, which should be the relevant standard to ascertain the existence of discriminatory treatment through the combined application of these non-discrimination clauses rather than *other taxation and connected requirements*[698] in accordance with paragraph 5 which, although applicable simultaneously in this scenario, provides for a different (higher) standard of protection. The doubtful point here is precisely the opposite situation in which the PE is loss making while the subsidiary to be included within the group is profit making. In that event, the consolidation would not give rise to the PE paying less tax.[699]

---

[697] Werner Haslehner in "Tackling complex discrimination in international taxation", *British Tax Review* 5 (2012), pp. 602 and 613.

[698] For the interpretation of the term 'other taxation within the scope of group consolidation regimes', see *supra* in 9.3.1.4 the analysis regarding the *Felixstowe Dock* case.

[699] Other arguments have been raised against this particular case of allowing transfer of profits from a domestic subsidiary to a PE due to potential loss of the subsequent dividend withholding tax. See Hugh Ault and Jacques Sasseville, "Non-Discrimination: A Reconsideration", 2 *World Tax Journal* IBFD (2011), p. 112

A traditional approach[700]in the interpretation of the meaning of less favourable taxation would deny the possibility to claim discriminatory treatment under paragraph 3 and the consequence formation of the tax group, given that denying the inclusion of the PE would actually lead to paying no tax at all. Following this interpretation, under paragraph 3 there would be no discrimination because the difference in treatment would not be *less favourable taxation* but rather, *other taxation*[701], which is not protected under the PE non-discrimination clause.[702]

The alternative approach[703] is to give a more purposeful interpretation to the protective standard under paragraph 3. This would mean, as previously analysed,[704] that less favourable taxation would include all elements of the domestic tax system except the ones that constitute inherent differences between a PE and a subsidiary. Therefore, it should be possible to claim that since paragraph 3 applies to taxation which comprises all elements of the tax system, even if there is no direct tax benefit from the PE itself, (that is, in a situation where the PE was loss-making) a tax group is still an element of the tax system which is therefore comprised within the scope of protection of the PE non-discrimination.

10.2.3 Cumulative application in different Tax Treaties

A step further in this analysis is whether it may be possible to combine different non-discrimination clauses of different tax treaties. There seems to be nothing to prevent simply denying such simultaneous application.[705] A possible starting point would be once again to perform the two-step approach, as already proposed for the combined application of non-discrimination of the same treaty. Naturally that the argument against this combined application may derive from the reference that the non-discrimination article should not be interpreted as to require most-favoured-nation treatment[706] due to the fact that the tax benefits granted under a particular agreement derive from the specific economic

---

and American Law Institute, *Federal Income Tax Project: United States Income Tax Treaties* (1992), pp. 280-281.

[700] See *supra* in 8.6.6.2.

[701] For the interpretation of the term " other taxation within the scope of group consolidation regimes", see above the analysis regarding the *Felixstowe Dock* case.

[702] Similarly, see Klaus Vogel *On Double Tax Conventions*, Ekkehart Reimer and Alexander Rust (eds.), para. 66 on the Commentary to Art. 24

[703] A further alternative developed below is to adopt an integrated view when dealing with tax groups in order to take into account the position of the whole group.

[704] See *supra* 8.5.2.2.2. as regards the interpretation of paragraph 3 of Article 24.

[705] Similarly, supporting the application of the non-discrimination provisions of several treaties at the same time, see Klaus Vogel *On Double Tax Conventions*, Ekkehart Reimer and Alexander Rust (eds.), para. 9 on the Commentary to Art. 24.

[706] For a reference to this argument see John F. Avery Jones, et al., "Art. 24 (5) of the OECD Model in Relation to Intra-Group Transfers of Assets and Profits and Losses", *World Tax Journal* June, IBFD (2011), p. 221.

relationship between those Contracting States.[707] While this is necessarily correct, I believe that this reference essentially refers to particular tax benefits under the distributive rules or to what circumstances may or not give rise to a PE or other special provisions included in a particular tax treaty. More clearly, in the case two different tax treaties have an identical non-discrimination article, it seems possible to claim the combined application of non-discrimination clauses of each of those treaties.[708]

An example can be illustrated based on the following decision of the Finish Supreme Administrative Court.[709] The case involved a parent company resident in the Netherlands holding Finish and Swedish subsidiaries. The Swedish company had a PE in Finland and pretended to make a group contribution in favour of the Finish subsidiary.

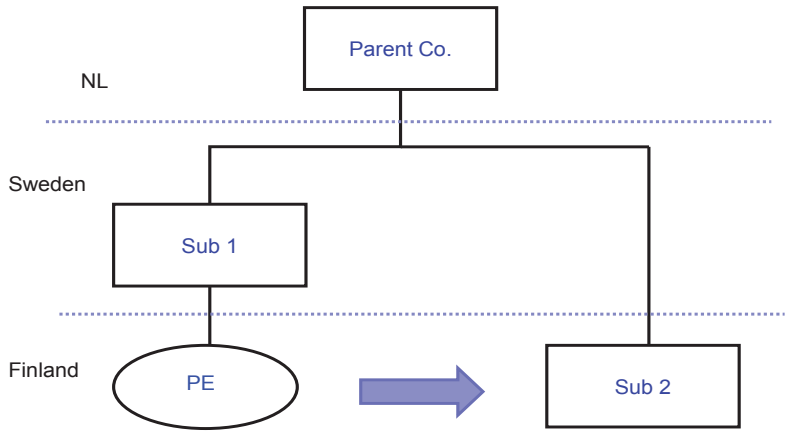

The Finish Supreme Court accepted the combination of both Article 24 (3) of the Nordic Treaty – necessary for treating the Finish PE as a Finish subsidiary – and Article 24 (5) of the tax treaty between Finland and the Netherlands - in order to treat the parent company as resident in Finland.

In general, I favour the combined application of tax treaty non-discrimination clauses. There seem to be no blatant arguments that forbid it in these situations: the effects of allowing group taxation benefits are limited to the respective tax jurisdiction. In the end, this does not compromise either the allocation of taxing rights or the balance achieved

[707] See paragraph 2 of the Commentary to Article 24 of the OECD MTC.
[708] Similarly, Werner Haslehner in "Tackling complex discrimination in international taxation", *British Tax Review* 5 (2012), p. 612 who considers that these are not situations of most-favourable-treatment since one is not claiming a special benefit that would not otherwise be available for a resident or national of one state (such as a reduced withholding tax rate). Haslehner considers that those are cases of mere "national treatment".
[709] Case KHO 2003/2773 referred in John F. Avery Jones, et al., "Art. 24 (5) of the OECD Model in Relation to Intra-Group Transfers of Assets and Profits and Losses", *World Tax Journal* June, IBFD (2011), pp. 220-221.

during the bargaining in the treaty negotiation. In addition, as I demonstrate when dealing with the next situation, the combined application of two treaties is not something which is not accepted or even recognized under the OECD MTC.

Doubts arise, however, if B and C are resident in two different States (States Z and Y) from the other group members.

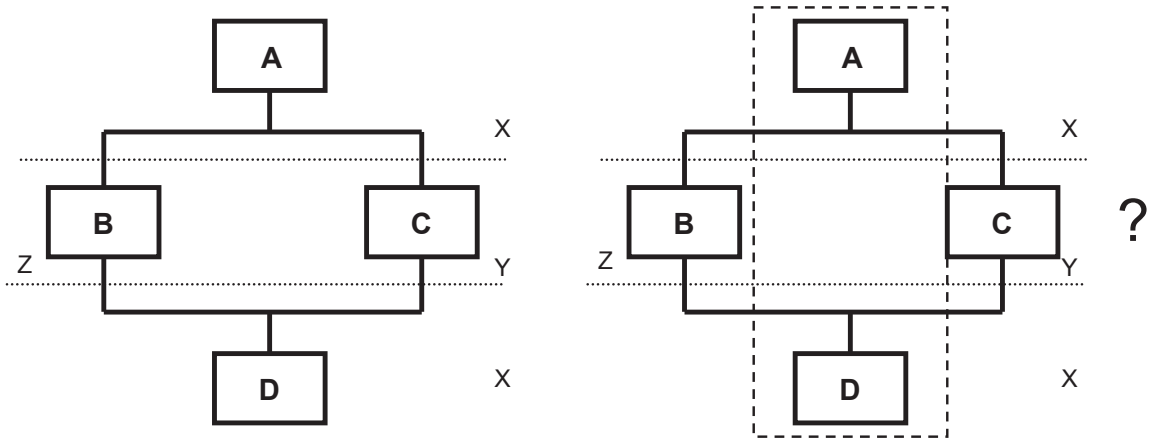

In that case, the application of the tax group benefits between the parent company and the sub-subsidiary requires this latter company to claim the simultaneous infringement of the foreign ownership clause of two different tax treaties (tax treaty X/Z and tax treaty Z/Y). The simultaneous application of two tax treaties is not strange within the OECD MTC. In fact, paragraph 6.5[710] makes an express reference to the simultaneous application of two tax treaties giving rise to a situation of double entitlement to treaty benefits. The case refers to example 9 of the Partnership report,[711] and illustrates a situation of two treaties being applied at the same time.

[710] See para. 6.5 to the Commentary of the OECD MTC to Article 1 which states that:

> "Partnership cases involving three States pose difficult problems with respect to the determination of entitlement to benefits under Conventions. However, many problems may be solved through the application of the principles described in paragraphs 6.2 to 6.4. Where a partner is a resident of one State, the partnership is established in another State and the partner shares in partnership income arising in a third State then the partner may claim the benefits of the Convention between his State of residence and the State of source of the income to the extent that the partnership's income is allocated to him for the purposes of taxation in his State of residence. If, in addition, the partnership is taxed as a resident of the State in which it s established then the partnership may itself claim the benefits of the Convention between the State in which it is established and the State of source. <u>In such a case of "double benefits", the State of source may not impose taxation which is inconsistent with the terms of either applicable Convention; therefore, where different rates are provided for in the two Conventions, the lower will be applied</u>." [underscoreBdS]

[711] See paras. 73 through 75 of the report "*The Application of the OECD Model Tax Convention to Partnerships*" Issues in International Taxation no. 6, Committee on Fiscal Affairs, 1999. Similarly,

Nothing in fact seems to forbid the cumulative application of tax treaties whenever more then one tax treaty is being breached at the same time regarding the same taxpayer, as would be the case under analysis regarding paragraph 5 of Article 24 of the tax treaties involved. Therefore, also in this case, there would be arguments to sustain the extension of group taxation benefits to companies A and D.

A different understanding was reached, however, by the Swedish Supreme Court in a case[712] involving a group with a top parent company located in Germany that had two subsidiaries, one in Switzerland and one in Germany. Each of these subsidiaries had, in turn, a Swedish second-tier subsidiary.[713] The question raised was whether it was possible for one of the second-tier subsidiaries (sub-sub co. 1) to make a group contribution to the other Swedish second-tier subsidiary (sub-sub co. 2).

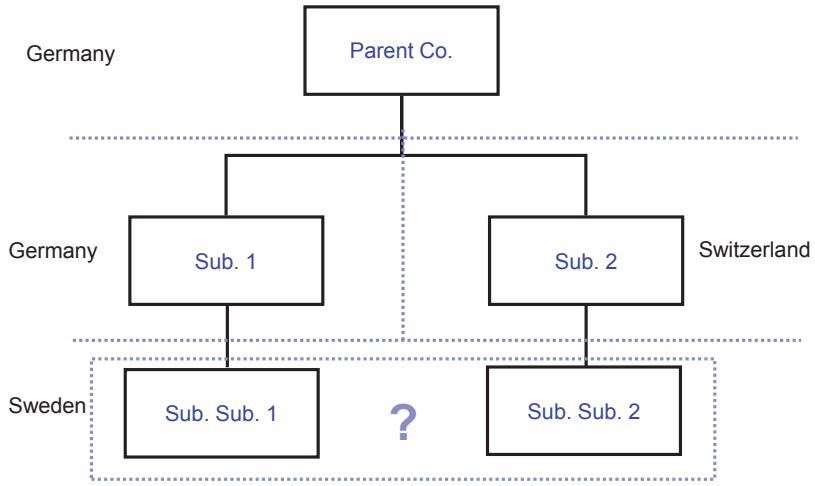

The taxpayer claimed that the impossibility to apply the group contribution regime violated the foreign ownership clause of the applicable treaty. The Swedish Supreme Court rejected the taxpayer's claim. According to the Court, the foreign ownership clause prohibits discriminatory treatment, in the case of denial of the group contribution, if the reason is solely based on the fact that the contributing company is owned by residents of the other Contracting State. However in this case, according to the Court, the denial of the deduction was also based on the fact that the receiving company was owned by a foreign company resident in a third State. Therefore, the issue in this case seems to arise because Court

concerning the simultaneous application of tax treaties, see Joanna Wheeler, *The Missing Keystone of Income Tax Treaties*, IBFD Doctoral Series no. 23 (2012), p. 49.

[712] See case RA 1993 ref 91 II.

[713] For a description of this case see, *inter alia*, Bertil Wiman, IFA Report Sweden "Group Taxation", *Cahiers de droit fiscal international,* 89b (2004), p. 647, Kristina Stahl, "The Application of the Treaty Non-discrimination Principle in Sweden", 28 *Intertax* 5 Kluwer Law International (2000), pp. 198-199.

considered that those requirements were to be met not only by the contributing but also by the receiving companies. Since both the contributing and the recipient companies were owned by foreign companies resident in different States, the application of the group contribution regime would have required the parallel application of the foreign ownership provisions of both the treaties concluded between Sweden/Germany and Sweden/Switzerland. The Court considered that such simultaneous application of the treaties was not possible due to the principle of reciprocity and that tax treaties were limited in effect between the Contracting States.[714] The outcome of this case[715] is different from the previous one. While not expressly referred to by the Court, it does indeed seem that the difference lies in the fact that this case involved the combined application of two non-discrimination clauses of two tax treaties regarding two separate taxpayers. In other words, on the one hand, the combined application of tax treaty non-discrimination clauses of different tax treaties regarding the same taxpayer was accepted[716] but it was rejected, on the other, due to different taxpayers. This reasoning of the Court supports the understanding that there is a limit to the simultaneous application of non-discrimination clauses: its applicability to the same taxpayer.[717] A different view would be to consider that for situations involving different taxpayers as in this case, there is no effective combined application of different tax treaty non-discrimination clauses but rather, a separate test of discriminatory treatment for each taxpayer involved while taking into account the overall treatment of the group. Effectively, paragraph 5 of Article 24 protects a foreign owned company when compared with a company owned by a domestic resident parent company.

---

[714] This is of course debatable, at least since the 2008 amendments to the OECD MTC to Article 4 which now provide in paragraph 8.2 that the effect of the tie-breaker rule under a particular tax treaty will have effect for other treaties since the taxpayer may no longer claim tax treaty benefits in the losing State with other States. See John F. Avery Jones, et al., "Art. 24 (5) of the OECD Model in Relation to Intra-Group Transfers of Assets and Profits and Losses", *World Tax Journal* June, IBFD (2011), p. 221, footnote 172 who also refer to some of the conclusions in the OECD report on "The Application of the OECD Model Tax Convention to Partnerships (1999). For a discussion on the effects of the tie-breaker rule after the 2008 amendments see Kees van Raad "Operation and Effect of Article 4(1) in Dual Residence Issues under the Updated Commentary", *Bulletin for International Taxation* 5/6 IBFD (2009), pp. 187-190.

[715] It is also possible to conceive a situation where both the parent company and the second-tier subsidiaries would be resident in the same State with the two intermediaries being resident in a State that concluded a tax treaty. In that scenario and if the issue of the subjective limits (same v different taxpayer) on the combined application of tax treaty non-discrimination clauses may remain debatable, the argument of the objective limit (reciprocity of tax treaties) becomes less relevant since one would have two taxpayers claiming the foreign ownership clause of the same tax treaty.

[716] For instance, the combined or successive application of the foreign ownership provision of different tax treaties (e.g. in a situation where a taxpayer is held by a multiple chain of companies) finds support in the wording of paragraph 5 itself with the reference to directly or indirectly held or controlled. See in this regard, John F. Avery Jones, et al., "Art. 24 (5) of the OECD Model in Relation to Intra-Group Transfers of Assets and Profits and Losses", *World Tax Journal* June, IBFD (2011), p. 221.

[717] See in this regard, Werner Haslehner in "Tackling complex discrimination in international taxation", *British Tax Review* 5 (2012), p. 613 who concludes that where the relevant companies have different direct owners and only indirectly a common shareholder, the application of the foreign ownership clause to one subsidiary only replaces the non-residence of its own (direct and indirect) shareholders but not the residence of the other subsidiary's direct shareholder who is not a shareholder of both companies.

In this case and that the difference in treatment is also motivated by another factor – the foreign ownership of another group member – does not alter the conclusion that there was a difference in treatment of the subject of the comparison which is forbidden under the applicable tax treaty. This means that assuming that both those companies would suffer a disadvantage, the combined application of the foreign ownership clauses to both taxpayers would still not be required. If both companies are discriminated, the conclusion is that both instances of discrimination should be assessed separately (Sweden/Germany for one taxpayer and Sweden/Switzerland for the other taxpayer) and there is no effective combined application of tax treaty non-discrimination clauses at the level of the contributing company (involving the application of the Swedish treaties with both Germany and Switzerland).[718]

It is interesting to note that a somewhat identical issue was raised in the *Felixstowe Dock* case discussed below. One of the arguments of the HMRC was precisely to look separately at both the surrendering and the receiving companies. It considered that the reason for the difference in treatment in this case was not only because of the inability to surrender losses but also because the claimant companies could not claim them. The issue arose precisely due to the fact that according to the HMRC, the foreign ownership provision could indeed affect the taxation of the UK company which was owned or controlled by foreign shareholders but could bear no effect on the claims of other companies not so owned or controlled. A claimant company in those cases could not make a claim on the basis of the consequential effect of discrimination affecting a surrendering company. The UK Court's reply to this question started by analyzing the nature of the difference in treatment that the non-discrimination articles seeks to prohibit: that the surrendering company is not permitted to surrender its losses in the way an equivalent UK-owned subsidiary could. It considered that for the difference in treatment to be effectively eliminated, the group relief system must operate in a way that the surrendering company's position is not considered in isolation. The difference in treatment can only be effectively remedied by resolving both sides of the group relief equation. Therefore, the UK First Tier Tribunal concluded that[719]:

> "To remedy the difference in treatment of the surrendering company, it therefore follows that, in order for the discrimination against the surrendering company to be eliminated, Article 26 (4) must require that the concomitant group relief must be capable of being made. The effect of Article 26 (4) is that the applicants must be

[718] For critics on the Swedish Supreme Court reasoning, see Niels Bammens, *The Principle of Non-Discrimination in International and European Tax Law*, IBFD Doctoral Series no. 24 (2012), pp. 394-399. Bammens' criticism addresses, inter alia, the conclusion of the court that there was a parallel application of the two tax treaties. He refers that the non-deductibility constituted discrimination only against the contributing company and not the receiving company. Therefore it would require the application of one of the treaties (Sweden/Germany) and in any event only to one single taxpayer. According to Bammens, the place of residence of the shareholder of the transferee (Switzerland) is not relevant for the purposes of claiming the benefit of the group contribution deductibility. Since the transferee is also a Swedish resident company there will be the corresponding compensation at the level of the receiving entity.

[719] See *The Felixstowe Dock and Railway Company Ltd & Ors v Revenue & Customs* [2011] UKFTT 838 (TC), of 19 December 2011.

> enabled to claim group relief in relation to losses surrendered by the surrendering company."

It is clear that in *Felixstowe Dock* there is no issue regarding parallel application of the non-discrimination clauses of different treaties. But the fact is that, within the scope of the group contribution regime, the Court seems to consider that the removal of the discriminatory treatment involves looking at "both sides of the equation" because one should not merely look at the position of one of the companies on its own. This may provide for a (third) possible alternative argument when transposed to situations like the Swedish case. That in the case of group taxation regimes there is an *integrated view*[720] - which is favoured by the author - according to which a group member may claim the protection of any non-discrimination clause. Even those that protect formally other group members but which are materially relevant as they affect the tax position of the whole group.[721]

A similar interpretation to the one performed by the UK Courts in this case had already been made in a case previously referred,[722] analysing the application of paragraph 5 of Article 24 in a situation involving a Swedish parent company making a intra-group contribution to its sub-subsidiary which was held by an intermediate foreign company. Also in this case the Court did not restrict its analysis to the tax position of the company which was claiming the discriminatory treatment – sub-subsidiary which was actually benefiting from the intra-group contribution and therefore, did not suffer any direct disadvantage from the denial of the group contribution – but adopted a broader view of taking into account the consequences for the whole group in ascertaining the discriminatory treatment.

Taking an additional set as a consequence of this integrated view and the reasoning adopted in particular by the UK Courts it means also that if one looks at both sides of the group relief, one is actually taking into account two separate taxpayers so, ultimately, it should be possible to apply different non-discrimination clauses on different taxpayers because of the integrated view to be followed within the context of a tax group.

It is possible to conceive a further variation of this scenario: in the case the intermediate holding companies are located in a State which does not have a tax treaty concluded in the State of the subsidiaries. This was precisely the factual background for the decision in the

---

[720] Favouring the cumulative application of tax treaties even in the case of different taxpayers, see Kees Van Raad, "Non- discrimination under tax treaties regarding groups of companies", in G. Maisto, (ed.), *International and EC Tax Aspects of Groups of Companies*, EC and International Tax Law Series, Vol. 4, IBFD (2008). Van Raad, although not expressly, materially applies, correctly in my view, different tax treaty clauses cumulatively. Also supporting the application of the group contribution regime in Sweden in this scenario and even in situations involving two domestic PEs, see Bertil Wiman, "Swedish tax law and discrimination – some observations", *EC Tax Review* 2 (1997), p. 103-104.

[721] See Werner Haslehner in "Tackling complex discrimination in international taxation", *British Tax Review* 5 (2012), p. 614.

[722] *Regeringsratten, 26 November 1993 ref 91 I.*

Finish case *A Oy and B Oy.*[723] This case[724] involved two Finish subsidiaries with were held by an ultimate US parent company through several intermediate companies, some of which were resident in Bermuda. Finland had entered into a Double Tax Convention with the United States but not with Bermuda. The issue raised involved the possibility of A Oy and B Oy forming a tax group under the group contribution regime.

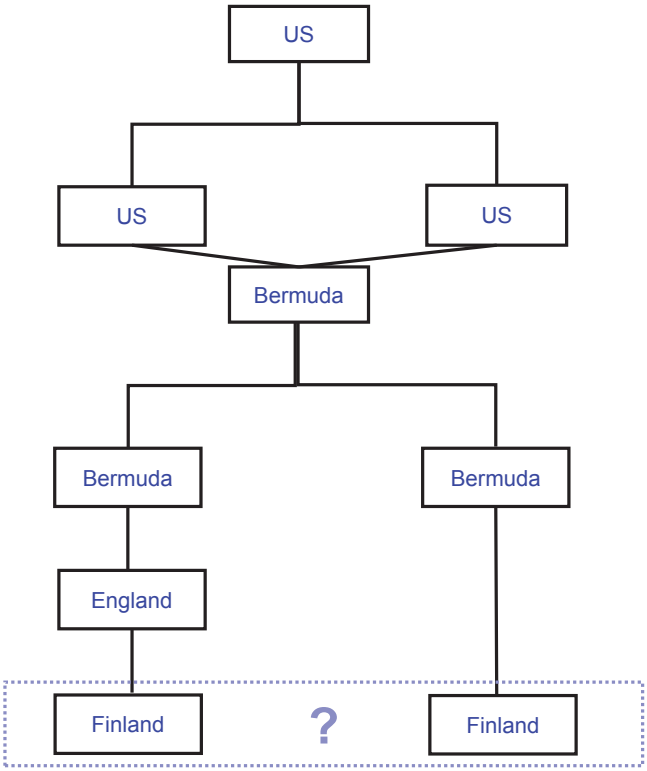

The issue at stake was whether it was possible for the two Finish subsidiaries to benefit from the application of the group contribution regime considering their foreign ownership. In previous decisions, the Supreme Administrative Court of Finland had ruled[725] that the denial of the benefits of the group contribution due to the foreign ownership of the subsidiary violated the foreign ownership non-discrimination clause of the applicable tax

[723] See Supreme Administrative Court case *A Oy and B Oy*, *KHO:2004:65*, of 22 June 2004, 7 *International Tax Law Reports*, pp. 288-323.
[724] See on this case, Seppo Penttilä, IFA Report Finland "Non-discrimination at the crossroads of international taxation", *Cahiers de droit fiscal international* Vol. 93a (2008), p. 264 or Lari Hintsanen and Päivi Viitanen, "Supreme Administrative Court Ruling on the Finland-US Tax Treaty Non-Discrimination Clause, *European Taxation* 10 (2004), IBFD, pp. 460-462.
[725] See Supreme Administrative Court, *KHO:1992:536-537*, of 18 February 1992. For a description of these cases see Edward Andersson, IFA Report Finland "Non-discrimination rules in international taxation", *Cahiers de droit fiscal international* Vol. 78b (1993), p. 410.

treaty concluded between Finland and the State of residence of the shareholder. The particularity in this case was that: (i) there was indirect ownership and (ii) some of the intermediary companies were resident in a jurisdiction - Bermuda - which had not concluded a tax treaty with Finland. The Finish tax authorities (Central Board of Taxation) denied such request due to the non-residence of the other companies of the structure. They further considered that the non-discrimination provision in tax treaties could not apply since there was no treaty between Finland and Bermuda. The identical provision in the tax treaty with the United States was also not applicable because the (direct) group relationship was established by companies which were not resident in the United States.

The Finish Supreme Court reversed this decision and confirmed that the foreign ownership non-discrimination provision of the DTC US/Finland was indeed applicable and therefore, that indirect control was covered by that provision. It further confirmed that the comparison to be made for the purpose of "other similar enterprises" under the foreign ownership provision was exclusively with both a Parent and Finish subsidiaries, the intermediary passive companies resident in another State then being irrelevant.

This decision of the Finish Supreme Court raises some doubts. One of the relevant issues in this case was the interpretation of the expression *indirect control* and, in particular, if the intermediary companies had to be resident either in the State of the parent company (US) or of the ultimate subsidiaries (Finland). It is correct that indirect control can be through companies of third States. In fact, tax treaties do not determine the country in which the intermediate companies in the group ownership relation have to be resident. There is no requirement that they have to be resident in a particular State. The foreign ownership clause explicitly makes reference to *indirect control or ownership*. The purpose of the reference to indirect control or ownership is precisely to ensure equal treatment avoiding discrimination based on the distribution of capital of the companies. A different understanding would, in fact, render the terms "indirectly controlled or owned" useless. In other words, it would be contrary to the non-discrimination clause of the tax treaty if directly owned subsidiaries of a resident of a certain treaty partner could benefit from treaty protection while indirectly owned subsidiaries could not. More clearly: it would be contrary to the non-discrimination clause of the tax treaty if directly owned subsidiaries of a resident of a certain treaty partner could elect to be part of a certain group but indirectly owned subsidiaries could not.

The key issue is how to proceed with the relevant comparator: *other similar enterprises*. The conclusion of the Supreme Court was that there were no reasons not to consider the condition of similarity also met in this case. While the reasoning is quite succinct, the Court considered that a different interpretation would result in discrimination towards Finish subsidiaries. This supports the understanding according to which the comparison indeed remains the same as in the cases of direct ownership irrespective of whether the taxpayer is

owned directly or indirectly.[726] But the decision also appears to totally disregard the intermediary companies. The relevance is merely the existence of a tax treaty concluded with the State of residence of the ultimate parent company.[727] A similar ruling had already been made in case *KVL* 1998/31,[728] which involved a group contribution between two Finish subsidiaries held through a chain of participations of companies resident in other Nordic countries and with an ultimate Netherlands parent company. In this case, all the intermediary companies were resident in tax treaty countries but group contribution was accepted, based merely on the foreign ownership of the tax treaty concluded between Netherlands and Finland.[729]

This interpretation is appealing, but raises questions. The comparison for the purpose of ascertaining if a situation falls under the non-discriminatory treatment requires similarity of relevant facts except the circumstance which gives rise to the discrimination. If one hypothesizes the indirect shareholder as being resident in the same State of the subsidiaries (in Finland) and considers all the relevant circumstances to be the same, it appears that it would not be possible for the subsidiaries to claim group contribution.[730] Since there is discrimination only when the same relevant circumstances – except the protected discriminatory situation – are treated differently, one must indeed disregard the residence of the ultimate shareholder as the treaty is applicable to indirect shareholdings, but it is doubtful whether it is possible to disregard the other factual (relevant) circumstances and the inherent tax consequences, such as the residence of the direct owners of the subsidiaries.[731]

Accordingly, it is arguable that this case should have had a different outcome and that it would not constitute a forbidden discrimination since other similar enterprises would also

---

[726] See Niels Bammens, *The Principle of Non-Discrimination in International and European Tax Law*, Online Books IBFD Doctoral Series no. 24 (2012), p. 398.

[727] Arguments were raised by the taxpayer that nothing in the Commentary suggests that the intermediary holding companies are relevant for the purposes of the comparator.

[728] See Lari Hintsanen and Päivi Viitanen, "Supreme Administrative Court Ruling on the Finland-US Tax Treaty Non-Discrimination Clause, *European Taxation* 10 (2004), IBFD, p. 462.

[729] This could lead to the conclusion that there is no need for a combined application of the foreign ownership clauses of different tax treaties. Irrespective of the existence (or not) of intermediary companies resident in treaty countries, the consolidation of two subsidiaries is possible based on the non-discrimination clause of the treaty concluded between this State and the State of the ultimate parent company.

[730] See Philip Baker's note in case A Oy and B Oy, *KHO:2004:65*, of 22 June 2004, 7 *International Tax Law Reports*, p. 289. This is supported by previous Finish case law (e.g. KHO 1992 B 510) in situations involving a group contribution from a Finish subsidiary to its ultimate parent company also resident in Finland when there was an intermediary company resident in a treaty country ("sandwich situations"). The group contribution was accepted due to the application of the foreign ownership provision of the treaty between Finland and the State of residence of the intermediary company. Therefore, in the absence of a tax treaty the group contribution would not have been possible.

[731] See Luc de Broe, *International Tax Planning and Prevention of Abuse: A Study under Domestic Tax Law, Tax Treaties, and EC Law in Relation to Conduit and Base Companies*, IBFD Doctoral Series Vol. 14 (2008), pp. 559-560.

not be entitled to form a tax group. Further arguments sustain this view as to the improper successful application of the foreign ownership provision in this case. In fact, in a situation where two subsidiaries and their top foreign parent company are resident in the same State but there is an intermediary company resident in a country which has no tax treaty with the country where the subsidiary and parent are resident, in that case it would not be possible for the subsidiaries to claim tax group benefits (or between subsidiaries and the top holding company) to claim discriminatory treatment based on the foreign ownership of Article 24 (5). Therefore, the outcome of this decision was that, by removing a discrimination, a situation such as the one decided by the Finish Supreme Court gives rise to other discrimination: that between ultimate parent and subsidiaries resident in the same State which belong to a chain of intermediary holding companies resident in non-treaty States. As previously described in that case the subsidiaries (in case finish companies) are prevented from claiming the protection under the treaty even if that reverse discrimination itself does not find any obstacle in the OECD MTC.
In addition, the application of the foreign ownership provision of the tax treaty between US/Finland in that scenario would represent that paragraph 5 would be going beyond the protection of Finish companies by reason of US ownership. It would have the effect of requiring equivalent treatment to the ownership at all levels of the chain as long as there was a US ownership at whatever level of the chain,[732] which implies a too broad interpretation of the provision.

Another situation within a group context involving the cumulative application of tax treaty non-discrimination clauses of different tax treaties may occur in the case that both a parent company and subsidiary resident in different States carry on activities in a third State through PEs, being that the participation of the parent company in the subsidiary is effectively connected with the PE of the parent company. The issue is whether it is possible to consolidate the income of both PEs in the State where they are located.

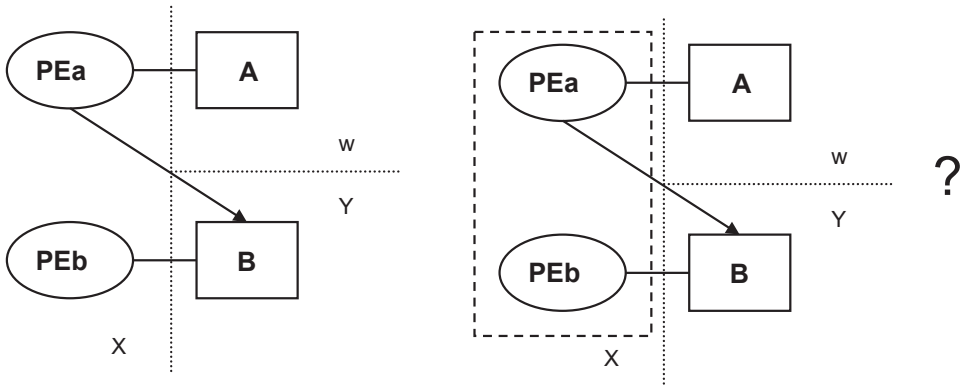

[732] See John F. Avery Jones et al., "Art. 24 (5) of the OECD Model in Relation to Intra-Group Transfers of Assets and Profits and Losses", 3 *World Tax Journal* June (IBFD) 2011, p. 224.

A first step would be to apply Article 24 (3) of the tax treaties concluded between the PE State (State X) and the State where the parent company (State W) and the subsidiary (State Y) are located. This would deem both PEs to be treated as resident companies in State X. However, the parallel application of both tax treaties' non-discrimination clauses could be insufficient to claim the consolidation of the results.[733] Even treating both PEs as companies, the existence of B company could be considered as an intermediary company and require the application of Article 24 (5) of the Tax Treaty concluded between State X and State Y. In this, it should even be possible to consolidate the income of both PEs.[734]

The cumulative application of non-discrimination clauses in different tax treaties can also occur in the situation where a parent company with subsidiary in other State, with both companies holding permanent establishments in a third (same) State. Different to the previously analysed scenario, here the shares of the subsidiary are not held through the PE of the parent company.

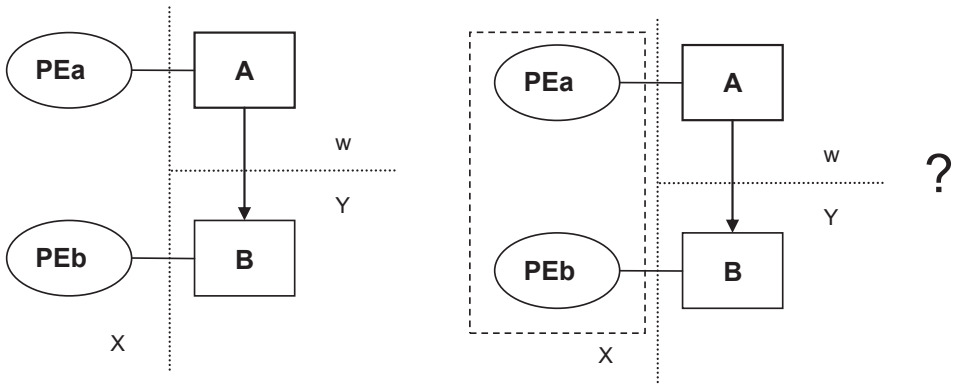

Once again the first step would be to apply Article 24 (3) of the tax treaties concluded between the PEs State (State X) and the State where the respective head offices are located

[733] As mentioned above, the approach is favoured that permits the combined application of non-discrimination clauses of different tax treaties to different taxpayers which would occur in this case.

[734] An issue could arise since it involves the combination of PE non-discrimination clauses of two different tax treaties together with the cumulative application of the foreign ownership non-discrimination clause of one of the treaties, which as stated have arguably different degrees of protection case in which only the lowest degree of protection – less favourable taxation under Art. 24 (3) – would apply. In particular, the question that may arise regarding when one of the PEs is profitable while the other is loss making. While the consolidation of the income for one of them will represent a lower tax base and subsequent less tax levied for the loss making one, it may lead to paying more tax. The possibility to overcome this issue is, as stated above, to consider either that: (i) within a group situation there is an aggregate view of the tax position of its members which, ultimately, represents that the income consolidation of the results of the PEs will lead to paying less tax for the overall group or (ii) make a broad interpretation of para. 3 in order to consider that its scope of protection includes any elements of taxation of a domestic tax system except the ones which, by their nature, cannot apply to PEs due to the differences between a resident and a non-resident (which would not be the case of a tax group regime).

(State W and State Y). This would deem both PEs to be treated as resident companies in State X. However, the parallel application of both tax treaties' non-discrimination clauses could be insufficient to claim the consolidation of the results. Even treating both PEs as companies, the consolidation of the income of the PEs would arguably be challenged due to the existence of intermediary companies (companies A and B) This, in turn, would require the combined application of the foreign ownership provision of Article 24 (5) of the Tax Treaties concluded between State X and State W and Y. In this event, it should be possible to consolidate the income of both PEs similarly to the situation previously referred to.

A final situation to be considered when dealing with the cumulative application of tax treaties involves a foreign parent company in one State (State Y) with two foreign subsidiaries sister companies (resident in State X and State Y) in which one of those subsidiaries carries on activities in the State of one of the subsidiaries (State X) through a PE located therein.

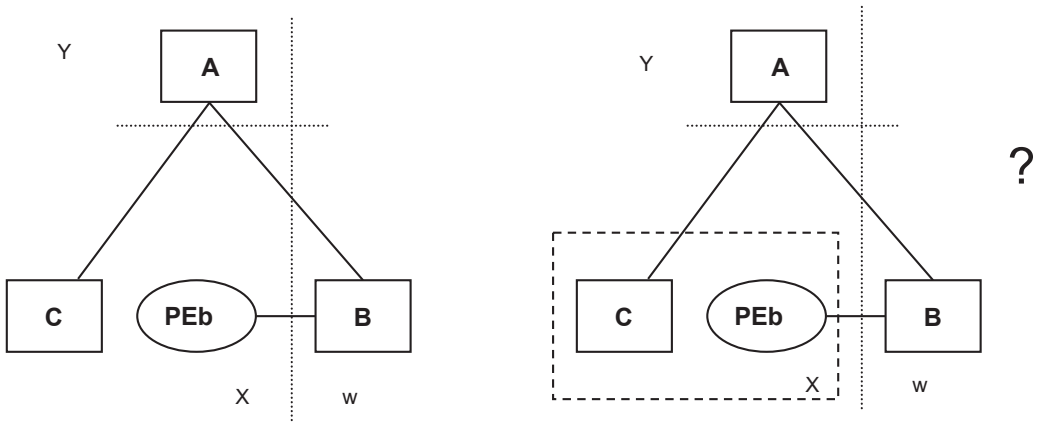

The claim in this case would be to consolidate the income of both the PE and the subsidiary (company C) located in the same State (State X). The first step would be to invoke the application of Article 24 (3) of the Tax Treaty concluded between State X and State W in order to treat the PE located in State X under similar terms as a company resident in that same State. That step by itself would not suffice since it would be arguable that such deemed subsidiary could not consolidate its income with a subsidiary located in State X due to fact that it was owned by companies located in State W (company B) and State Y (company A). Thus, it would be necessary to apply both the foreign ownership provisions of these two treaties as a second step. Assuming that they are modelled on paragraph 5 of Article 24 of the OECD MTC, these clauses would cover both direct ownership (assuming that the deemed subsidiary was held by company B) and indirect ownership (the case of company A).[735]

[735] In this case, the combined application of the different non-discrimination clauses would be claimed by the same taxpayer. In addition and in case the PE would be profitable while the subsidiary would be loss making

10.3 Interim conclusions

This chapter explores the possible interaction of tax treaty non-discrimination provisions and its application in the specific context of group taxation situations.

The existing non-discrimination provisions of tax treaties do not adopt a wide neutrality approach. They only cover particular grounds of discriminatory tax treatment. Therefore, situations of complex discrimination where the difference in treatment arises due to more than one criterion are perfectly conceivable. As demonstrated by some examples in this thesis, there are several situations involving tax groups where complex discriminatory situations may arise. In that event, it has been submitted that multiple tax treaty non-discrimination provisions might apply cumulatively when the discriminatory treatment is due to a multiplicity of factors that requires the combined application of the non-discrimination provisions in order to remedy the disadvantage.

The combined application of non-discrimination clauses may involve clauses of the same treaty. Considering that a State has made a commitment against two types of different discrimination clauses in the same tax treaty, there seems to be nothing to prevent its combined application. If a State signs a tax treaty modelled on OECD Article 24 it is assuming that it will not provide discriminatory treatment to its treaty partner on the specific grounds covered by the various clauses of the non-discrimination article irrespective of their being applied separately or cumulatively. This combined application may, however, be limited by the fact that not all the clauses of Article 24 appear to provide for the same standards of protection. For instance, paragraph 3 addresses *less favourable taxation* whereas paragraph 5 covers *other or more burdensome taxation and connected requirements*. The combined application of these provisions may only occur in the case a taxpayer falls within the scope of both non-discrimination clauses being invoked. This may imply that combining both paragraphs 3 and 5 should lead to the lowest degree of protection.

Similarly, the combined application of non-discrimination clauses may involve combining different non-discrimination clauses of different tax treaties. In this case, it has been argued that when two (or more) different tax treaties have an identical non-discrimination article, it seems possible to claim the combined application of non-discrimination clauses of each of those treaties. Arguably this has a particular impact on group taxation as it allows invoking the foreign ownership provision of different treaties such to allow extending the benefits of

---

there would not be in any event any issue regarding the lowest degree of protection due to the combined application of the non-discrimination provisions. Even if one did not follow an integrated view when dealing within the context of a tax group, it is clear that disallowing the claim for forming a tax and allowing the consolidation of income would clearly lead to the PE paying more tax.

a tax group to resident companies held directly and indirectly by different companies resident in different States all of which having an identical foreign ownership provision.

Chapter 11

Tax Treaties and EU Law

11.1 Introduction

The non-discrimination principle is provided both in tax treaties and the TFEU. A closer analysis shows that there is a mutual influence between both sets of norms. First of all EU tax law has been built on international tax law and therefore is necessarily influenced by the latter. The fact is that a tax provision that derives from a tax treaty or modifies the operation of a domestic tax provision does not insulate that measure from effects under EU law. This is due to the fact that while a bilateral tax treaty may reduce or eliminate the potential for double taxation it also represents an exercise by the State of its taxing jurisdiction.[736] As recurrently recognized by the CJ:[737]

> "56. […] in the absence of unifying or harmonising measures adopted in the Community, in particular under the second indent of Article 220 of the EC Treaty (now the second indent of Article 293 EC),the Member States remain competent to determine the criteria for taxation of income and wealth with a view to eliminating double taxation by means, *inter alia*, of international agreements. In this context, the Member States are at liberty, in the framework of bilateral agreements concluded in order to prevent double taxation, to determine the connecting factors for the purposes of allocating powers of taxation as between themselves (see, to this effect, Case C-336/96 *Gilly* [1998]ECR I-2793, paragraphs 24 and 30).
>
> 57. As far as the exercise of the power of taxation so allocated is concerned, the Member States nevertheless may not disregard Community rules. According to the settled case-law of the Court, although direct taxation is a matter for the Member States, they must nevertheless exercise their taxation powers consistently with Community law (see *ICI*, cited above, paragraph 19, and the case-law cited there)."

Therefore, EU law can interact with tax treaties in different ways impacting tax treaties concluded not only with Member States but also with non-EU Member States. One of those areas is the non-discrimination provision in Article 24. The OECD has recognized this fact

[736] See Malcolm Gammie, "Double Taxation, bilateral treaties and fundamental freedoms of the EC Treaty", in (eds.) Henk van Arendonk, Frank Engelen, Sjaak Jansen, *A Tax Globalist: Essays in Honor of Maarten J. Ellis*, (IBFD online) 2005.

[737] See cases ECJ 12 May 1998, C-336/96 *Gilly v Directeur des Services Fiscaux du Bas-Rhin*, para. 31 or ECJ 23 February 2006, C-513/03 *Heirs of M.E.A. van Hilten – van der Heijden v Inspecteur van de Belastingdienst/Particulieren/Ordernemingen buitenland te Heerlen*, para. 48.

and pointed out four possible ways[738] in which this influence can occur. First, Courts can be tempted to extend the CJ case law interpretation to cases dealt under non-discrimination in tax treaties. Second, Courts may (indirectly) feel compelled to extend the benefits under the TFEU to residents of non-EU Member States based on the non-discrimination clauses in tax treaties. Third, States may want to take into account, when discussing alternatives to tax treaty non-discrimination clauses, the concepts and reasoning developed under the TFEU. Finally, the impact of EU law could restrict Member States from applying the solutions provided in the Commentary to Article 24.

In the following sections, I start by drawing a comparison between the non-discrimination in tax treaties and in EU law. In addition, a reflection is given on how EU law has been influencing the interpretation of non-discrimination clauses in tax treaties considering some relevant case law. Finally, I dwell on some possibilities as to the interaction between tax treaties and EU law, considering both an alternative and a combined application of both sets of norms.

11.2 Comparison between the non-discrimination principle in Tax Treaties and EU Law

It seems undisputable that the non-discrimination requirement under the fundamental freedoms seems to be influencing the interpretation of non-discriminatory obligations in bilateral tax treaties.[739] In addition, the Commission has proposed that a number of articles of the OECD MTC should be aligned with the TFEU.[740] As regards Article 24 the Commission stated that:[741]

> "This article should reflect the fundamental non-discrimination principles of the Treaty.
> This may imply:
> - equating nationality with residence,
> - treating permanent establishments in the same way as resident subsidiaries,

[738] See OECD Public Discussion Draft *Application and Interpretation of Article 24 (Non-Discrimination)*, 3 May 2007, p. 29. See also Luc Hinnekens and Philippe Hinnekens, IFA General Report "Non-discrimination at the Crossroads of International Taxation" *Cahiers de Droit Fiscal International 93b* (2008), pp. 51-52.

[739] Critically, about this possibility, see Klaus Vogel, who advocates three main arguments against applying EU law as regards the interpretation of Article 24: (i) the different function of the two provisions as non-discrimination in EU law is pivotal to the construction of the internal market while Art. 24 is a provision which deviates from the primary purpose of tax treaties regarding the avoidance of double taxation; (ii) the narrower scope of Article 24 which lists the circumstances of forbidden discriminatory treatment while there is far broader scope under the treaty freedoms; (iii) the importance of higher importance of Anglo-American legal principles for the interpretation of Article 24. See Klaus Vogel *On Double Taxation Conventions: a Commentary to the OECD-, UN- and US- Model Conventions for the Avoidance of Double Taxation of Income and Capital with particular reference to German Treaty Practice* (Kluwer 3rd edition 1997), p. 1283.

[740] An example of EU law in the drafting of tax treaty provisions can be found in the DTA concluded between Belgium and the Netherlands which includes in Article 24, a provision on cross-border pensions concerning individuals who are temporarily seconded to the other State, allowing for the deduction of the contributions paid in the working State even if paid to a pension scheme in the other State.

[741] See Commission Staff Working Paper *Company Taxation in the Internal Market*, SEC(2001) 1681, p. 361.

> - requiring provisions available to groups of companies within a Member State to be applicable where one of the members of the group is resident in another EU Member State."

Unsurprisingly, the case law of the CJ in the field of direct taxation was precisely one of the fundamental issues that led the OECD to start a project to re-examine Article 24 of the OECD MTC. Regarding the possible impact of EU law on Article 24 it was stated that:[742]

> "It might be useful to consider some of the concepts and arguments developed under EU Law, e.g. the concept of justification, when discussing the desirability of alternative or additional non-discrimination rules for tax treaties."

Considering this intersection. it is relevant to compare the non-discrimination principle in tax treaties with the one in EU law as interpreted by the CJ highlighting the relevant similarities and differences.

11.2.1 Similarities

There are obvious *similarities* between tax treaty non-discrimination provisions and the TFEU provisions. For instance the scope of protection provided by the freedom of establishment under Article 49 TFEU corresponds somewhat with the PE and the foreign ownership clauses in tax treaties[743] when protecting types of establishment also covered by those clauses (branches and subsidiaries).

There is also no relevant difference[744] in the means of applying the fundamental freedoms and tax treaty non-discrimination. According to EU law, Member States are free to determine the factors by which they define their tax jurisdiction. They may allocate their taxing rights unilaterally or by means of tax treaties,[745] which is a consequence of retaining fiscal sovereignty in direct taxation. It is when they exercise that tax jurisdiction, or how they exercise such tax jurisdiction, which cannot lead to discriminatory treatment protected by the fundamental freedoms. Tax treaties represent the exercise of tax jurisdiction in which States essentially define their taxing rights in accordance with the distributive rules. They define what and to what extent income can be taxed by the State of source and the State of residence. Also here, tax treaty non-discrimination plays a role on how the Contracting

---

[742] See *Application and Interpretation of Article 24 (Non-discrimination) - Public discussion draft*, OECD, 3 May 2007, p. 29.

[743] See Mary C. Bennett, "The David R. Tillinghast Lecture: Nondiscrimination in International Tax Law: A Concept in Search of a Principle", 59 *Tax Law Review*, p. 462.

[744] See Moris M. Lehner, "The Influence of EU Law on Tax Treaties from a German Perspective", *Bulletin* 8/9 IBFD (2000), p. 466.

[745] See Dennis Weber, "In Search of a (New) Equilibrium between Tax Sovereignty and the Freedom of Movement within the EC", 34 *Intertax* 12, p. 586.

States exercise their tax jurisdiction.[746] In other words, also here they cannot exercise their taxation in a discriminatory way which violates the non-discrimination article.

Due to these similarities, there is increasing evidence[747] that national courts within the EU are taking the CJ's approach to the concept of non-discrimination in tax treaties[748] and are applying that approach to questions raised under tax treaty provisions.[749] A good example can be found in the decision of the *Hoge Raad*[750] (Netherlands Supreme Court) in the *Japanese Royalties* case.[751] The case involved a company resident in the Netherlands which had a PE in Switzerland. The activities carried on by the Swiss PE involved the development and exploitation of trademarks and know-how. Part of the profits from those activities were royalties from Japan, being 90% of those royalties attributed to the PE, and the remaining 10% to the head office in the Netherlands. The royalties were subject to 10% withholding tax in Japan in accordance with the DTC Japan-Netherlands.

This is an example of a triangular case[752] as three countries were involved in the taxation of the income: (i) Japan as the source State by means of the 10% withholding tax, (ii)

---

[746] See Alexander Rust, "International Tax Neutrality and Non-Discrimination – A Legal Perspective", in M. Lang et al (eds.) *Tax Treaties: Building Bridges between Law and Economics*, IBFD (2010), p. 632.

[747] In this regard the statement of the Judge President of the first senate of the BFH responsible for international tax law issues:

> "The BFH has already made a first step in the direction of a mutual interrelatedness of non-discrimination clauses. In its Delaware judgement of 29 January 2003, it has (…) connected equal treatment requirements under EC Law with Art. 24 DTC Germany/US and has supported this explicitly by the ECJ's *Uberseering* decision."

(quoted from David Francescucci et al. "Non-Discrimination and Group Consolidation: The Delaware Case of the German Bundesfinanzhof and Beyond" in Raffaele Russo and Renata Fontana (eds.) *A Decade of Case Law - Essays in honour of the 10th anniversary of the Leiden Adv LLM in International Tax Law*, IBFD (2008), p. 143).

[748] As held by Mary C. Bennett, "The David R. Tillinghast Lecture: Nondiscrimination in International Tax Law - A Concept in Search of a Principle", 59 *Tax Law Review*, p. 439:

> "It has become impossible to ignore the impact of that [ECJ] jurisprudence on the analysis of bilateral tax treaty discrimination issues, even though many in the tax treaty world would like to politely pretend that the ECJ has no direct relevance to tax treaty provisions and therefore cannot cause any discomfort."

[749] See Mary C. Bennett and Carol A. Dunahoo, "*The NFCT Tax Treaty Project: Towards a U.S. Tax Treaty Policy for the Future: Issues and Recommendations*", available at http://www.nftc.org/default/Tax%20Policy/05_26_05_NFTC%20_Tax_Treaty_Project_Part_2.pdf (last accessed on 27 June 2012)

[750] *Hoge Raad BNB 2007/230* of 11 May 2007.

[751] See on this case, *inter alia*, Frank P.G. Pötgens, "The Netherlands Supreme Court Again Excludes Credit of Withholding Tax in a Triangular case", *European Taxation* 4, IBFD (2008), pp. 211-212, I.J.J. Burgers, "Triangular Case: Japanse bronbelasting op aan Zwitserse vaste inrichting toe te rekenen royalty's is niet in Nederland verrekenbaar", *BNB* 2002/184, or T. Bender & F.A. Engelen, "Hinken op twee gedachten in een driehoekssituatie", *Weekblad voor Fiscaal Recht* 2002/1461.

[752] See in general, Kees van Raad, "The 1992 OECD Model Treaty: Triangular Cases", *European Taxation* 9, IBFD (1993), pp. 298-301, John Avery Jones, "The David R. Tillinghast Lecture: Are Tax Treaties Necessary?", 53 *Tax Law Review* (1999-2000), pp. 27-30 or John Avery Jones & Catherine Bobett,

Switzerland as the PE State regarding the profits attributable to that PE, and (iii) the Netherlands as the State of residence of the company. This triple taxation leads to the question of which countries should provide for and how should they provide for the double taxation relief. The possibilities were: (i) in Switzerland, a relief pursuant the non-discrimination PE clause under the tax treaty between Netherlands-Switzerland concerning the 10% tax withheld in Japan, and (ii) in the Netherlands, whether a double relief - exemption for the profits of the Swiss PEunder the tax treaty between Netherlands-Switzerland and credit regarding the tax withheld in Japan under the tax treaty between Netherlands-Japan - or just a single one should be granted. In this case, the question to be decided by the *Hoge Raad* was precisely whether the Netherlands had to grant a dual relief. The Netherlands tax authorities had conceded to grant an exemption for the PE´s profits, as well as a credit for the tax withheld in Japan, but limited to the 10% of this income that was attributed to the head office, but had rejected the credit for the 90% royalties attributed to the PE.

The Supreme Court of the Netherlands confirmed this reasoning and rejected the dual relief for the withholding tax concerning the royalty payments to the Swiss PE. Among the different arguments used, the *Hoge Raad* ruled that it would be up to Switzerland to grant the credit for that withholding tax because that was the State where the PE is located. The Court relied, therefore, on the principle of non-discrimination on the treatment of PEs by making reference to the CJ judgment in *Saint-Gobain.*[753] In this judgment, the CJ considered[754] that, within the scope of a tax treaty, the principle of national treatment would require the Member State which is party to the treaty to grant to PEs of non-resident companies the advantages provided by that treaty on the same conditions as those which apply to resident companies. This reference is remarkable considering that the *Saint-Gobain* judgment was not applicable in this case as it dealt with a breach of the freedom of establishment which is not applicable to situations involving third countries. It is further remarkable that the *Hoge Raad* made no reference to the PE non-discrimination clause. As regards the credit for foreign tax, one of the conclusions of the OECD report on triangular cases[755] was that a literal interpretation of Article 24 (3) of the OECD MTC would require the State where the PE is located to grant a credit in the same way as it would to residents

---

"Triangular Treaty Problems: A Summary of the Discussion in Seminar E at the IFA Congress in London, 53 *Bulletin for International Fiscal Documentation* 1 IBFD (1999), pp. 16-20.

[753] ECJ 21 September 1999, C-307/97 *Compagnie de Saint-Gobain v FinanzamtAachen-Innenstadt*.

[754] ECJ 21 September 1999, C-307/97 *Compagnie de Saint-Gobain v FinanzamtAachen-Innenstadt*, para. 58 which reads:

> "In the case of a double-taxation treaty concluded between a Member State and a non-member country, the national treatment principle requires the Member State which is party to the treaty to grant to permanent establishments of non-resident companies the advantages provided for by that treaty on the same conditions as those which apply to resident companies."

[755] OECD *Model Tax Convention: Four Related Studies ("Triangular Cases")*, Issues in International Taxation no. 4, (OECD Paris: 1992).

receiving dividends, interest or royalties from the State of source[756]. These conclusions were reflected in the Commentary.[757] It is unclear why the *Hoge Raad* made reference to the *Saint-Gobain* case and did not refer to the PE non-discrimination clause. Most likely because the solutions provided in the Commentary are not entirely clear[758] and also because Switzerland did not agree with the interpretation that the PE non-discrimination clause leads to an extension of the application of tax treaties with third countries.[759]

Also this influence of EU law on tax treaty interpretation of the non-discrimination clauses is present within the scope of group taxation. In fact, in the *Delaware* case,[760] the German Supreme Court relied on EU law arguments for the interpretation of tax treaty non-discrimination. As referred to above, the case[761] involved a German resident subsidiary ("the taxpayer") which was owned by a company incorporated under the laws of Delaware, therefore, having its legal seat and residence in the US. The US company later moved its place of management to Germany. Subsequently, the taxpayer and its US parent company entered into an *Örganschaft* (tax group) agreement. This agreement was rejected by the German tax authorities based on the fact that, under the *Örganschaft* rules, in order for a company to be part of a group it also had to have its statutory seat in Germany. In this case, it was undisputable that the statutory seat was in the US and not in Germany.

The taxpayer appealed this decision arguing that this requirement was in breach[762] of the foreign ownership provision corresponding to Article 24 (4) of the tax treaty between Germany and the US (which is identical to paragraph 5 of Article 24 of the OECD MTC). The BFH confirmed the taxpayer's claim. In particular, it considered that the seat theory requirement could not be upheld taking into account the CJ's judgment in the *Überseering*

---

[756] See paragraph 19 of the OECD *Model Tax Convention: Four Related Studies ("Triangular Cases")*, Issues in International Taxation no. 4, (OECD Paris: 1992).

[757] See paragraphs 69 and 70 of the OECD Commentary to Article 24.

[758] See I.J.J. Burgers, "Triangular Case: Japanse bronbelasting op aan Zwitserse vaste inrichting toe te rekenen royalty's is niet in Nederland verrekenbaar", *BNB* 2002/184.

[759] See Issues in International Taxation no. 4, Model Tax Convention: Four Related Studies, OECD 1992 and T.Bender and F.A. Engelen, "Hinken op twee gedachten in een driehoekssituatie", *Weekblad voor Fiscaal Recht* 2002/1461.

[760] See Bundesfinanzhof, Case I R 6/99, 29 January 2003, 6 *International Tax Law Reports*, pp. 318-335.

[761] See for an analysis of this case, Klaus Sieker "German Tax Review: Court Ruling Increases Appeal of U.S. Dual Resident Corporations", *Tax Notes International,* 16 June 2003, pp. 1107-1109, Jõrg-Dietrich Kramer, "Tax Consolidation Between a U.S. Corporation and its German Subsidiary", *Tax Planning International Review* (2003), pp. 6-8 or David Francescucci et al. "Non-Discrimination and Group Consolidation: The Delaware Case of the German Bundesfinanzhof and Beyond" in Raffaele Russo and Renata Fontana (eds.) *A Decade of Case Law - Essays in honour of the 10th anniversary of the Leiden Adv LLM in International Tax Law*, IBFD (2008), pp. 126-164.

[762] This requirement of the German law according to which a company set up in accordance with the law of another State which has its registered office outside Germany although having a place of effective management in Germany could not benefit from the *Örganschaft* regime which is available to German companies was considered by the European Commission as a discrimination against EU Law, namely the freedom of establishment and referred to the CJ. See the European Commission IP/12/283, of 22 March 2012.

case.[763] The *Überseering* case concerned a company established under Netherlands law that had moved its place of management to Germany. The question was whether the transfer from the Netherlands to Germany would affect the recognition of the legal capacity of such company in Germany. The CJ concluded[764] that the seat theory requirement in the case of an inward migrating company amounted to a violation of the freedom of establishment. Although the BFH recognized that this decision was only directly relevant and binding within the EU context, it considered that the foreign ownership non-discrimination clause under the tax treaty between US/Germany provided a similar protection.

The apparent simplicity of the reasoning adopted, nevertheless, gives rise to questions. First of all, not immediately understandable is the link between *Überseering* and the foreign ownership non-discrimination clause used by the BFH. The reference to *Überseering* implies a direct discrimination of the parent company, which wishes recognition of its legal capacity. Under the foreign ownership clause the entity that is being discriminated and which can claim protection is the subsidiary - due to its foreign ownership – not its shareholder. In other words, the *Überseering* judgment had no relevance for the purposes of the foreign ownership provision.[765] The most obvious explanation seems to be that the reference to the CJ rule was a necessary preliminary step for this case,[766] as it obliged Germany to recognize the legal existence of the foreign incorporated entity as well to allow the BFH a justification for following a contradicting view to a formed decision.[767]

11.2.2 Differences

A first difference between non-discrimination in tax treaties and EU law is that Article 24 provides for an absolute prohibition.[768] A distinction according to one of the forbidden

---

[763] ECJ 5 November 2002, C-208/00 *Überseering BV v Nordic Construction Company Baumanagement GmbH (NCC)*.

[764] ECJ 5 November 2002, C-208/00 *Überseering BV v Nordic Construction Company Baumanagement GmbH (NCC)*, para 82.

[765] Alexander Rust "Ermöglischen Diskriminierungsverböte eine Organshaft über die Grenze", *IStR* 19 (2003), p. 559.

[766] See Jõrg-Dietrich Kramer, "Tax Consolidation Between a U.S. Corporation and its German Subsidiary", *Tax Planning International Review* (2003), p. 8 and David Fracescucci et al. "Non-Discrimination and Group Consolidation: The Delaware Case of the German Bundesfinanzhof and Beyond" in Raffaele Russo and Renata Fontana (eds.) *A Decade of Case Law - Essays in honour of the 10th anniversary of the Leiden Adv LLM in International Tax Law*, IBFD (2008), p. 143.

[767] In that regard, see Bundesfinanzhof, Case I B 72/91, 13 November 1991.

[768] See, *inter alia*, Alexander Rust, in Vogel/Lehrer *Doppelbesteuerungsabkommen*, 5 (2008), paragraph 4, Philip Baker, *Double Taxation Conventions*, Sweet & Maxwell (3rd edition), p. 24-2/17, John F. Avery Jones, et al., "The Non-Discrimination Article in Tax Treaties-II", *British Tax Review* (1991), p. 450 or Kees van Raad, "International Tax Neutrality under the OECD Model Convention and the EC Treaty rules – structural and conceptual issues", ITC Leiden materials on non-discrimination (unpublished). Differently, the non-discrimination principle under the fundamental freedoms is a relative prohibition due to the existence of justifications.

criteria leads to a violation of the non-discrimination provisions.[769] This means that as long as a situation falls within the scope of one of the non-discrimination clauses that will represent, as such, a discriminatory treatment in breach of a particular tax treaty without any possible justification.[770] The Commentary acknowledges this when referring that the non-discrimination provisions of Article 24 seek *to prevent unjustified discrimination*[771]. However, this has not hampered domestic courts[772] or tax authorities to make, at their discretion, an interpretation *ad hoc* giving justifications to some particular tax measures in order not to consider a certain situation discriminatory under tax treaties[773]. Whether this is may be an influence of EU Law, the fact is that, in the absence in the wording of the non-discrimination rule of a possibility to justify a discrimination – like it is expressly stated in paragraph 4 which excludes adjustments based on the arm's length principle, - this approach goes beyond the boundaries of the article which does not permit justifications[774]. In contrast, the CJ accepts that discrimination national tax rules can be justified under the rule of reason by overriding reasons of public interest (other than those specifically provided in the TFEU and which are of limited use in the field of direct taxation) allowing some leeway for Member States to defend their cross-border discriminatory rules.

---

[769] See Kees Van Raad, "The Impact of the EC Treaty's Fundamental Freedoms Provisions on EU Member States' Taxation in Border-crossing Situations – Current State of Affairs", *EC Tax Review* 4 (1995), p. 192. See in particular John F. Avery Jones, et al., "The Non-Discrimination Article in Tax Treaties-II", *British Tax Review* (1991), p. 452 stating that that the OECD Model list of circumstances of forbidden discrimination leaves no room for recognising (good) grounds of justification.

[770] This difference between tax treaty non-discrimination clauses and the non-discrimination under EU Law can be explained conceptually. If a rule forbids discrimination in general it is ultimately up to the Courts to determine which grounds of differential treatment are acceptable. On the contrary, if a rule forbids discrimination on specific grounds without simultaneously stipulating exceptions for particular cases where differential treatment is accepted, then as long as the facts of the case meet the requirements of the non-discrimination rule, such rule applies and the differential treatment is forbidden. See Kees van Raad, "Revisiting a 1981 perspective on EC non-discrimination rules in income tax matters", *British Tax Review* 3 (2006), pp. 319-320.

[771] See paragraph 1 of the Commentary to Article 24 of the OECD MTC.

[772] See the decision in the Indian Income Tax Appellate Tribunal in case *Automate Securities Clearance Inc v Income Tax Officer*, ITA No 1758/PN/2004, *International Tax Law Reports* 11, pp. 201-235 in which the Court observed in paragraph 42 regarding the application of PE tax treaty non-discrimination clause that:

> "There could indeed be different tax treatments to the PE of the other Contracting State and the enterprise of the source state, but as long as such tax differentiation could be justified on the grounds of dissimilarities in their situation, the prohibition against discrimination cannot be invoked."

Similarly, also the decision of the Income Tax Appellate Tribunal in case *Mashreq Bank Psc v Dy. Director of Income Tax* on 13 April 2007, para. 15.

[773] See Paul Farmer "A difference of form or substance? A comparison of the discrimination analysis in EU law and in recent UK cases on tax treaties" in D. Weber (ed.) *EU Income Tax Law: Issues for the Years Ahead*, EC and International Tax Law Series Vol. 9 IBFD (2013), p. 354, who states that UK courts when searching for the cause of the different treatment within the scope of application of treaty non-discrimination are also effectively engaging in an inquiry into the justification for the different treatment.

[774] See Kees Van Raad, "International Tax Neutrality under the OECD Model Convention and the EC Treaty rules – structural and conceptual issues", ITC Leiden materials on non-discrimination (unpublished).

The reason as to the inexistence of justification in tax treaty matters is apparent: the purpose of tax treaty non-discrimination is far less ambitious than the one played by the fundamental freedoms in the TFEU and therefore does not require extending the interpretation of non-discrimination as performed by the CJ. In addition, the non-discrimination clauses in tax treaties are applied by domestic courts and there is no supra-national body as the CJ to provide and interpret possible unwritten justifications in a (tentatively) consistent and harmonized matter. Admitting justifications within a tax treaty context would add inconsistency and lack of clarity in application of these rules.

Another difference[775] regarding the TFEU provisions is that all Article 24 clauses target discrimination against some form of inbound activity by foreign persons. Accordingly, the nationality and the permanent establishment clauses refer to the direct involvement by foreign persons in the host country and the deductibility and the foreign ownership clauses related to indirect participation. The tax treaty no discrimination Article is a source-country obligation under which a certain country will not tax nationals (or residents) of its treaty partner more heavily than its own nationals (or residents).[776] It, therefore, does not address outbound activities of domestic persons which, on the contrary, are protected by the fundamental freedoms.[777] This is due to the fact that in tax treaties the main obligation of a residence country is to grant relief of double taxation (by exemption or a foreign tax credit pursuant to Articles 23 A and B of the OECD MTC) to its residents. There is no non-discrimination obligation against foreign investment or foreign income. In other words, if a country of residence wants to discriminate against investment or income earned in a particular source country, there is no provision in a tax treaty that prevents it for doing so.[778]

One of the most relevant differences between EU law and tax treaties concerns the geographical scope of application. It should be recalled that under the applicable TFEU provisions, the freedom of establishment (Article 49 TFEU) is limited to intra-Community situations whereas the free movement of capital (Article 63 TFEU) also applies to relationships involving third countries (that is, non-EU Member States) according to certain conditions. This issue, of course, leads to the discussion on the relationship between these two freedoms.[779] . The CJ has declared that in case the national legislation at stake is intended to be applied only to those shareholdings which enable the holder to exert a

[775] See Mary C. Bennett, "The David Tillinghast Lecture: Nondiscrimination in International Tax Law: a concept in search of a principle", 59 *Tax Law Review* 4, New York (2006), pp. 462-463.
[776] See American Law Institute, Federal Income Tax Project, International Aspects of United States Income Taxation II, Proposals on United States Income Tax Treaties (1992), p. 253.
[777] Therefore, situations as in the *Marks & Spencer, Lidl Belgium* or *X Holding* cases do not fall within the scope of Article 24 as they concerned outbound situations.
[778] See, Brian J. Arnold, "Tax Discrimination Against Aliens, Non-Residents, and Foreign Activities: Canada, Australia, New Zealand, the United Kingdom and the US", *Canadian Tax Paper no. 90*, Canadian Tax Foundation, Toronto (1991), p. 27.
[779] See, for a more extensive analysis on this issue 13.5 *infra*.

definite influence on a company's decisions and to determine its activities the situation falls only within the scope of Article 49 TFEU on the freedom of establishment[780]. As described previously, group taxation regimes are, by definition, rules targeted only at relations within a group of companies. In that regard they require the parent company to have control or definite influence on the company's decisions because that is the essence of treating a group of companies as a single economic unit. The CJ has already clarified that the legislation that concerns only to groups of companies falls within the freedom of establishment rather than the free movement of capital.[781] Following its settled case law, the group taxation rules are thus considered exclusively in light of the freedom of establishment. That implies that group taxation situations involving companies resident in third countries do not fall within the TFEU protection and are limited to the scope of the non-discrimination provision in tax treaties.

Another inherent difference between non-discrimination provisions of the OECD MTC and the TFEU is the judicial review. As analysed before, in this latter case, the interpretation of the provisions is made by the CJ which, to a certain extent, ensures a consistent and uniform interpretation. Differently, the tax treaty provisions are construed by different national courts which have obvious differences in the interpretation of the non-discrimination provisions.

A fundamental difference lies in the fact that, when compared with EU Law, the clauses of Article 24 have a considerably narrower scope than the concept of non-discrimination applied within the TFEU provisions. That is due, as said, to the role of the CJ with its broad interpretation of that principle regarding the fundamental freedoms. In this regard, the CJ follows an extensive interpretation of the TFEU's prohibition on discrimination on the basis of nationality to include *covert* (or hidden) forms of *discriminatio*n. Since nationality is not a relevant criterion for taxation used by Member States, the Court goes beyond mere discrimination based on nationality to include other forms based, in particular, on place of origin or residence. Therefore, in certain cases, a rule affecting non-residents may be presumed to affect primarily foreign nationals and might be considered discriminatory unless justified by objective factors and in accordance with the proportionality test. In comparison, tax treaties follow a narrower interpretation, limited to the prohibited situations provided in the different paragraphs of Article 24 of the OECD MTC. The current version

[780] See cases ECJ 12 December 2006, C-446/04 *Test Claimants in the FII Group Litigation v. Commissioners of Inland Revenue*, para. 37; CJ 21 October 2010, C-81/09 *Idryma Typou AE v Ypourgos Typou kai Meson Mazikis Enimerosis*, para. 47; CJ 15 September 2011, C-310/09 *Ministre du Budget, des Comptes publics et de la Fonction publique v Accor SA*, para. 32; CJ 13 November 2012, C-35/11 *Test Claimants in the FII Group Litigation v Commissioners of Inland Revenue and The Commissioners for Her Majesty's Revenue & Customs*, para. 91; CJ 28 February 2013, C-168/11 *Manfred Becker, Christa Becker v Finanzamt Heilbronn*, para. 25; and CJ 11 September 2014, C-47/12 *Kronos International Inc. v Finanzamt Leverkusen*, para. 31.

[781] See, *inter alia*, ECJ 12 December 2006, C-446/04 *Test Claimants in the FII Group Litigation v. Commissioners of Inland Revenue*, para. 118; ECJ 13 March 2007, C-524/04 *Test Claimants in the Thin Cap Group Litigation v Commissioners of Inland Revenue*, para. 33; and ECJ 18 July 2007, C-231/05 Oy AA, para. 20.

of the OECD MTC Commentary following the 2008 amendments[782] included a new introductory section[783] with the purpose of clarifying some principles of the concept of non-discrimination in the OECD MTC:

> "For that reason, the Article should not be unduly extended to cover so-called "indirect" discrimination. For example, whilst paragraph 1, which deals with discrimination on the basis of nationality, would prevent a different treatment that is really a disguised form of discrimination based on nationality such as a different treatment of individuals based on whether they hold, or are entitled to, a passport issued by the State, it could not be argued that non-residents of a given State include primarily persons who are o nationals of that State to conclude that a different treatment based on residence is indirectly a discrimination based on nationality for purposes of that paragraph." [underscore BdS]

Therefore, the Commentary states that the clauses of Article 24 aim at the elimination of tax discrimination in precise circumstances and that it should not be broadened to cover "indirect" (or in the CJ words "covert") discrimination.[784] The more limited non-discrimination obligations of tax treaties are somehow obvious due to the clear-cut distinction between residents and non-residents in which they are structured. Still, it is possible to find once again influences of EU Law when interpreting non-discrimination in tax treaties. One of the most interesting cases is the decision of the *Bundesfinanzhof* in case I R 6/09,[785] involving the application of thin capitalization rules and their compatibility with the non-discrimination provision in tax treaties. The facts involved a Swiss company that was the sole shareholder of a company incorporated also in Switzerland but effectively managed in Germany (reason by which it was subject to unlimited tax liability therein and therefore treated as a German resident taxpayer). The parent company granted loans to its subsidiary. The German tax authorities denied the interest deduction based on the applicable thin capitalization rules in force at the time. According to such rules, repayments in respect of a loan capital that a company with unlimited tax liability had received from a shareholder who had a substantial holding in its capital were regarded as covert distribution of profits where: (i) the loan capital exceeded the applicable debt to equity ratio, and (ii) the shareholder was not entitled to an indirect tax credit (pursuant to the then applicable imputation system aimed at preventing economic double taxation) regarding the taxed profits of the subsidiary. The taxpayer challenged this assessment based on the breach of Article 25 (3) of the DTC entered into between Germany and Switzerland of 1971, which corresponds to the foreign ownership provision under the current paragraph 5 of Article 24

[782] See on this Silke Burns "Taxation and Non-Discrimination: Clarification and Reconsideration by the OECD", *European Taxation* 9, IBFD 2008, pp. 484-492.
[783] See paras. 1 through 4 of the Commentary on Article 24 of the OECD MTC.
[784] See, *inter alia*, Claus Staringer, "Tax Treaty Non-Discrimination and EC Freedoms", in Michael Lang et al. (eds.) *Tax Treaty Law and EC Law*, Series on International Taxation, Vol. 30, Kluwer Law International, p. 232. Dissenting, see G. Toifl who considers that all arguments brought forward in favour of covert discrimination being protected under EU Law are valid for tax treaty law purposes in general and with respect to article 24 (1) in particular. See G. Toifl, IFA Report Austria "Non-discrimination at the crossroads of international taxation", *Cahiers de droit fiscal international* Vol. 93a (2008), p. 123.
[785] See Bundesfinanzhof, Case I R 6/09, 8 September 2010, 13 *International Tax Law Reports*, pp. 646-668.

of the OECD MTC.[786] The BFH considered that indeed, this legislation did not comply with the foreign ownership non-discrimination of the applicable tax treaty.
The influence of EU law in the interpretation of the non-discrimination in tax treaties is quite apparent in the BFH analysis. As referred to, under the German law the criteria for distinction regarding the application of the thin capitalization provisions was not directly based on the shareholders place of residence but rather on the entitlement to corporate tax credit. This means that, in particular, in cases such as tax exempt entities even German entities would not be entitled to a tax credit and, consequently, would be subject to interest deduction limitations. However, the BHF applied in its analysis a "covert discrimination test". It considered that it was irrelevant in this regard that the distinguishing criteria was not directly applicable to the shareholder's place of residence. It considered that a reference should be made to EU law which is parallel as far as the criteria for comparison is concerned as apparent from the CJ's judgment in case *Lankhorst-Hohorst,*[787] which dealt with the identical German legislation. The BFH considered irrelevant that the legislation at stake could also be applicable to resident shareholders (certain tax exempt entities for instance). It focused instead on the purpose of the legislation which, according to this Court, was primarily and effectively targeted to cover cross-border instances of thin capitalization with foreign shareholders.

Another example can be found in the decision of the Cour Administrative d' Appel de Paris in case *Fondation Stichting Unilever Pensioenfonds.*[788] Concretely, a Netherlands pension fund sold the shares in a French real estate company ("Orion") and was subject to taxation in France for the respective capital gains. However, in case of a French pension fund the same transaction would have benefited from a tax exemption. The taxpayer claimed that the difference in the treatment between a French pension fund and a Netherlands pension fund envisaging the same transaction amounted to a breach of the nationality provision under paragraph 1 of Article 25 of the Double Tax Treaty concluded between France and the Netherlands[789] as well as the free movement of capital under Article 63 TFEU. The Paris Appeal Court considered that the difference stated in Article 244, bis A of the French General Tax Code was based on the location of the entity's seat which, in fact, determined its nationality. For the purpose of determining that both a French and a Netherlands pension fund were in the same circumstances, the Court looked at the object of both entities and

[786] It should be stressed that the DTC Germany/Switzerland did not have a similar provision corresponding to the current paragraph 4 of Article 24 of the OECD MTC which, as stated, was only included in the 1977 version of the Model.
[787] ECJ 21 December 2002, C-324/00 *Lankhorst-Hohorst GmbH v Finanzamt Steinfurt*.
[788] See *Cour Administrative d' Appel de Paris*, Case no. 06PA03370 of 6 December 2007, available at: http://www.legifrance.gouv.fr/affichJuriAdmin.do?oldAction=rechExpJuriAdmin&idTexte=CETATEXT000017990965&fastReqId=2087548342&fastPos=4 (accessed on 26 March 2015). For a description of the case, see Niels Bammens, "The Interaction between the Interpretation of Article 24 OECD MTC and the Non-discrimination Standard developed by the CJEU", *EC Tax Review* 4 Kluwer Law International BV (2013), pp. 176-177 or Luc De Broe and Robert Neyt, "Tax Treatment of Cross-Border Pensions under the OECD Model and EU Law", *Bulletin for International Taxation* 3 IBFD (2009), p. 90.
[789] Double Tax Treaty concluded between France and the Netherlands of 16 March 1973.

concluded that considering the type of activities performed, there was no relevant difference between them. This approach actually recalls the approach of the CJ when dealing with those types of entities which examines the comparability of status based on the nature of the activities performed by those entities.[790] This is further enhanced by the fact that the Paris Appeal Court implicitly acknowledged that the same standard of comparability is used for the purpose of tax treaties and EU law when it accepted that due to identical reasons, the situation at stake also constituted a breach of the free movement of capital. The influence of EU Law in the tax treaty interpretation is even more apparent if one considers that the corporate seat under French law is a criterion which, for tax law purposes, is relevant to determine residence. While this is unclear from the case, it appears that the Court of Appeal has broadened the scope of the nationality provision[791] to cover situations not only of direct discrimination based on nationality but also of indirect discrimination by reason of its location in another Member State.[792]

This EU law influence can be contrasted with the US approach concerning its the earnings stripping rule provided in a provision of the Internal Revenue Code (IRC). Under IRC §163(j), taxpayers with an excessive debt–equity ratio (greater than 1.5 to 1) and too much interest expense (as determined under a statutory formula) will not be able to deduct some or all of their related party interest in the current year if the related party pays no (or treaty-reduced) tax on the interest income.[793] According to the US Congress, this rule is not tax treaty discriminatory as it applies also in case of non-foreign exempt organizations.[794] But the fact is that it presents many similarities with the German regulations that were scrutinized by the BFH: although IRC §163(j) is written to be applicable to both US and foreign parents of a US subsidiary, it targets essentially situations involving a foreign parent with a US subsidiary.[795] This example illustrates the different approaches between a broader and narrower view of tax treaty non-discrimination. One can wonder if it is in any

[790] ECJ 14 September 2006, C-386/04 *Centro di Musicologia Walter Stauffer v Finanzamt München für Körperschaften*, paras. 38-39.

[791] It should be taken into account that this Double Tax Treaty dates from 1973 and therefore, its wording implies that nationals of one State should not be subject to discriminatory treatment when compared to nationals of the other State *"in the same circumstances*". Only with the 1992 amendments to the OECD MTC was the expression "*in particular with respect to residence*" added as a typical relevant factor to be considered when assessing whether two nationals are in the same circumstances. While it is true that in the 2008 amendments to the OECD MTC, the Commentary stated that this expression did not appear in the 1963 and 1977 models but nevertheless, the OECD countries did take the residence of the taxpayer into account, one can wonder whether the Paris Court actually performed a literal interpretation of the wording provided in paragraph 1 of Article 25 of this Double Tax Treaty.

[792] See Luc De Broe and Robert Neyt, "Tax Treatment of Cross-Border Pensions under the OECD Model and EU Law", *Bulletin for International Taxation* 3 IBFD (2009), p. 90.

[793] See Diane Ring, IFA US Report "The Debt to Equity Conundrum", *Cahiers du Droit Fiscal International* Vol. 97b, (2012), pp. 774 and 784-785.

[794] See H. David Rosenbloom, "Towards a New Tax Treaty Policy for a New Decade", 9 *American Journal of Tax Policy* (1991), pp. 90-91.

[795] See American Law Institute, *Federal Income Tax Project: United States Income Tax Treaties* (1992), p. 284.

case correct to perform a comparison of foreign taxpayers with domestic tax-exempt entities.[796] The OECD Commentary states[797] that the non-discrimination principle cannot be construed as obliging a State to extend certain tax privileges that it grants to its domestic public bodies to foreign bodies because they are not comparable. It seems also not appropriate to compare a domestic tax-exempt entity with a foreign (gainful undertaking) taxpayer for the purposes of determining whether certain interest deduction limitation regulations are discriminatory. A domestic tax-exempt entity is freed from tax due to internal policy reasons.[798] A foreign business entity is fully taxable and therefore, should be compared with fully taxable domestic entities.

This line of reasoning raises the question of whether the interpretation of tax treaty non-discrimination provisions should indeed – and in somewhat similar terms to the CJ case law - involve looking behind the label[799] to determine the practical effect of a possible discriminatory provision rather than following a mere literal interpretation of the wording of those provisions. One may wonder if a purposive interpretation of the non-discrimination article does not indeed require that the domestic rules which in their explicit terms do not discriminate but have the practical effect of discriminating against the protected class, should be considered as violating Article 24. As referred to, the amended Commentary to Article 24 states that the non-discrimination provision should not be extended to cover situations of "indirect" (or in the CJ language "covert") discrimination.[800] However, the fact is that if the Article 24 aims at protecting against different treatment for tax purposes one may wonder if it is not indeed preferable to give an interpretation of the targeted law to avoid disguised forms of discrimination against the protected situations under the different paragraphs of Article 24. From my perspective, the reference in the Commentary[801] that Article 24 does not include situations of indirect discrimination is clearly addressed to prevent that non-discrimination clauses are interpreted similarly to EU Law where different tax treatment based on residence is often considered as illegitimate distinction, while differently for tax treaty purposes, it is an accepted and fundamental form of differentiation. This is actually acknowledged by the Commentary itself when considering that Article 24 prevents forms of disguised forms of discrimination which are protected under its different clauses. In this sense the Commentary rejects a formalistic approach and appears to open the door here to address forms of (indirect) discrimination whenever States use criteria

[796] See American Law Institute, *Federal Income Tax Project: United States Income Tax Treaties* (1992), pp. 260-261.
[797] See paragraphs 10 to 12 of the Commentary to Article 24 (1) of the OECD MTC.
[798] The fact is that a foreign entity does not pay tax in the State of source but that it is not because it is exempt as a charitable organization, but because it is not subject to tax in that State.
[799] See Mary C. Bennett, "The David R. Tillinghast Lecture: Nondiscrimination in International Tax Law - A Concept in Search of a Principle", 59 *Tax Law Review*, p. 468.
[800] See Craig Ecliffe, "Unfinished Business: Domestic Thin Capitalization Rules and the Non-Discrimination Articles in the OECD Model", *Bulletin for International Taxation* 1, IBFD (2013), p. 38 stating that the better view is that the non-discrimination articles in the OECD Model operates only in respect of overt and not covert discrimination.
[801] See para. 1 of the Commentary to Article 24 of the OECD MTC.

which are equivalent to the protected clauses in all but the name. Naturally, that the next issue derives from the fact that the Commentary does not provide any further guidance as to what circumstances can be said to constitute disguised discrimination and thus gives some leeway as to what actual standard is required for concluding that a particular situation constitutes a form of disguised discrimination.

A pivotal factor to the previous analysis is that tax treaty non-discrimination clauses have a narrower scope and do not provide for any justifications is the comparability standard. The different clauses of Article 24 describe the hypothetical situation to be considered when construing the appropriate comparator. Differently the fundamental freedoms are vaguer and the CJ reasoning is often inconsistent and unpredictable as to what is the proper comparator to be used. Starting from a prima facie comparison between domestic and cross-border situations, the CJ varies its criteria as to determine the objective comparison of a situation that may range from a factual comparison, to a legal comparison (subject-to-tax/not subject-to-tax), to looking at the purpose/aim of the legislation and even to not engaging in a comparison at all. The "elastic" comparability used by the CJ often focusing its analysis merely on the existence of a disadvantage from a cross-border perspective, considerably broadens the scope of the treaty freedoms while increasing the importance of justifications as a factor to allow balancing the internal market purpose with the interest of Member States.

One of the most interesting questions when dealing with tax discrimination is whether the foreign tax treatment should be relevant in order to determine whether particular rules are incompatible with the non-discrimination obligations[802] and follow an *overall approach.*[803] In EU Law, the general principle is that the tax treatment in the other jurisdiction for the purposes of determining whether a domestic tax provision is compatible with the fundamental freedoms. If Member States retain their tax sovereignty in the field of direct taxation this means that a breach of the freedom of movement will arise, in principle, due to the discriminatory legislation of one Member State. However as analyzed before, the CJ has in contrast taken into account the tax treatment in the other Member State. For instance, in the field of cross-border deductions the Court ruled that: (i) non-resident individuals[804] which receive no significant income in their State of residence should be entitled to deduct personal and family circumstances in the State of employment because that deduction was not possible in their residence State, and that (ii) losses generated in one Member State should be taken into account in another Member State when those losses cannot be

[802] See, in general, Mary C. Bennett, "The David R. Tillinghast Lecture: Nondiscrimination in International Tax Law: A Concept in Search of a Principle", 59 *Tax Law Review*, pp. 477-480.
[803] For further developments on the overall approach see *infra* Part IV.
[804] See, *inter alia*, cases ECJ 14 February 1995, C/279/93 *Finanzamt Köln-Altstadt v. Schumacker*, para. 36; ECJ 14 September 1999, C-391/97 *Gschwind v Finanzamt Aachen-Außenstadt*, para. 27; ECJ 12 December 2002, C-385/00 *De Groot v Staatssecretaris van Financiën*, para. 89; and ECJ 1 July 2004, C-169/03 *Florian W. Walletin v Riksskatteverket*, para. 17

deducted in the Member State where they arose,[805] In those cases, the CJ tried to achieve a balance[806] between the allocation of taxing powers of Member States and the fundamental freedoms by ensuring that losses are deducted once, but no more than once. Another example is in the field of exit taxes in which the CJ referred to the need to consider[807] or not[808] the treatment in another Member State. Another trend in the Court's case law[809] is the development of a theory of neutralization of discrimination[810] in the case of discriminatory treatment at source on dividend distributions. This neutralization occurs when the tax withheld at source is credited in the State of residence of the shareholder based pursuant to the applicable tax treaty. In such case, the effects on the different treatment at source (withholding tax in cross-border situations as per comparison with a withholding tax exemption in purely domestic situations) is compensated whenever such tax withheld at source can, through the application of the relevant tax treaty, be set off against the tax due in the State of residence in the full amount of the difference in treatment.

The situation is different regarding tax treaty non-discrimination. The treaty language is clear, in that when determining the existence or not of discriminatory treatment, only the taxation at source should be considered[811] for the construing the comparator. In other words, only a "source-jurisdiction comparison" is relevant. This conclusion is implied in the terms provided in the different paragraphs of Article 24 that use expressions suggesting that only the taxation in the source country is relevant.[812] The reference in paragraphs 1 and 3 to the taxation in "*the other Contracting State*" or in paragraph 5 which lays down that foreign-controlled enterprises shall not be subject to discriminatory taxation in the State where the

---

[805] See cases, ECJ 13 December 2005, C-446/03; *Marks & Spencer plc V David Halsey (Her Majesty's Inspector of Taxes)*, para. 55; ECJ 28 February 2008, C-293/06 *Deutsche Shell GmbH v Finanzamt für Groβunternehmen in Hamburg*, para. 44; and ECJ 15 May 2008, C-414/06 *Lidl Belgium GmbH & Co. KG v Finanzamt Heilbronn,* para. 50.

[806] See Servaas van Thiel, "The Direct Income Tax Case Law of the European Court of Justice: Past, Trends and Future Developments", 62 *Tax Law Review* 2008-2009, p. 163 and Dennis Weber, "In Search of a (New) Equilibrium Between Tax Sovereignty and the Freedom of Movement Within the EC", 34 *Intertax* 12, Kluwer Law International (2006) pp. 599-600.

[807] ECJ 7 September 2006, C-470/04 *N v Inspecteur van de Belastingdienst Ooost/kantoor Almelo*.

[808] ECJ 6 September 2012, C-38/10 *European Commission v Portuguese Republic*; ECJ 29 November 2011, C-371/10 *National Grid Indus BV/Inspecteur van de Belastingdienst Rijnmond/kantoor Rotterdam*.

[809] See settled case law in cases ECJ 8 November 2007, C-379/05 *Amurta SGPS v Inspecteur van de Belastingdienst/Amsterdam*; ECJ 19 November 2009, C-540/07 *Commission of the European Communities v Italian Republic*, para. 37, ECJ 3 June 2010, C-487/08, *European Commission v Kingdom of Spain*, para. 59; and ECJ 20 October 2011, C-284/09 *European Commission v Federal Republic of Germany*, para. 67.

[810] See Philippe Martin, "Dividends and Withholding Taxes," in G. Maisto (ed.) *Taxation of Intercompany Dividends under the EU Fundamental Freedoms?*, EC and International Tax Law Series, Vol. 8, IBFD (2012) pp. 27-28, or George Kofler "Tax Treaty "Neutralization" of Source State Discrimination under the EU Fundamental Freedoms?" *Bulletin for International Taxation* 12 IBFD (2011), pp. 684-690.

[811] See James G O´Brien, "The Nondiscrimination Article in Tax Treaties", 10 *Law & Policy in International Business* (1978), p. 559 and Stanford H. Goldberg and Peter A. Glicklich "Treaty-Based Nondiscrimination: Now You See It Now You Don't", 51 *Florida Tax Review* 1 (1992), p. 68.

[812] Specifically and as regards paragraph 5 see concurrently Niels Bammens, *The Principle of Non-Discrimination in International and European Tax Law*, IBFD Doctoral Series no. 24 (2012), p. 1022 stating that this paragraph does not take into account the effects at the level of the shareholder.

enterprise is located clearly suggest that the assessment of discriminatory treatment is made from a single (host) State perspective.

While this conclusion appears to be clear, still it is possible once again to find case law where, within the scope of tax treaties, the CJ appears to have followed a global approach. This is particularly the case in a decision[813] of the *Verwaltungsgerischshof* (VwG) - the Austrian Supreme Court - involving PE losses. The taxpayer was a company resident in the Netherlands with an Austrian PE. During the year 1999, the PE incurred losses. As in 2000 the PE became profitable, the taxpayer requested the loss carry-forward of the losses previously incurred. The tax authorities rejected this request based on the fact that those losses had already been taken into account in 1999 in the Netherlands at the level of the Netherlands head office and could not be used twice. The taxpayer appealed this decision based[814] on the PE non-discrimination provision of Article 25 (3) of the DTC concluded between Austria and Netherlands (with wording identical to the OECD MTC). The argument being that a company resident in Austria would be entitled to the loss carry-forward which was rejected because it operated through an Austrian PE.

As stated above, paragraph 3 requires that a PE of a non-resident enterprise may not be taxed less favourably – in the sense of more burdensome taxation – than a resident enterprise that carries on the same activities. The purpose of the PE non-discrimination provision[815] is to avoid that enterprises operated by residents of one State are granted competitive advantages when compared with similar enterprises of non-residents.
The VwG agreed with the taxpayer's claim that there was a less favourable treatment in breach of the PE non-discrimination provision. Therefore, it confirmed that the Austrian PE should be assimilated to a resident company also regarding the treatment of losses.[816] But the VwG also considered relevant for deciding whether there was indeed a discrimination of the PE, the treatment of those losses in the State of the head office. The Netherlands applied a deduction-recapture rule. The amount of the previously deducted losses in 1999 was taken into account for reducing the amount of the double tax relief. For the Court, the denial of the loss carry forward in Austria would only be legal in the case the PE losses were taken into account twice. Putting it differently, there was discrimination in this case (also) because the situation at stake did not lead to a multiple loss deduction. It is quite remarkable that one of the references submitted by the Court to support this reasoning was the CJ judgment in the *Marks & Spencer* case. In *Marks & Spencer,* the CJ considered that the UK denial of cross-border loss relief amounted to a restriction to the freedom of

[813] Verwaltungsgerischshof, Case 2005/14/0036 of 16 February 2006.
[814] A further argument was raised by the taxpayer that there was a breach of the freedom of establishment under the former Article 43 of the TUE. The VwG disregarded this argument considering there was no need to analyse it because the tax treaty non-discrimination had already been ruled in favour of the taxpayer.
[815] See Kees Van Raad, *Nondiscrimination in International Tax Law*, Series on International Taxation no. 6, Kluwer Law and Taxation Publishers (1986), p. 126.
[816] See John F. Avery Jones, et al., "The Non-Discrimination Article in Tax Treaties-II", *British Tax Review* (1991), pp. 426-427.

establishment[817] which was justified by three factors "taken together",[818] among which the prevention of double use of losses.[819]

While the outcome of this decision is correct in the sense that the PE non-discrimination provision was applicable, I believe that the reasoning used by the VwG is questionable[820] when adopting a global approach and considering the combined effects both in Austria and in the Netherlands. There is nothing in the wording of paragraph 3 of Article 24 of the OECD MTC that suggests that such approach should be followed. On the contrary as referred to, the wording of paragraph 3 is clear; the computation of comparative burdensomeness for determining the existence of less favourable treatment of the PE is limited to a mere source country comparison irrespective of the consequences in the State of residence of the enterprise. This is clearly supported by the language in the Commentary[821] which reads:

> "the equal principle of paragraph 3 only applies to the taxation of the permanent establishment's own activities. That principle, therefore, is restricted to a comparison between the rules governing the taxation of permanent establishment's own activities and those applicable to similar business activities carried on by an independent reside enterprise."

This paragraph seems to confirm that Article 24 (3) is restricted to the profits of the PE and does not extend to the taxation of the enterprise as whole.[822] In other words, the assessment of the discriminatory treatment is made in isolation without taking into account the effects at the level of the head office.

The rejection of the global approach implies that the treatment of the losses in the Netherlands should have not been relevant for the purpose of the VwG analysis.[823]
A further argument can be derived from the second sentence of Article 24 (3). This sentence states that the PE non-discrimination provision does not cover tax allowances, deductions and other forms of tax relief granted in the source state to resident individual entrepreneurs that relate to their personal and/or family situation. This sentence applies

---

[817] ECJ 13 December 2005, C-446/03 *Marks & Spencer plc v David Halsey (Her Majesty's Inspector of Taxes),* paras. 32-34.
[818] ECJ 13 December 2005, C-446/03 *Marks & Spencer plc v David Halsey (Her Majesty's Inspector of Taxes)*, para. 51.
[819] ECJ 13 December 2005, C-446/03 *Marks & Spencer plc v David Halsey (Her Majesty's Inspector of Taxes)*, para. 47.
[820] Concurrently, see Niels Bammens, *The Principle of Non-Discrimination in International and European Tax Law*, IBFD doctoral series no. 24 (2012), p. 217.
[821] See parag. 41 of the Commentary to Art. 24 of the OECD MTC.
[822] See Werner Haslehner, *Das Betriebsstättendiskriminierungsverbot im Internationalen Steuerrecht,* Series on international tax law 58, Linde (2009), pp. 101-102, or Luc Hinnekens and Philip Hinnekens, IFA General Report "Non-discrimination at the crossroads of international taxation", *Cahiers de droit fiscal international* 93A (2008), p. 31.
[823] The VwG issued a similar decision concerning an identical issue in case 2007/14/0048 of 28 November 2007 which involved an Austrian PE of a company resident in Switzerland.

exclusively to individuals regarding their personal expenses and was designed to avoid the double deduction[824] both in the State of residence of the individual through the application of its domestic law and in the PE State by virtue of the non-discrimination.[825] Therefore, in principle, business losses should be always deducted. In addition, the inclusion of this sentence confirms that there is as a rule a per-country approach under tax treaty non-discrimination and therefore, one should look exclusively at the treatment of the PE without regard to the consequences in the State of residence of the head office.

The correct approach may be found in a previous decision of the BFH.[826] The case involved a company resident in the Philippines that operated in international traffic and maintained a PE in Germany. During the years of 1985 to 1989, the PE incurred losses. Under German tax law, profits of a non-resident airline were deemed to correspond to 5% of the remuneration derived from transports within Germany or from Germany to foreign countries. Under Article 8 of the DTC concluded with the Philippines, Germany was entitled, as the PE State, to tax 1.5% of the gross revenue derived from sources in that State. The taxpayer claimed the deduction or loss carry-forward of the losses incurred. It argued that the impossibility to use those losses would amount to a violation of the tax treaty PE non-discrimination clause under Article 25 (2) of the DTC as otherwise, a German company would be entitled to deduct or carry-forward the losses.
The BFH started by observing that the method of assessment of tax of a PE (either by means of withholding tax or taxation on a gross-basis) did not constitute a discriminatory treatment as long as it did not lead to a higher tax burden of the PE when compared with domestic companies. However in the case of losses and since comparable domestic companies would have the possibility to deduct or carry-forward those losses, that constituted discrimination in breach of the PE non-discrimination clause. Particularly important was the fact that the BFH considered irrelevant the dual use of losses. It considered that the possible use of the losses at the level of the head office was based on the Philippines legislation and therefore, any reaction should be left to the legislation of that State. The BFH, therefore, adopted a clear per-country approach.[827]

One can only but speculate whether the VwG would reach the same conclusion today after the CJ judgment in the *Philips Electronics* case.[828] One of the issues in this case was precisely the dual use of the losses both in the UK through the loss relief made by a PE to another UK subsidiary and at the level of the head office located in the Netherlands. The CJ refused this argument as a possible justification to the discriminatory treatment by

---

[824] See Kees Van Raad, "Non-Residents – Personal Allowances, Deduction of Personal Expenses and Tax Rates", *World Tax Journal* June 2010 (IBFD), pp. 156-157.
[825] See para. 36 of the Commentary to Art. 24 of the OECD MTC.
[826] See Bundesfinanzhof, Case I R 54/96, 22 April 1998, *DStRE* (1998), p. 590.
[827] The per-country approach in this judgment was later re-affirmed in another decision of the BFH in case II R 51/03 of 10 March 2005, *IStR* (2005), pp. 745-747.
[828] CJ 6 September 2012, Case C-18/11 *The Commissioners for Her Majesty's Revenue & Customs v Philips Electronics UK Ltd*., paras. 28-33. For further analysis on this case see *infra* Part IV.

following a per-country approach: the double use of losses had no effect on the power of the UK to tax the PE and was therefore irrelevant from an UK perspective.

There is, therefore, a difference that can be derived from the CJ case law regarding the treatment of cross border and domestic losses. In the first case, the issue of double use of losses is considered as an accepted justification whereas in the second case it is not. In other words: in the first case, the CJ follows a global approach whereas in the second a per-country approach. This last same approach should be applied regarding tax treaty interpretation. Since tax treaty discrimination involves a mere per-country approach - unless otherwise expressly stated as in the second sentence of Article 24 (3) – the possible use of losses in other jurisdiction should not play any role in the finding of discrimination in the PE State.

It is further interesting to note that aside from *Marks & Spencer* the VwG relied on the arguments used in a previous decision concerning cross-border losses. The case[829] involved an Austrian resident individual with a participation in German general partnership that incurred losses. This partnership was a transparent entity and treated for treaty purposes as a PE. Article 15 of the DTA Austria/Germany (which corresponds to Article 23 A of the OECD MTC) provided for the exemption with the progression method. The question at stake was whether it was possible to deduct in Austria the losses generated in Germany. Previous to this decision, of the VwG, Austria had followed a principle of symmetry: to exempt positive income under the tax treaty would correspond that foreign losses were also not taken into account. For the first time, the VwG accepted to disrupt this symmetry and considered that Austria should take into account the foreign PE losses. The arguments of the Court were based on the fact that the application of a tax treaty should not lead to higher taxation. The application of the symmetry principle disregarding foreign losses would lead to an increased taxation[830] with the result of double tax treaties actually imposing taxation rather than allocating taxing rights.[831] Since the foreign losses would be reducing the taxpayer's overall income, they should have been considered for the purpose of imposing domestic income tax.[832]

---

[829] See for a description, Daniela Hohenwarter, "Country Survey Austria" in G. Maisto (ed.) *Tax Treaties and Domestic Law - EC and International Tax Law Series,* Vol. 2 IBFD, (2006), pp. 185-190, Gerald Gahleitner and Clemens Nowotny, "Austrian Court Rules on the Treatment of Cross-Border Losses under Tax Treaties with Exemption Method", *Bulletin* 4 IBFD (2002), pp. 155-158 or Tatjana Polivanova-Rosenauer "The Interpretation of Article 23 of the OECD Model", *European Taxation* 3 IBFD (2002), pp. 133.

[830] The fact that losses incurred by a company in one of its PEs abroad are not taken into account for the taxation of the company leads to a taxation of its global profit which is higher that the net profit effectively achieved by the company worldwide. See Henri Torrione, "Treatment in Switzerland of Transnational Operating Losses for a Foreign Company with a Swiss Permanent Establishment and for a Swiss Company with a Permanent Establishment Abroad", *Intertax* 12 (1995), p. 635.

[831] See Christian Wimpissinger, "Cross-border transfer of losses, the ECJ does not agree with Advocate General Sharpston" *EC Tax Review* 4 (2008), p. 176.

[832] See Franz Wassermeyer, "Anmerkung: Ausländische Betriebsstättenverluste: DBA-Frestellung" *IStR* (2001), pp. 754-755.

But the VwG also stated that tax treaties are aimed at avoiding not only double taxation but also double non-taxation and therefore, a double use of those losses should be avoided as it represented a distortion of competition. The Austrian Supreme Court followed a global approach. It considered that the previously deducted foreign losses should be recaptured in subsequent years in Austria taking into account the loss carry-forward in Germany. Based on an interpretation of the DTC Austria/Germany, the VwG concluded that the term "income" should be understood for the purpose of the exemption method as corresponding to the amount increased with the losses previously deducted. This would allow achieving a single taxation of such income. The reasoning adopted in however debatable[833] as both the deduction of foreign losses and the adoption of a deduction-recapture mechanism derive not from tax treaty interpretation but rather from domestic law[834] (or by inclusion of a specific treaty clause[835]). In fact, the OECD MTC (and the modelled tax treaties) does not provide any rule for the treatment of cross-border losses. This statement is confirmed by the following reference in the Commentary:[836]

> "As the solutions depends primarily on the domestic laws of the Contracting States and as the laws of the OECD Member countries differ from each other substantially, no solution can be proposed in the Article itself, it being left to the Contracting States, if they find it necessary, to clarify the above-mentioned question and other problems connected with losses bilaterally, either in the Article itself or by way of a mutual agreement procedure."

This clearly demonstrates that the deduction of foreign losses and the partial exemption of the foreign PE profits in subsequent years within the scope of the exemption method cannot be deduced by the treaty itself but rather from domestic law.

In any event these types of situations are not covered by tax treaty non-discrimination as they refer to outbound situations and not directly to the taxation of the PE. Therefore, whatever the mechanism adopted in domestic law for taking into account PE losses, that

---

[833] See Klaus Vogel, "Das oberste osterreichische Steuergericht erklart Verluste bei DBA-Freistellung fur abzugsfahig" *IStR* (2002), p. 91.

[834] See Franz Wassermeyer, "Anmerkung: Ausländische Betriebsstättenverluste: DBA-Frestellung" *IStR* (2001), pp. 754-755 who considers that the decision of the VwG was not entirely clear on this point. For the opposite outcome, see the decision of the Swiss Federal Court of 30 October 1987 in which the Court rejected the argument of the Swiss tax authorities of adopting a recapture mechanism to prevent the double use of the losses, due to the absence of such mechanism either in domestic law or the applicable tax treaty. See on this Henri Torrione, "Treatment in Switzerland of Transnational Operating Losses for a Foreign Company with a Swiss Permanent Establishment and for a Swiss Company with a Permanent Establishment Abroad", *Intertax* 12 (1995), pp. 645-646.

[835] See Article 24 (1) (d) of the 1978 tax treaty concluded between Switzerland and Belgium which reads:

> "When in accordance with Belgian law, losses of a Belgian enterprise which are attributable to a Swiss permanent establishment, have been effectively deducted in Belgium for the profits of that enterprise, the exemption provided for at (a) above shall not apply in Belgium to the profits of other taxable periods attributable to that permanent establishment, to the extent that those profits are not also exempt from tax in Switzerland by reason of their having been set off against the said losses."

[836] See para. 44 of the Commentary to Art. 23-A of the OECD MTC.

cannot be extended via the application of the tax treaty non-discrimination article for the purpose of taking into account foreign losses.

11.3 Application of tax treaty provisions and EU Law with particular reference to tax groups

11.3.1 The issue

If two EU Member States enter into a tax treaty, potentially both the TFEU provisions and the non-discrimination clauses in tax treaty may apply. If typically these two sets of provisions have a different and independent scope therefore applying to different situations, it is also possible that these provisions apply to the same situation at the same time. Tax treaties and EU law provide two different sets of standards and there is no conflict of application between these two sets of provisions.[837] The fact that a particular domestic law measure is found to be compatible with a tax treaty non-discrimination provision does not necessarily isolate such measure from assessment under the compatibility with the fundamental freedoms and the same holds true to the reverse situation of a measure found to be in line with the fundamental freedoms but still subject to scrutiny under the tax treaty non-discrimination provision.

This means that these two norms create two layers of obligations for the respective States[838] and they are not mutually exclusive. Therefore, they can be applied in a parallel manner[839] and the taxpayer is then free to choose either one of them or both.[840] Or, alternatively, they can be applied together in a combined manner.

11.3.2 Alternative application

The following case law exemplifies the alternative application of tax treaty and EU law provision regarding the same situation.

---

[837] In this regard, Bammens concludes that there is actually no need for tax treaty provisions to be interpreted in line with the fundamental freedoms precisely because they constitute two parallel and non-conflicting sets of norms which can be applied alternatively or combined. See Niels Bammens, "The Interaction between the Interpretation of Article 24 OECD MTC and the Non-discrimination Standard Developed by the CJEU", *EC Tax Review* 2013/4, Kluwer Law International BV, p. 184.

[838] See Bruno Garrido, "Interaction between the Interpretation of Non-Discrimination Provisions in Tax Treaties and in the EC Treaty: An Apparent Rather than Real Conflict", *EC Tax Review* 4, Kluwer Law International BV (2009), pp. 174-175.

[839] See Moris M. Lehner, "The Influence of EU Law on Tax Treaties from a German Perspective", *Bulletin* 8/9 IBFD (2000), p. 466.

[840] Expressly see Luc Hinnekens, "Compatibility of Bilateral Tax Treaties with European Community Law – Application of the Rules", *EC Tax Review*, 1995/4, Kluwer Law International BV, pp. 224-225. Hinnekens stresses the fact that typically both sets of norms are not in conflict and taxpayers may rely on both norms to make their case against tax discrimination.

11.3.2.1 Commerzbank

The case[841] involved a German bank ("the taxpayer") which was trading in the UK through a branch. During the course of its banking business, this branch made loans to US corporations and received interest on those loans. The sums received by way of interest were included in the branch profits and UK corporate tax was paid. Under the DTT UK/US, interest paid by a US company was exempt from UK income tax unless the recipient of the interest was a UK resident or national. The taxpayer successfully claimed for the recovery of the previously paid tax based on the fact that it was not considered a UK resident for treaty purposes. It further claimed the payment of interest on the tax wrongfully paid. That repayment supplement was denied by the UK Revenue on the basis that the eligibility for such payment depended on the bank being resident in the UK. The taxpayer appealed this decision considering that the residence requirement constituted a breach of the tax treaty non-discrimination provisions or the freedom of establishment under EU Law.

As regards the tax treaty arguments, the taxpayer claimed that the residence requirement was in breach either of the nationality or the PE non-discrimination clauses.

Under the first claim, the purpose was to demonstrate that the refusal to the repayment supplement constituted a taxation or a requirement connected with taxation which was other or more burdensome when compared with UK nationals. As regards the *existence of a discriminatory treatment*, the UK Court agreed with the taxpayer by considering that the fact that a German national was not entitled to such repayment constituted a more burdensome requirement as regards the payment of tax. It seems correct that the taxation itself was not more burdensome as there was no impact on the quantum of tax. But it seems also doubtful that the non-entitlement to the interest payment was a more burdensome requirement as stated by the Court. In fact it seems that the word *requirement* means something that the taxpayer is required to do[842] as the OECD Commentary[843] refers to "*formalities connected with taxation (returns, payments, prescribed times, etc.)*."
The UK Court, however, rejected the existence of a discrimination based on nationality when testing the disadvantageous treatment with the standard of comparison. The nationality clause requires that the object of comparison is made between nationals "in the same circumstances" being residence a relevant factor. This, therefore, required comparing a German resident national with a UK branch with a hypothetical UK national also resident in Germany and similarly with a UK branch. The Court correctly concluded that they would be treated in the same manner, and that there was no basis upon which to allege discrimination on the ground of nationality.

---

[841] See *Regina v Inland Revenue Commissioners Ex p. Commerzbank*, [1991] S.T.C. 271, 12 April 1991.
[842] See John F. Avery Jones, "Non-discrimination: Commerzbank – round two", *British Tax Review* 10 (1991), p. 406 and footnote 8.
[843] See paragraph 15 of the Commentary to Article 24 (1) of the OECD MTC.

The second claim was based on the PE non-discrimination clause as the taxpayer considered that the lack of repayment supplement constituted less favourable levied taxation. The UK Court rejected this argument by referring to the narrower scope of this clause as although the repayment supplement was connected with the levy of taxation, it did not affect the amount of that levy. It seems that here, the Court followed a strict reading of less favourable levy as meaning only the imposition of more tax. An interesting argument that has been made[844] is that if one considers that the payment of interest by non-residents which would not otherwise be due by residents would clearly fall within the scope of the PE non-discrimination clause, could not the reverse scenario of absence of interest on a tax repayment also be within the scope of such clause.
The invoking of the tax treaty non-discrimination clauses of the tax treaty Germany/United Kingdom was not sufficient for Commerzbank, which however was able to avail of the broader scope of interpretation of discrimination under the freedom of establishment of the TFEU. The approach of the UK authorities was trying to somehow sustain a global approach. In the case the taxpayer had been a UK resident company, it would have been entitled to the repayment of the interest but it would also have had to pay tax in this particular case. The PE benefited from a tax exemption. Thus, to grant a repayment in such situation would render even more favourable the treatment that Commerzbank already enjoyed.[845]

The CJ considered[846] that the fact the repayment supplement of overpaid tax was only available to residents constituted a disadvantage to non-residents. The fact that the exemption from tax which gave rise to the refund was merely available to non-resident companies was not a justification for the discriminatory treatment. The Court, therefore, followed a strict standard of comparison between PE and subsidiaries, focusing narrowly on the PE itself and the disadvantage that arose under this concrete situation and disregarding the events in which the PE taxation was more advantageous and differed from a domestic company.[847] The judgment illustrates the broader scope of protection of the freedom of establishment: similar to the PE tax treaty non-discrimination, Article 49 TFEU provides protection for companies of one Member State to pursue their activities in the other Member State through a branch or agency; however, different from the PE tax treaty non-discrimination, its material scope of protection is not limited to taxation *less favourably*

[844] See John F. Avery Jones, "Non-discrimination: Commerzbank – round two", *British Tax Review* 10 (1991), p. 406.
[845] See Daniel Sandler, "Commerzbank – fast track to harmonization?", *British Tax Review* 6 (1993), p. 518.
[846] See case ECJ 13 July 1993, C-330/91 *R. Inland Revenue Commissioners Ex p. Commerzbank AG*, para. 18-19.
[847] See in this regard, Kees Van Raad, *Nondiscrimination in International Tax Law*, Series on International Taxation no. 6, Kluwer Law and Taxation Publishers (1986), p. 94, who considers that for tax treaty purposes the non-discrimination should be determined with reference to the concrete instance under analysis and therefore, States cannot remedy the discriminatory treatment in such concrete instance based on a possible favourable treatment in another instance.

levied but it covers a more general protection of disadvantageous treatment. The alternative use of the EU law reasoning, therefore, allowed overcoming the limitation of tax treaty non-discrimination in this case.

11.3.2.2 X AB and Y AB

The alternative application of tax treaty non-discrimination provisions and EU law also arose in the X AB and Y AB case. A Swedish parent company X AB and its domestic subsidiary Y AB jointly applied for ruling to the Swedish ruling commission. The purpose was to benefit from the group taxation system as regards certain intragroup transfers. One of the envisaged corporate reorganizations involved that Y AB would be held in 15% by a Dutch and German subsidiary of its Swedish parent company X AB with the remaining shareholding being held by directly by X AB or Swedish subsidiaries of this company.

Similarly to the previous case, also here invoking the non-discrimination clauses in tax treaties was insufficient for the claim. Y AB relied on the combined application of the foreign ownership clause of both tax treaties concluded between Sweden and Netherlands and Germany in order to extend the effects of the Swedish group regime to indirect participations. However, the Swedish authorities denied such possibility arguing the impossibility to combine the effects of two non-discrimination provisions of two different tax treaties. The Supreme Administrative Court confirmed this reasoning arguing that the need to apply the non-discrimination ownership clauses of both the tax treaties concluded with Netherlands and Germany and such cumulative or simultaneous application was not possible considering the bilateral nature of tax treaties.

X AB and Y AB appealed from this decision and the question was referred to the CJ. The CJ concluded[848] that there was indeed a breach to the freedom of establishment since there was a difference in treatment based on the seat of the subsidiaries. Once again the broader interpretation of the freedom of establishment allowed overcoming the limitations[849] of tax treaty non-discrimination clauses. The CJ considered that the Swedish legislation contravened the freedom of establishment taking into account the difference in treatment on the basis of the residence of the subsidiaries. This clearly goes beyond the tax treaty non-discrimination clauses since they do not cover outbound situations. As referred above, the argument raised by Y AB to challenge the Swedish legislation was based on the discriminatory treatment due to the residence of the parent company in accordance with the foreign ownership provision of (paragraph 5) of the tax treaties concluded with Germany and the Netherlands[850].

---

[848] ECJ 18 November 1999, Case C-200/98, *X AB and Y AB v Riksskatteverket*.

[849] In this case in my view erroneous interpretation considering the previous argumentation developed as regards the cumulative application of non-discrimination provisions of different tax treaties. See on this, 10.2.3 *supra*.

[850] See Niels Bammens *The Principle of Non-Discrimination in International and European Tax Law*, IBFD Doctoral Series no. 24 (2012), p. 693.

11.3.2.3 Felixstowe Dock

Another example of this alternative or parallel application of the two sets of rules is illustrated by the UK case, *Felixstowe Dock*.[851] Briefly recalling the facts of the case[852], Hutchison was a worldwide group of companies headed by Hutchison Whampoa Limited, a Hong Kong resident company. Some of the UK subsidiaries of the group (the 'Claimants') claimed group relief in respect of losses made by one member of the group, Hutchison 3G UK Limited (the 'Surrendering company'). At the time the Surrendering company was owned by a consortium of companies through the intermediate holding company, Hutchison 3G UK Investment Sarl, a company resident in Luxembourg. Under the applicable UK domestic law, a consortium relief is available between two companies where one of the companies is a member of a group of companies and the other is owned by a consortium and another company (the 'link company') is a member of both the group and the consortium. The grant of relief to the group member was conditional on the link company itself being able to claim consortium relief. For that purpose, the link company could only claim the relief if it is a UK tax resident or it carries on a trade in the UK through a permanent establishment. Since this requirement was not met in the case of Hutchison 3G UK Investment Sarl, the surrender of the losses by the surrendering company was rejected by the HMRC.. Further to the denial of the surrender of the losses, the claimants argued that such requirement was inconsistent with the freedom of establishment set forth in Article 49 of the TFEU and with Article 26 (4) (identical to paragraph 4 of Article 24 of the OECD MTC) of the Double Tax Treaty concluded between UK and Luxembourg. Therefore, the taxpayer used alternatively both arguments in order to address the same situation. The UK Courts confirmed that there was indeed a discriminatory treatment pursuant to the foreign ownership provision. Subsequently, the CJ also confirmed that the denial of the group relief due to the location of such link company is a breach of the freedom of establishment[853].

11.3.3 Cumulative application

Being a separate rule of non-discrimination in tax matters, Article 24 is independent of other rules providing protection against discrimination. In particular, it supplements non-discrimination rules already existing in other international agreements or in domestic law[854]and thus, its combined application should also be possible.[855] The possibilities may

[851] *The Felixstowe Dock and Railway Company Ltd & Ors v Revenue & Customs* [2011] UKFTT 838 (TC) of 19 December 2011.

[852] The case was already analyzed throughout this Part when dealing with the interpretation of paragraphs 1 and 5 of Article 24 of the OECD MTC.

[853] CJ, 1 April 2014, *Felixstowe Dock and Railway Company Ltd and Others v The Commissioners for Her Majesty's Revenue & Customs*. For an analysis of the CJ decision in this case see 14.2.1.3 *infra*.

[854] See, Klaus Vogel, *On Double Taxation Conventions: A Commentary to the OECD, UN and U.S. Model Conventions for the Avoidance of Double Taxation of Income and Capital, With Particular Reference to German Treaty Practice*, third edition (1997) p. 1281

involve combining the application of the two sets of non-discrimination provisions to actually allow extending the EU law benefits to situations which have a third country element and that would be limited to claim those benefits due to the scope limitations of the fundamental freedoms, that is, the fact that only the free movement of capital has a territorial scope applicable to third countries.[856]

11.3.3.1 *Halliburton*

A clear-cut example of cumulative application of a non-discrimination provision of tax treaties with the forbidden discriminatory treatment under the fundamental freedoms can be identified in the *Halliburton* case. This case involved the definition of a group taxation perimeter.

---

[855] See, *inter alia*, Werner Haslehner in "Tackling complex discrimination in international taxation", *British Tax Review* 5 (2012), p. 617, G.F. Boulogne, "Group Taxation within the European Union: Did Papillon and Art. 24 (5) of the OECD Model Tax Convention Create a Butterfly Effect?", 51 *European Taxation* 5, IBFD (2011), p. 177.

[856] Haslehner refers to situations where combining the application of the two sets of non-discrimination provisions actually allows extending the EU law benefits to third-country nationals. See Werner Haslehner, "Nationality Non-discrimination and Article 24 OECD – Perennial Issues, Recent Trends and New Approaches", D. Weber (ed.) *Non-discrimination in tax treaties: selected issues from a global perspective* IBFD, Amsterdam (forthcoming). His example is based on the *Schumacker* case and the possibility of a national of a third country resident in a Member State but who is employed in another Member State where he earns all his income, to claim personal allowances. If the rules of the Member State of employment are applicable both to residents and to nationals of other Member States (as a consequence of the implementation of EU law), the third country national could rely on the combined effect of EU law and the nationality non-discrimination clause in paragraph 1 of Article 24 to effectively claim the benefits of personal allowances based on the tax treaty between the State where he is a national and the State where he performs the employment. While understanding Haslehner's reasoning, I wonder if this case involves an actual combined application of both sets of norms. The taxpayer in this case is relying on the treatment provided by the State of employment's domestic law which happens to give those personal allowances not only to residents of that State but also to nationals of other Member States who obtain the majority of income therein. In that sense, the taxpayer can basically claim a difference in treatment based on nationality which derives directly from the domestic law of the Member State of employment. In other words, this is not a benefit that is only accessible through combining the effects of both free movement (of workers in case) as well as the tax treaty non-discrimination clause. In this sense, here there is more an apparent (or indirect) combined effect of both sets of norms when compared with the other examples that I refer to above where there is an effective combined application, i.e. the access to the benefit does not derive solely from domestic law (as in the example above even that resulting in that case from EU law implementation) but from the actual application of both the discrimination in tax treaties and EU Law. In my view, this reasoning is confirmed by the OECD in its draft report when stating that Article 24 can result in an indirect application of the TFEU provisions insofar as they are covered by the clauses of Article 24. The example refers precisely to the type of rules discussed above which allow non-resident taxpayers who are residents of a European Member State to opt to be treated as residents when they derive more of 90% of the income in that territory. In the example, a national of Austria resident in the US and earning at least 90% of its income from Austria can opt for such treatment whereas a US national and resident similarly earning 90% of income in Austria cannot. The possibility to extend the treatment to the US national could be found in paragraph 1 of Article 24 of the applicable treaty. See OECD Public Discussion Draft *Application and Interpretation of Article 24 (Non-Discrimination)*, 3 May 2007, page 29.

Halliburton was an international group with a US incorporated parent company which held both a German subsidiary and a Netherlands subsidiary. As part of an intra-group reorganization of the activities in Europe, the German subsidiary transferred to the Netherlands subsidiary its Netherlands permanent establishment, which included immovable property located in the Netherlands. Under Netherlands domestic tax law, transfer of immovable property was subject to real estate transfer tax which to be borne by the acquirer (in this case, the Netherlands subsidiary). However, Article 15 (1) (h) of the Netherlands Corporate Income Tax Act ("CITA") an exemption was granted within the scope of internal reorganization of companies belonging to a group. For that purpose, all the companies of the group had to be resident in the Netherlands, that is, not only the buyer and the seller but also the parent company of the group. The Netherlands tax authorities considered that the transfer of the immovable property in this case did not qualify for the exemption. The taxpayer claimed from that assessment, based on two instances of discrimination as per comparison with purely domestic Netherlands groups: (i) the foreign parent company, and (ii) the foreign sister.

The first situation was dealt with based on a provision contained in the DTC US/Netherlands. The *Hoge Raad* decided[857] - before the referral to the CJ - that the Netherlands subsidiary would not be deprived of the exemption considering the foreign ownership non-discrimination provision of the treaty with US. The fact that the Netherlands subsidiary – due to being owned by a US parent company – was subject to more burdensome taxation (not benefiting from an otherwise applicable real estate tax exemption if it had been held by a Netherlands parent) was a discriminatory treatment forbidden under Article 25 (4) of the DTC US/Netherlands.

The second situation concerned the actual transfer between the German and Netherlands subsidiaries. But in this case, the discriminatory treatment was not covered by the DTC Germany/Netherlands. In what regards a possible discrimination based on nationality under paragraph 1, the fact is that from the outset, the German company was not taxed at all in the Netherlands. The liability to transfer tax was on the purchaser and not on the seller, irrespective of nationality. With regard to the paragraph 3, the fact is that a Netherlands permanent establishment of a German company was not subject to unfavourable taxation when compared with a Netherlands subsidiary of a German parent company, since the permanent establishment did not have to bear any taxation, such as would occur with a subsidiary.

The need to invoke EU law is then explained by the fact that the situation could not be resolved under the applicable tax treaty. The question was referred to the CJ[858] and the issue was whether for the purposes of transfer of PE and the immovable property exemption there was a breach of the freedom of establishment. In that regard, since the exemption from tax

[857] See *Hoge Raad*, case no. 27843 of 23 December 1992.
[858] ECJ 12 April 1994, C-1/93 *Halliburton Services BV v Staatssecretaris van Financiën*.

on the acquisition of immovable property was dependent on the property being acquired from a Netherlands company and was not applicable if acquired from a similar company in another Member State, it constituted a violation of the freedom of establishment. Such freedom encompasses the possibility of an entrepreneur to choose the form through which it carries on its activities and that may be a branch, an agency or a subsidiary. The argument of the Netherlands government, according to which the legislation involved no discrimination of the transferor since the person liable to pay the tax was the Netherlands company, was considered irrelevant.

The CJ introduced a type of "subjective indirect discrimination"[859] considering that there was indeed a disadvantage for the transferor as the tax payment could affect the sale price and therefore, render the sale conditions more onerous. In other words, the subjective indirect discrimination arose as the discrimination of the German company was, via a different subject, the Netherlands company which had to pay tax.

11.3.3.2 Other possibilities

The combined application of tax treaties and EU law offers multiple interesting possibilities which can allow effectively extending the CJ reasoning to situations where there are third State elements. A possible example may involve a parent company located in a third State (for instance, in the United States) owning two foreign subsidiaries being one located in the UK, and the other in another EU Member State.

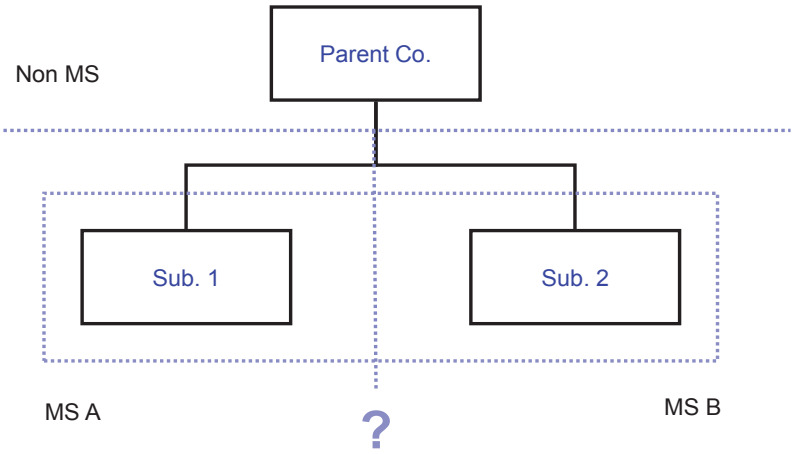

If this company resident in a EU Member State has incurred losses, may the UK subsidiary claim for the surrender of losses of its sister company? The arguments resemble the ones used in the *Halliburton* case: (i) the fact that the foreign parent company is resident in the US and not in the UK is a violation of the foreign ownership provision of the DTT US/UK;

[859] ECJ 12 April 1994, C-1/93 *Halliburton Services BV v Staatssecretaris van Financiën*, paragraph 20.

(ii) the inability to use the losses in the UK which were incurred by the sister company in another EU Member State may constitute a breach of the freedom of establishment if the conditions of the *Marks & Spencer* no possibilities test are met[860].

If it is accepted that the application of the *Marks & Spencer* no possibilities test does not provide any limitations as to the flow of negative income (that is, the surrender of losses whenever they are final) to upward situations (losses incurred from a subsidiary and surrendered to the parent company), then the combined application of tax treaties and EU Law would allow the cross-border surrender of horizontal (final losses).

11.4 Interim conclusions

The approach to non-discrimination in general and to group taxation regimes in particular can be analysed separately from an EU law or tax treaty perspective. However, a closer analysis shows that a causal link exists between these two realities: the interpretation of the non-discrimination requirement under the fundamental freedoms seems to be influencing the interpretation of the non-discriminatory obligations in tax treaties.
There are similarities as well as relevant differences between tax treaties and EU law. Still, there is case law evidencing that national courts within the EU approach the concept of non-discrimination in tax treaties influenced by EU law.

Tax treaties and EU law fulfil different purposes and there is no conflict of application between the two sets of provisions. They create two layers of obligations for the respective States and therefore they can be applied in a parallel manner. Therefore, it is possible that both the TFEU provisions and the non-discrimination clauses in tax treaties apply to the same situation. In that event, an alternative application of tax treaty and EU law provisions is possible and the taxpayer is free to choose either one of them or both.

Similarly, it is also possible to combine both the application of Article 24 and the TFEU freedoms. In that case, the use of non-discrimination provisions in tax treaties may constitute a valuable alternative to overcome the limitations in the (territorial) scope of the fundamental freedoms. This is applicable in the context of group taxation regimes considering that the application of the TFEU freedoms is restricted to the freedom of establishment. The combined application of tax treaty non-discrimination provisions with EU law allows to explore and, in certain cases, to expand the boundaries of the TFEU protection beyond mere intra-Community situations.

[860] For an analysis of the *Marks & Spencer* case and the no-possibilities test see 17.4 *infra*.

Part IV

Group Taxation and EU Law

Chapter 12

Group Taxation and EU Secondary Law

12.1 Introduction

Undisputedly, non-harmonized tax systems can constitute an obstacle for the trading within the EU. Essentially three tax-related obstacles are identified as affecting the internal market[861]: (i) restrictions to the fundamental freedoms, (ii) location factor for labour and capital resulting in tax competition and (iii) significant administrative issues and compliance burden.
Therefore, taxpayers are not from the outset banned from EU law protection and there is no exclusion as to the application of EU law in direct tax matters.

Taxation continues to be a central feature of state sovereignty, both as instruments of economic and social policy and because of its direct effect on economic operators. From the outset, therefore, Member States have not been willing to transfer their sovereign rights in this sphere or otherwise. Direct tax law, therefore, still remains one of the most protected areas of Member States competences[862] subject to unanimity voting in the Council pursuant to Article 95 TFEU. Consequently it is not surprising that harmonization has only been achieved to a very limited extent and scarce secondary legislation exists in this field. Nevertheless, currently there is some secondary legislation – Directives – which are relevant within the scope of tax groups as well as significant initiatives which impact on major issues when dealing with group taxation.

12.2 The Council Directives with effects on tax groups

12.2.1 The Parent-Subsidiary Directive

On 23 July 1990 the Council of Ministers adopted the Parent-Subsidiary Directive[863], which represents the first common regime on taxation of profit distributions. This Directive

[861] See Joachim Englisch "The European Treaties' Implications for Direct Taxes", 33 *Intertax* 8/9, Kluwer Law International BV (2005), p. 310.
[862] See Suzanne Kingston "A Light in the Darkness: Recent Developments in the ECJ's Direct Tax Jurisprudence", *Common Market Law Review* 44, (2007), p. 1321.
[863] Council Directive 90/435/EC of 23 July 1990, OJ L 225, 20 August. The scope of this Directive was extended in 2003 and a recast version was finally adopted on 30 November 2011. See Council Directive 2011/96/EU of 30 November 2011 on the common system of taxation applicable in the case of parent companies and subsidiaries of different Member States, OJ L 345, 29 December.

introduced common rules for qualifying cross-border intra-EU profit distributions, with the aim of neutrality from the point of view of competition and improvement of the functioning of the internal market by providing for equivalent treatment of purely domestic and cross-border distributions of profits. Ultimately this Directive aims to avoid that any restriction, disadvantages of distortions may hamper the effective functioning of the internal market.

The Parent-Subsidiary Directive provides for a withholding tax exemption on profit distributions from a subsidiary company resident in one Member State to its parent company located in another Member State and eliminate economic double taxation of such income at the level of the parent company[864] either by means of an exemption or an indirect tax credit. In this regard, Article 5 of the Directive requires the source Member State to exempt outbound profit distributions, from subsidiary companies resident in the source Member State to a parent company resident in another Member State, from withholding tax. In addition, Article 4 requires the parent company Member State to either exempt inbound profit distributions or to give a tax credit in the amount of corporation tax already paid by the subsidiary.
In order for the Parent-Subsidiary Directive to apply to a profit distribution the conditions set out in Articles 1 to 3 must be satisfied. First, the subjective scope set out in Article 1 must be met, that is, the profit distribution must be made cross-border between companies of Member States. Secondly, Article 2 requires both companies to have one of the legal forms listed in Annex I, to have their fiscal residence within the EU and to be subject to on of the corporation taxes listed in Annex I. Thirdly, Article 3 requires a minimum holding of 10%.

12.2.2 The Merger Directive

At the same time of the adoption of the Parent-Subsidiary Directive, Directive 90/434/EC of 23 July 1990[865] was also adopted with the objective of abolishing tax obstacles on cross-border company reorganizations in the EU. The Merger Directive in its original form regulated the tax treatment of cross-border intra-EU company reorganizations, that is, mergers, divisions, transfer of assets and exchanges of shares. The scope of application of the Merger Directive was further extended in 2005 to cover partial divisions and the transfer of the registered office of an SE or an SCE.[866]
The main objective of the Merger Directive is to remove possible distortions and to facilitate cross-border intra-EU company reorganizations. In that regard the Merger Directive seeks to ensure that the Member States do not impede the cross-border intra-EU

[864] See recital 3 of Council Directive 90/435/EC of 23 July 1990.
[865] Council Directive 90/434/EC of 23 July 1990 on the common system of taxation applicable to mergers, divisions, transfers of assets and exchanges of shares concerning companies of different Member States, OJ L 225, 20 August 1990.
[866] Council Directive 2005/19/EC of 17 February 2005, OJ L 58, 4 March 2005. A codified version of the Directive was approved in 2009 which Directive repealed and replaced the original Merger Directive and its amendments. See Council Directive 2009/133/EC of 19 October 2009, OJ L 310, 25 November 2009.

company reorganizations covered by the Merger Directive in any way, as cross-border intra-EU company reorganizations covered by the Merger Directive should be tax neutral in the same way as purely domestic reorganizations usually are. Therefore, cross-border intra-EU company reorganizations that are covered by the Merger Directive must not cause immediate direct tax consequences, either to the companies concerned or to their shareholders.[867] Underlying the existence of not triggering immediate taxation is the recognition that taxing these transactions would give rise to a considerable burden due to the amount of taxes which would not be balanced by the expected (although not immediate) economic benefits.

The mechanism to ensure this benefit is to provide for a tax deferral of the unrealised capital gains and tax-free reserves:[868] taxation is postponed until the momentat which the assets will be re-transferred. At the same time the Directive tries to balance fiscal interests of Member States, by ensuring that the transferring company may ultimately tax the assets at the date of their disposal.

In order for a cross-border reorganization to come under the scope of the Merger Directive, a company must satisfy certain requirements. First of all and in terms of *personal* scope for the application of the Directive: (i) a company must have the appropriate legal form listed in the Annex or be an SE or an SCE, (ii) it must have its fiscal residence in a Member State, and (iii) be subject to one of the taxes listed in the Annex thereto.[869]
In addition, there are also *material* requirements for the Directive to apply. From the perspective of a company participating in a reorganization – other than exchange of shares – the deferral of unrealised capital gains and tax-free reserves are conditional on the transferred assets and liabilities remaining effectively connected with a PE of the receiving company in the Member State of the transferring company. At the same time, the receiving company continues to apply the previous tax values and the previous depreciation method for the assets and liabilities involved.[870] At the level of the shareholders, the roll over relief is dependent on the shares received being valuated for tax purposes at the same (not higher) value than the ones they had in the respective (transferred or acquired) companies.

12.2.3 The Interest & Royalty Directive

On June 2003 and motivated by the desire to combat harmful tax competition aas well as to reduce distortion of the internal market the Council of Ministers adopted the Interest and Royalty Directive.[871]

---

[867] See preamble to Council Directive 90/434/EC of 23 July 1990, OJ L 225, 20 August 1990.
[868] See preamble to Council Directive 90/434/EC of 23 July 1990, OJ L 225, 20 August 1990.
[869] See Article 3 of Council Directive 90/434/EC of 23 July 1990, OJ L 225, 20 August 1990.
[870] See the Merger Directive, *supra*, Article 4(2)(b), 4(4) and 12(1).
[871] Council Directive 2003/49/EC of 3 June 2003, on a Common system of Taxation Applicable to Interest and Royalty Payments made between associated companies of different Member States, OJ L157, 26 June 2003.

The main objective of the Interest and Royalty Directive is to ensure that qualifying cross-border intra-EU interest and royalty transactions are not subject to less favourable tax treatment than that similar to purely domestic transactions, i.e. are subject to tax only once in the Member State where the recipient is considered to be a resident for tax purposes.[872] Article 1 of the Interest and Royalty Directive therefore prohibits any taxation on the interest and royalty transactions that come within its scope in the source Member State. The Interest and Royalty Directive is designed to eliminate withholding taxes on cross-border intra-EU interest and royalty transactions within a group of companies. That is achieved by requiring the source Member State to refrain from imposing withholding taxes on qualifying interest and royalty transactions whether by deduction at source or by assessment.[873] In addition, the Interest and Royalty Directive also aims to prevent cash-flow problems arising from the timing mismatch between the moment the withholding tax is levied and the deduction of the tax credit is granted.[874] Furthermore the Interest and Royalty Directive aims to prevent any additional administrative formalities relating to the deduction of or exemption from withholding taxes.[875] However, Member States may require taxpayers to comply with certain administrative formalities in order for them to be able to benefit from the exemption of withholding taxes in the source Member State. The source Member State has the right to require that the taxpayer, when making a request for an exemption from withholding taxes, provides the source Member State with an attestation certifying that the taxpayer meets all the requirements of the Interest and Royalty Directive. [876] Furthermore, the source Member State may make the exemption from withholding taxes conditional upon the source Member States issuing an administrative decision granting the exemption.[877] If the taxpayer, however, does not provide the source Member State with such attestation the source Member State has the right to deny the exemption from withholding taxes and tax the interest or royalty transaction subject to limitations provided for in relevant tax treaties.[878] The Interest and Royalty Directive is limited in scope.

In order for a cross-border intra-EU interest and royalty transactions to come under the scope of the Interest and Royalty Directive a company must satisfy the following requirements. First, Article 3(a)(i) requires that both companies have to take one of the legal forms listed in the Annex thereto. Second, Article 3(a)(ii) requires both companies

[872] See preamble to Council Directive 2003/49/EC of 3 June 2003, OJ L157, 26 June 2003.

[873] See Ben J.M. Terra and Peter J. Wattel, *European Tax Law*, Fiscale Handboeken 2nd edition Kluwer Detenver (2012), p. 759.

[874] See Dennis Webber, "The Proposed EC Interest and Royalty Directive", 9 *EC Tax Review* 1 (2000), p. 16.

[875] See See preamble to Council Directive 2003/49/EC of 3 June 2003, OJ L157, 26 June 2003.

[876] See Article 1(11) of Council Directive 2003/49/EC of 3 June 2003, on a Common system of Taxation Applicable to Interest and Royalty Payments made between associated companies of different Member States, OJ L157, 26 June 2003.

[877] See Article 1(12) of Council Directive 2003/49/EC of 3 June 2003, on a Common system of Taxation Applicable to Interest and Royalty Payments made between associated companies of different Member States, OJ L157, 26 June 2003.

[878] See Ben J.M. Terra and Peter J. Wattel, *European Tax Law*, Fiscale Handboeken 2 nd edition, Kluwer Detenver (2012), p. 393.

have to have their fiscal residence in a Member State. Third, both companies must be subject to one of the taxes listed in Article 3(a)(iii) or be subject to a tax that is identical or substantially similar. Fourth, Article 3(b) provides that the companies must be considered to be associated companies, that is, a holding of 25% in the capital is required.

12.3 The Commission proposals

12.3.1 Draft Directive on cross-border loss relief

On 24 January 1991, the Commission submitted a Proposal[879] for a Council Directive on cross-border loss relief concerning foreign PEs and subsidiaries.[880] The underlying premise of this proposal was to remove the obstacles to the internal market arising from the inability to deduct the losses incurred by PEs and subsidiaries situated in Member States other than the one in which the company in question was resident for tax purposes. Therefore the Proposal set forth[881] "[…] *arrangements enabling enterprises to take account of the losses incurred by permanent establishments or subsidiaries situated in other Member States.*"
The main conditions for the application of the Draft Directive were that companies or PEs were subject to, without being exempt from, one of the listed taxes in Article 3 of the Draft Directive. In order to qualify for the application of the Draft Directive, a direct participation of at least 75% was required, although with an option for Member States to set a lower threshold.[882] Member States were also given the option to extend the cross-border loss relief to PEs or subsidiaries located in third States.[883]

Specifically regarding the cross-border loss relief, the Draft Directive provided for the following methods:

(i) In the *case of PEs,* the option[884] to apply either the credit method or the deduction with recapture rule. Under the credit method,[885] the positive or negative results of

[879] See Commission of the European Communities, *Proposal for a Council Directive concerning arrangements for the taking into account by enterprises of the losses of their permanent establishments and subsidiaries situated in other Member States*, COM(90) final, 24 January 1991 (hereinafter also referred to as "Draft Directive on Cross-Border Loss Relief").
[880] In 1984, the Commission had already submitted a proposal for a directive on the carry-over of losses. This proposal was intended to harmonize the domestic legislation of Member States regarding the carry-over of losses. See Commission *Proposal for a Council Directive on the harmonization of the laws of the Member States relating to tax arrangements for the carry-over of losses of undertakings*, CIN(84) 404 final of 11 September 1984, later amended by *Amendments to the Proposal for a Council Directive on the harmonization of the laws of the Member States relating to tax arrangements for the carry-over of losses of undertakings*, (COM985) 319 final. This Proposal provided for a three-year carry back and unlimited carry forward of losses in the domestic laws of Member States. The Proposal was withdrawn in 1996, based on the fact that domestic loss relief arrangements based on the principle of subsidiarity as the Commission considered that the domestic loss compensation arrangements fall under the institutional sphere of competence of Member States.
[881] See Article 1 of the Draft Directive on Cross-Border Loss Relief.
[882] See Article 2 of the Draft Directive on Cross-Border Loss Relief.
[883] See Article 4 of the Draft Directive on Cross-Border Loss Relief.
[884] See Article 5 of the Draft Directive on Cross-Border Loss Relief.

the PE were included in the overall results of the head office with a credit being granted for taxes paid by the PE. In the case of the deduction-recapture rule,[886] the losses incurred by the PE in a certain tax year would be deducted against the profits of the head office obtained in the same tax year; subsequent profits of the foreign PE would be incorporated in the head office overall income to the extent of the previously deducted losses;

(ii) In the *case of foreign subsidiaries* only the application of the deduction-recapture rule was provided, in similar terms as referred to above.

In order to be considered as a qualifying subsidiary for cross-border loss relief, the Draft Directive provided for a threshold of 75% ownership[887] giving it a majority of voting rights being limited to direct shareholdings. This threshold was considered appropriate, not only to ensure equal treatment between subsidiaries and PEs but also, at the same time, allowing a significant use of the cross-border relief system.

Interestingly, the Draft Directive was limited to upstream loss compensation, therefore, limiting the situations in which cross-border loss relief was allowed. For instance, if the parent company was loss-making, those losses could not be offset against the profits of other company members of the group.

The Draft Directive also provided for an option for Member States to introduce automatic recapture of the losses in specific circumstances. In particular, if there had been no recapture of the losses within a period of five years of the loss becoming deductible, if the subsidiary was sold, wound up or transformed into a PE, or if the holding in the capital of the subsidiary had fallen below the minimum level, there was the possibility of automatic recapture. In practice, this means that the budgetary impact of the cross-border loss relief was merely temporary, unless the Member States had opted out of the mechanism of automatic recapture.

As regards the calculation of the losses, the Draft Directive followed the rules of the legislation of the Member State where they were incurred, that is, the Member State where the subsidiary or the PE were situated.[888] Later, the Commission would shift its view[889] regard by considering that the rules to be applied should rather be the ones of the Member State of the company taking the foreign losses.

---

[885] See Article 6 of the Draft Directive on Cross-Border Loss Relief.
[886] See Article 7 of the Draft Directive on Cross-Border Loss Relief.
[887] See Article 7 of the Draft Directive on Cross-Border Loss Relief.
[888] See Articles 7 (2) and 9 (2) of the Draft Directive on Cross-Border Loss Relief.
[889] See Commission of the European Communities *Staff Working Paper Company Taxation for the Internal Market*, COM(2001) 582 final, 23 October 2001, p. 338. According to the Commission, it should not be overlooked that computing the losses under the rules of the country in which they occur could open tax planning opportunities as multinational groups would try to ensure that expenses were always incurred in a jurisdiction in which they were deductible.

12.3.2 The CCCTB

One of the more ambitious projects of harmonization in the field of direct taxation is the proposal[890] submitted by the Commission for a Directive for a Common Consolidated Corporate Tax Base ("CCCTB"). The CCCTB is a system of common rules for computing the tax base of companies which are tax resident in the EU and of EU-located branches of third-country companies. The aim of the CCCTB is to remove existing tax obstacles to cross-border activities as the interaction of national tax systems often leads to over-taxation and double taxation, and to the fact that economic operators have to face heavy administrative burdens and high tax compliance cost in the absence of such a set of common rules.

The elements of the CCCTB proposal are revealed by its designation: a *Common*, *Corporate*, *Consolidated*, *Tax Base*: the common fiscal framework provides for rules to compute the individual tax results of each company tax resident in the EU and of EU-located branches of third-country companies or branch), the consolidation of those results, when there are other group members, and the apportionment of the consolidated tax base to each eligible Member State.

As regards the first element of a *common* tax base, the CCCTB provisions provide rules for the calculation of the tax base. Those rules follow the general principles of corporate taxation rules of the Member States, such as the realization principle and the consistency requirement, although they are not aligned with the rules of any particular Member State.[891] The approach followed is the traditional Anglo-Saxon approach of profit and loss account calculation rather than the continental European balance sheet tradition.[892]

Nevertheless, the CCCTB is not intended to replace the existing set of corporate tax rules of Member States. Therefore, the proposal provides only for the harmonization of the tax bases, as each Member State will keep applying its own tax rates to the income apportioned to them pursuant the CCCTB rules, which determine the amount of the consolidated tax base that belongs to each Member State. In the case a taxpayer elects to apply the common base, it is obliged to form a CCCTB group with its qualifying subsidiaries. Therefore, grouping itself is mandatory and includes all qualifying entities.

---

[890] See *Proposal for a Council Directive on a Common Consolidated Corporate Tax Base (CCCTB)*, COM (2011) 121/4. This proposal was subject to several proposed changes by the European Parliament in accordance with its legislative resolution of 19 April 2012 PROV (2012) 0135. Therefore, at a later date, on 24 November 2014, the Commission submitted a compromise proposal on a CCCTB Directive which included some amendments notably addressing concerns of base erosion and tax evasion. See *Proposal on a Common Consolidated Corporate Tax Base no. 15756/14* available in *H&I*, 2015/3.91 (with comments by Shuchien Chen).

[891] See Art. 9 of the Proposal for a Council Directive on a CCCTB.

[892] See Art. 10 of the Proposal for a Council Directive on a CCCTB.

Probably the most relevant and ambitious feature of the CCCTB is the possibility of cross-border *consolidation*. Eligibility for consolidation (group membership) would be determined in accordance with a two-part test[893] based on (i) control (more than 50% of voting rights),[894] and (ii) ownership (more than 75% of equity) or rights to profits (more than 75% of rights giving entitlement to profit). These two thresholds should be met throughout the tax year or otherwise, the company should leave the group immediately. An additional requirement is that this test also requires a minimum period of nine months in order to entitle group membership. Otherwise, the taxpayer would be considered never to have been part of the group.

As a consequence of the consolidation, there is a pooling of the tax bases of qualifying subsidiaries as well as PEs of such subsidiaries where profits and losses are offset amongst the group company members, regardless of their Member State of residence or establishment. Therefore, group relief is available for all group members. In the case of losses incurred by a company prior to entering a CCCTB group, those losses are not taken into account for consolidation. Those losses may, however, be offset against the share of future profits attributed to that company following domestic rules on loss carry forward. Once a company is part of the consolidated group, any future losses incurred are locked in. As a result, when consolidation leads to an overall loss result of the group, this loss is carried forward only at group level and set off against future consolidated profits of that group, that is, before the profits are allocated. In addition, CCCTB losses are eligible for carry forward indefinitely with no possibility of carry-back. In addition, the lock in effect also means that when a company leaves the group, the losses remain in the group and are not attributed to the exiting company.[895] Only upon the group termination are unrelieved losses attributed to the group members at the moment of termination.

Another important benefit arising from cross-border consolidation is the elimination of intra-group transactions for companies participating in the CCCTB group.[896] As regards such transactions, both parties to the transaction must naturally be group members at the

[893] See Art. 54 as well as para. 16 of the Preamble of the Proposal for a Council Directive on a CCCTB. The entitlement to profit and ownership of capital is calculated by multiplying the interests held in intermediate subsidiaries at each tier. Ownership rights amounting to 75% or less held directly or indirectly by the parent company including rights in companies resident in a third country, will also be taken into account in the calculation.

[894] In all events and as stated in Art. 54 (2) (a) of the Proposal for a Council Directive on a CCTB, once the voting right threshold is reached in respect of immediate and lower tier subsidiaries, the parent company shall be deemed to hold 100% of such right.

[895] See Arts. 65, 66 and 69 of the Proposal for a Council Directive on a CCCTB. A distinction should be made between a company leaving the group but remaining under the CCCTB framework, and a company leaving the CCCTB altogether. Only in this latter case, will the losses be carried forward and set off according to the respective national legislation.

[896] See Art. 59 (1) of the Proposal for a Council Directive on a CCCTB.

time of the transactions and no revenues or expenses will be recognized.[897] In addition, no withholding taxes or other source taxation will be charged on transactions between members of the group.[898] As a consequence of eliminating intra-group transactions, transfer pricing issues are removed with considerable savings in terms of compliance costs as there is no need to maintain the underlying documentation.

The third element of the CCCTB is the *corporate* tax base. In fact, the scope of the Directive is to apply to companies and groups of companies, which are established in a Member State in accordance with a qualifying legal form (listed in Annex I to the Directive) and subject to a qualifying tax on profits[899] (listed in Annex II to the Directive). The Directive is also applicable to PEs located in a Member State as well as to companies established in a third country when the company has both a similar form and is subject to one of the corporate taxes listed in Annexes I and II, respectively, of the Directive.

The consolidation of the group's taxable base requires a mechanism for the allocation of such *tax base* to each particular group member and Member State concerned. The formula for apportioning the consolidated tax base is based on three equally weighted factors (labour, assets and sales). The labour factor is computed on the basis of payroll and the number of employees (each item counting for half). The asset factor consists of all fixed tangible assets. Intangibles and financial assets would be excluded from the formula due to their mobile nature and the risks of circumventing the system. As regards the sales factor,[900] this is determined based on sales by destination. It is determined by comparing the value of the total sales attributed to a given entity with the value of the total sales attributable to the entire group.
The use of these factors gives appropriate weight to the interests of the Member State of origin. Those factors and weightings are aimed at ensuring that profits are taxed where they are earned. The proposal contains an exception to the general principle with a safeguard clause providing for an alternative method, when the outcome of the apportionment does not fairly represent the extent of business activity.

As an ambitious project, the CCCTB was subject to a number of objections. One of the criticisms is that the objective of consolidation is too far-reaching and that the focus should be – at least at a first stage – on a CCTB, that is, a common corporate tax base. The fact is that the mechanism of consolidation and, in particular, the pooling of the tax bases has an immediate impact on revenues of each Member State. In addition, not only the size of the taxable base but also the related mechanism of distribution of corporate tax bases is naturally subject to discussion regarding the factors that should be considered in the apportionment formula.

[897] See Art. 59 (2) of the Proposal for a Council Directive on a CCCTB.
[898] See Art. 60 of the Proposal for a Council Directive on a CCCTB.
[899] See Arts. 1-2 of the Proposal for a Council Directive on a CCCTB.
[900] See Arts. 95-96 of the Proposal for a Council Directive on a CCCTB.

Another major source of concern has been expressed regarding the optional character of the regime.[901] According to the Commission and following the economic results of its Impact Assessment, the optional character of the CCCTB is preferable for two main reasons:[902] (i) the estimated impact on employment is more favourable, and (ii) the enforced change by every simple company in the EU to a new method of calculating its tax base is avoided. However, the optional character of the CCCTB raises issues for both taxpayers and tax administrations. From the perspective of taxpayers, in the case of multinationals which have CCCTB and non-CCCTB group companies, this means the need to deal with the tax systems and the consequent double burden in terms of compliance. Similarly, for tax administrations, the co-existence of national rules and the CCCTB means increased costs in running two different systems. Irrespective of the soundness of the Commission Impact Assessment, the fact is that the elective nature of the CCCTB appears to be driven more by policy reasons than strictly from an economic and practical analysis. Subsequently, the Commission changed its views, recognizing that the optional character of the CCCTB may limit its effectiveness to address tax avoidance as multinational enterprises may opt not to be in the CCCTB. Therefore, a mandatory CCCTB may be expected, at least as regards multinational enterprises.[903]

12.4 Interim conclusions

The current status of EU corporate income tax law harmonization is still relatively scarce. Despite the importance of the current existing Directives with impact on groups of companies, they have not been able to eliminate the underlying existing problems. In addition, the most ambitious proposals of the Commission, first in the field of cross-border loss relief and more recently on a CCCTB, have not been approved and it is unlikely that such approval will be given in the short-term.

Therefore, and in the meantime, Courts have been forced to deal with a large number of challenges by groups to national regimes that they consider to be discriminatory. In particular, the CJ has been called on to rule on several cases with an impact on groups of companies in order to try to fix some of the situations which the EU legislature has, so far, been unable to materialize in legislation. The absence of such legislative framework has obviously jeopardized harmonization and the possibility to have a cross-border group consolidation at EU level. In the meantime, the CJ has pursued its role of negative harmonization, relying on the interpretation of the fundamental freedoms to scrutinize the extent to which the existing national group taxation regimes comply with the TFEU.

[901] The optional character of the CCCTB is reflected in Article 6 of the Proposal for a Council Directive on a CCCTB with the reference in both paras. 1 and 2 of this Article to the possibility of both Member State residents as well as third country PEs *may opt* for the system provided in the CCCTB Directive.
[902] See Proposal for a Council Directive on a CCCTB, p. 8.
[903] See Communication from the Commission to the European Parliament and the Council: *A Fair and Efficient Corporate Tax System in the European Union: 5 Key Areas for Action*, COM (2015) 302 final, of 17 June 2015.

Chapter 13

General Considerations on the Interpretation of the Fundamental Freedoms

13.1 Introduction

The TFEU provides five freedoms, namely, the right to the free movement of goods, the free movement of workers, the freedom of establishment, the freedom to provide services and the free movement of capital. The freedoms have direct effect of national laws and, in that sense, they are transformed into individual rights of taxpayers.[904]

In principle,[905]the general free movement provisions of the TFEU apply in similar terms to Member State's tax rules as it applies to non-tax rules. Direct tax cases may raise issues on any of the free movement provisions.

The CJ has taken an increasingly active role over the years in giving direct effect to the provisions of the TFEU on the fundamental freedoms in the field of direct taxation. The CJ relies primarily on the fundamental freedoms provided in the TFEU and scrutinizes national tax systems as regards their compatibility with such EU primary law.

Its case law has been aimed at achieving negative integration through enforcing the TFEU fundamental freedoms as a limit on Member States' sovereignty in tax matters. Undisputedly, the interpretation made by the CJ in direct tax cases has led to substantial changes in domestic tax legislation, the reason by which more often than not the CJ has in a negative way, been criticised as performing "judicial activism". The fact is that Court's case law on the application of the fundamental freedoms to domestic direct tax rules has been considered[906] as one of the most controversial, challenging and fascinating areas of competence in the field of EU law, being sometimes subject to criticism for not being sufficiently clear.

---

[904] See inter alia, Francis G. Jacobs, "The Evolution of the European Legal Order", 41 *Common Market Law Review* 2, p. 308.

[905] See *infra* 13.4.

[906] See, inter alia, Peter J. Wattel, "Red Herrings in Direct Tax Cases before the ECJ, 31 *Legal Issues of Economic Integration* 2 (2004), pp. 81-82, Suzanne Kingston "A Light in the Darkness: Recent Developments in the ECJ's Direct Tax Jurisprudence", *Common Market Law Review* 44 (2007), p. 1321 or Tom O'Shea, "European Tax Controversies: A British-Dutch Debate: Back to Basics and Is the ECJ Consistent?", *World Tax Journal* 2 IBFD, (2013), p. 100.

13.2 National powers in direct taxation and their limits under the fundamental freedoms

In addressing direct taxation issues, the CJ typically starts by referring to the fact that:

> "Although the Community law stands at present, direct taxation does not as such fall within the preview of the Community, the powers retained by the Member State must nevertheless be exercised consistently with Community law."

The statement quoted above, which virtually heads all of the Court's findings in the case law on direct-tax matters,[907] represents the current state of affairs on the division of competences between the EU and the Member States on the subject.
The Court[908] further developed this statement by stating that:

> "[…] in the current state of development of Community law, the Member States enjoy a certain autonomy in this area provided they comply with Community law, and are not obliged therefore to adapt their own tax systems to the different systems of tax of the other Member States in order, *inter alia*, to eliminate the double taxation arising from the exercise in parallel by those Member States of their fiscal sovereignty […]."

This means that Member States do not have any obligation to harmonize in the field of direct taxation. It is also clear from the above statement that the CJ draws a line between the power to tax, which is an exclusive matter for Member States, and the manner in which Member States choose to exercise their powers which is a matter that falls within the EU competences.

---

[907] See, *inter alia*, cases ECJ 14 February 1995, C-279/93 *Finanzamt Koln-Altstadt v Roland Schumacker*, para. 21; ECJ 11 August 1995, C-80/94 *G.H.E.J. Wielockx v Inspecteur der Directe Belastingen*, para. 16; ECJ 27 June 1996, C-107/94 *P.H. Asscher v Staatssecretaris van Financien*, para. 36; ECJ 14 September 1999, C-391/97 *Frans Gschwind v Finanzamt Aachen-Aussenstadt*, para. 20; ECJ 6 June 2000, C-35/98 *Staatssecretaris van Financien v B.G.M. Verkooijen*, para. 32; ECJ 3 October 2002, C-136/00, *Rolf Dieter Danner*, para. 28; ECJ 11 December 2003, C-364/01 *The heirs of H. Barbier v Inspecteur van de Belastingdients Particulieren/Ondernemingen buitenland te Heerlen*, para. 56; ECJ 15 July 2004, C-315/02 *Anneliese Lenz v Finanzlandesdirecktion fur Tirol*, para. 19; ECJ 7 September 2004, C-319/02 *Petri Manninen*, para. 19; ECJ 10 March 2005, C-39/04, *Laboratoires Fournier SA v Direction des vérifications nationales et internationales*, para. 14; ECJ 19 January 2006, C-265/04 *Margaretha Bouanich v Skattverket*, para. 28; ECJ 3 October 2006, C-290/04 FKP *Scorpio Konzertproduktionen GmbH v Finanzamt Hamburg-Eimsbuttel*, para. 30; ECJ 14 December 2006, C-170/05 *Denkavit Internationaal BV, Denkavit France SARL v Ministre de l"Économie, des Finances et de l"Industrie*, para. 19; ECJ 15 February 2007, C-345/07 *Centro Equestre da Lezíria Grande Lda. v Bundesamt fur Finanzen*, para. 19; ECJ 8 November 2007, C-379/05 *Amurta SGPS v Inspecteur van de Belastingdienst/Amsterdam*, para. 16; ECJ 18 June 2009, C-303/07 *Aberdeen Property Fininvest Alpha Oy*, para. 24; ECJ 19 November 2009, C-540/07 *Commission of the European Communities v Italian Republic*, para. 28; ECJ 3 June 2010, C-487/08 *European Commission v Kingdom of Spain*, para. 34; and CJ 1 July 2010, C-233/09, *Gerhard Dijkman, Maria Dijkman-Lavaleije v Belgische Staat*, para. 20.

[908] See, *inter alia,* cases ECJ 6 December 2007, C-298/05 *Columbus Container Services BVBA & Co. v. Finanzamt Bielefeld-Innenstadt*, para. 51; and ECJ 12 February 2009, C-67/08, *Margarete Block v. Finanzamt Kaufbeuren,* para. 31.

Thus, direct taxation is, in principle, an area of Member States competence. In accordance, Member States are free to determine the factors by which they define their tax jurisdiction.[909] This implies the definition of what criteria should trigger tax jurisdiction (residence, source), who should or should not be subject to tax, the tax base, tax rate, etcetera, which are no more that the consequence that Member States retain fiscal sovereignty in the direct taxation. As observed by AG Geelhoed:[910]

> "[…] Under Community law, the power to choose criteria of, and allocate, tax jurisdiction lies purely with Member States (as governed by international tax law). At present, there are no alternative criteria to be found in Community law, and no basis for laying down any such criteria. The Court has recognised this on a number of occasions […]."

However, when exercising that tax jurisdiction, Member States cannot, in principle, tax non-residents more onerously than residents.

Member States are then free to choose the manner of how to organise their tax system as long as this system is applied in a non-discriminatory manner to domestic and cross-border situations. More clearly: the issue is then how a Member State exercises its taxing powers and not whether or not it chooses to do so. If a Member State refrains from exercising its taxing power, by not taxing at all or by drawing the boundaries of its taxing jurisdiction at a particular point, the EU acquires no competence to act. The EU cannot itself create a competence to act in direct tax matters by requiring that a Member State exercise its taxing power in a particular respect when it has chosen not to do so. This would shift the EU's competence in taxation from negative to positive harmonisation.[911] Negative integration means that the CJ can only rule on the compatibility of particular tax provisions with the fundamental freedoms. This means that the CJ only has competence to strike down domestic tax provisions[912] and not to build up a harmonized European-wide tax system.[913] This means that, only once a Member State has exercised its taxing power is the EU's

---

[909] See D. Weber, "In Search of a (New) Equilibrium between Tax Sovereignty and the Freedom of Movement within the EC", 34 *Intertax* 12 (2006), p. 586, and Ben Terra & Peter Wattel, *European Tax Law*, Fiscale Handboeken 2nd edition, Kluwer Deventer (2012), p. 882.

[910] See Opinion of AG Geelhoed delivered on 23 February 2006 in case C-374/04 *Test Claimants in Class IV of the ACT Group Litigation*, para. 52 and Opinion delivered on 29 June 2006 in case C-524/04 *Test Claimants in the Thin Cap Group Litigation*, para. 53.

[911] See Michael Lang "Double Taxation and EC Law" in Reuven S. Avi-Yonah, James R. Hines Jr. and Michael Lang (eds.) *Comparative Fiscal Federalis: Comparing the European Court of Justice and the US Supreme Court's Tax Jurisprudence*, EUCOTAX Series on European Taxation Vol. 14, Kluwer Law International (2007), p. 12.

[912] According to Lang, the fact that the Court goes beyond its limits may be due to the fact that, in his view, there is no conceptual difference between the allocation of taxing powers on one hand, and the exercise of taxing rights in the other. See Michael Lang id., at 36.

[913] Somewhat in the same sense, Vanistendael refers to the fact that the distinction between rules regarding allocation of tax jurisdiction and exercise of tax jurisdiction is not easy to make. See Frans Vanistendael "In defence of the European Court of Justice", *Bulletin for International Taxation* 3 IBFD (2008), p. 97.

competence engaged.[914] Thus, the allocation of tax competence prevails (necessarily) over the exercise of such competence.[915]

As a consequence of the existing non-harmonized tax systems, possible disparities or variations may exist between those jurisdictions which may lead to distorting effects on investment.[916] For instance, one of the disadvantages of the fact that EU Member States retain their fiscal sovereignty in the field of direct taxation is that the income of a parent company and its subsidiaries is split over the various jurisdictions, which means that, in principle, the respective profits and losses cannot be offset against each other.[917] However those disadvantages arise precisely due to the interaction of tax systems and that is perfectly compatible with EU law. In other words, obstacles arising from the differences in national tax systems or from the way Member States have divided their tax jurisdiction constitute disparities and consequently, do not fall within the scope of the fundamental freedoms but can only be tackled by positive harmonization.

Following a different approach means that the CJ is incorrectly considering that there is a *prima facie* breach of the fundamental freedoms, which is so prohibited unless justified. As a consequence, this distorts the division of powers in the EU as it places the burden on Member States which have to prove a justification, where traditionally, the Court's approach to justifications is quite narrow. And it is conceptually incorrect[918] as Member States have to justify rules which come within the core of their tax sovereignty and thus do not fall within the scope of the EU fundamental freedoms.

Therefore, disparities are a consequence of the parallel exercise of fiscal sovereignty of Member States and therefore, none of the Member States is forced to adapt their own systems to remove those disadvantages. That only occurs if an obstacle to the fundamental freedoms is created by the legislation of one Member State.[919] From a conceptual perspective, it is submitted that the CJ's incorrect approach to cases involving cross-border group relief arises from the fact that in applying its free movement reasoning, the Court does not properly take into account the particularities of direct tax law, and by adopting an

---

[914] See Malcolm Gammie, "The compatibility of national tax principles with the single market", in Frans Vanistendael (ed.), *EU Freedoms and Taxation*, EATLP International Tax Series, Vol. 2, IBFD (2006), p. 111.

[915] See Melchior Wathelet, "The Influence of Free Movement of Persons, Services and Capital on National Direct Taxation: Trends in the Case Law of the Court of Justice", *Yearbook of European Law*, (2001), p. 3.

[916] See Sjoerd Douma, *Optimization of Tax Sovereignty and Free Movement*, IBFD Doctoral Series no. 21 (2011), p. 14.

[917] See O. Marres, "The Principle of Territoriality and Cross-Border Loss Compensation", 39 *Intertax* 3, Kluwer Law International BV (2011), p. 112.

[918] See Suzanne Kingston, "The Boundaries of Sovereignty: The ECJ's Controversial Role Applying Internal Market Law to Direct Tax Measures", *Cambridge Yearbook of European Legal Studies* 9 (2007), p. 300.

[919] See D. Weber, "In Search of a (New) Equilibrium between Tax Sovereignty and the Freedom of Movement within the EC", 34 *Intertax* 12 (2006), p. 588.

improper internal market or overall approach. In that regard, the Court goes beyond its competences and does not show proper respect for Member States' direct tax sovereignty.

13.3 Per-country *vs* overall approach

Traditionally, the analysis of the compatibility of tax provisions with EU law has been scrutinized from the perspective of one single Member State, whereas the treatment in the other Member State is irrelevant.[920] Two taxpayers are deemed to be in a comparable situation if they have a common connection to the tax system of one Member State and, in accordance, forbidden discrimination may arise only if two comparable situations are caused by one and the same Member State[921].

However, in a number of judgements the CJ has abandoned its unilateral approach[922] and has taken into account the effect of the taxation in one Member State when scrutinizing the tax treatment of the taxpayer in another Member State.[923] In a certain group of decisions – in the field of cross-border dividends distributions, - the CJ has considered that the discriminatory taxation in the source State could be neutralized by a tax privilege – a tax credit – granted in the residence State. For the sake of legal certainty and reflecting the agreed shift in the allocation of taxing rights between Member States, the CJ has only validated this neutralization theory[924] in the case the compensatory effects in the other State have been agreed in an international treaty between the Member States concerned. From this perspective the adoption of an overall approach leads to a cure of a *prima facie* breach

[920] See *inter alia*, Sandra Eden "The Obstacles faced by the European Court of Justice in removing the "obstacles" faced by the taxpayer: the difficult case of double taxation" *British Tax Review* 6 (2010), p. 620; Michael Lang, "ECJ case law on cross-border dividend taxation-recent developments," 17 *EC Tax Review* 2 Kluwer Law International BV (2008), p. 72; Axel Cordewener, "Foreign Losses, Tax Treaties and EC Fundamental Freedoms: A New German Case before the ECJ", 43 *European Taxation* 9, IBFD (2003), p. 300; and Gerald Toifl, "Can a discrimination in the state of residence be justified by the taxable situation in the state of source?", *EC Tax Review* 4 (1996), pp. 166-167.

[921] See Josef Schuch, "EC law requires multilateral tax treaty", *EC Tax Review* 1 (1998), p. 31.

[922] See cases ECJ 28 January 1986, C-270/83, *Commission v French Republic* ("Avoir Fiscal"); ECK 13 July 1993, C-330/91, *The Queen v Inland Revenue Commissioners, ex parte Commerzbank AG*; ECJ 14 September 1999, C-311/97, *Royal Bank of Scotland plc v Elliniko Dimosio (Greek State)*; ECJ 21 September 1999, C-307/97, *Compagnie de Saint-Gobain v Finanzamt Aachen-Innenstadt*; ECJ 8 March 2001, Joined Cases C-397/98 and C-410/98, *Metallgesellschaft Ltd and Others, Hoechst AG and Hoechst (UK) Ltd v Commissioners of Inland Revenue and HM Attorney General*.

[923] See Frans Vanistendael, "The ECJ at the Crossroads: Balancing Tax Sovereignty against the Imperatives of the Single Market", *European Taxation* 9 IBFD (2006), p. 413.

[924] See cases CJ 17 September 2015, Joined cases *J. B. G. T. Miljoen* (C-10/14), *X* (C-14/14) *and Société Générale S.A.* (C-17/14) *v Staatssecretaris van Financiën*; CJ 18 June 2012, Case C-38/11, *Amorim Energia BV v Ministério e da Administração Pública*; CJ 20 October 2011, Case C-284/09, *Commission v Federal Republic of Germany*; CJ 3 June 2010, Case C-487/08 *European Commission v Kingdom of Spain*; ECJ 19 November 2009, Case C-540/07 *Commission of the European Communities v Italian Republic*; ECJ 8 November 2007, Case C-374/05, *Amurta SGPS v Inspecteur van de Nelastingdienst/Amsterdam*.

to the fundamental freedoms. In another group of judgements[925], the existence of a breach of the freedoms is ultimately dependent of the tax treatment in another Member State. This is particularly the case of personal deductions and cross-border losses where the CJ developed a notion of contingent breach[926] as the breach in one Member State is ultimately dependent on the possibility to deduct costs/losses in another Member State.

The main argument is favour of an overall approach is that[927] a single country approach would be inconsistent with the aim of realizing the internal market. In the EU, an internal market should be identical to a domestic market of a single State. Therefore, the proper approach should involve taking into account not only the domestic tax law of a Member State but also any relevant tax treaties concluded with another Member State and the domestic tax law of that other State. A further argument is that the single country could lead to double or multiple advantages such as double exemptions or double deductions.

Also AG Geelhoed also pleaded for an overall approach[928] considering that:

> "[...] the combination of home state and source state obligations under the free movement provisions should properly be seen as a whole, or as achieving a type of equilibrium. Examination of the situation of an individual economic operator in the framework of just one of these States – without taking into account the Article 43 EC obligations of the other State – may give an unbalanced and misleading impression, and may fail to capture the economic reality in which that operator is acting."

I respectfully submit that the arguments in favour of an overall approach are not convincing as it makes the legal existence of an infringement in one Member State dependent on the legislation of the other Member State[929].

---

[925] See, *inter alia*, cases ECJ 14 February 1995, Case C-279/93, *Finanzamt Koln-Altstadt v Roland Schumacker*; ECJ 11 August 1995, Case C-80/94 *Wielockx v Staatssecretaris van Financiën*; ECJ 4 September 1999, Case C-391/97 *Gschwind v Finanzamt Aachen-Aussenstadt*; ECJ 12 December 2002, Case C-385/00, *F.W.L. de Groot v Staatssecretaris van Financiën*; ECJ 18 September 2003, Case C-168/01, *Bosal Holding BV v Staatssecretaris van Financien*; ECJ, 7 September 2004, Case C-319/02, *Petri Manninen*; ECJ 12 December 2005, *Marks & Spencer plc v David Halsey (Her Majesty's Inspector of Taxes)*.

[926] This term is used by Julian Ghosh in *Principles of Internal Market and Direct Taxation*, Key Haven Publication PLC (2007), p. 220.

[927] See Eric Kemmeren, "The Internal Market Approach Should Prevail over the Single Country Approach", in Luc Hinnekens & Philip Hinnekens (eds.) *A Vision of Taxes within and outside the European Borders Festschrift in Honor of Prof. Dr. Frans Vanistendael*, Kluwer Law International, The Hague, The Netherlands (2008), p. 562.

[928] See the Opinions of Advocate General Geelhoed delivered on 27 April 2006 in ECJ, 14 December 2006, Case C-170/05, *Denkavit Internationaal, BV, Denkavit France SARL v Ministre de l'Économie, des Finances et de l'Industrie*, para. 37; or delivered on 23 February 2006 in ECJ, 12 December 2006, Case C-374/04, *Test Claimants in Class IV of the ACT Group Litigation v Commissioners of Inland Revenue*, para. 72.

[929] See Wolfgang Schön, "Loosing Out at the Snooker Table: Cross-Border Loss Compensation for PE´s and the Fundamental Freedoms", in L. Hinnekens and P. Hinnekens (eds.) *A Vision Within and Outside the European Borders, Festschrift in honor of Frans Vanistendael* Kluwer Law International p. 819, or Julian Ghosh, *Principles of Internal Market and Direct Taxation*, Key Haven Publication PLC (2007), pp. 155 and 169.

For instance, the question on whether a Member State is obliged to take into account foreign losses is dependent on the existence of tax relief in another Member State. But conceptually the discrimination test involves a comparison of the treatment provided to two taxpayers by one single jurisdiction. Discrimination exists when one taxpayer is subject to a disadvantageous treatment by one and the same jurisdiction when compared to another taxpayer. In other words, the existence of discrimination analyses the legislation of one Member State and should therefore be made in isolation, irrespectively of the situation in the other Member State[930]. The discrimination test does not involve the treatment of the two taxpayers by two different jurisdictions. This means[931] that a Member State should only take into account the consequences of its own legal order and, as a consequence, be considered as providing discriminatory treatment only by virtue of its own jurisdiction. Finding a discrimination by one Member State should not be dependant on the tax regime of another Member State. The overall approach takes into account the effects of the interaction of the Member States legislations and it is objectionable for a variety of reasons:

(i) The CJ has systematically rejected the existence of a countervailing tax advantage as a cure of a breach of the fundamental freedoms. In this sense, the Court has rejected that the interaction of tax regimes and therefore that a Member State can justify a breach of the fundamental freedoms or as reason to why there is no breach at all based on the possible offset of other advantages in another Member State.[932]

(ii) Conversely, following an overall approach may, effectively, also lead to ignoring the disparities which exist between the interaction of national tax systems and which are admissible under EU law. This is the case of a contingent breach, (e.g. cross border losses) when the breach in one Member State is dependant on the tax treatment of the other Member State. But EU law does not involve removing any

[930] Similarly also G. Kofler who considers that a single State approach is usually followed. However Kofler agrees with the CJ reasoning in the case of a "treaty-based overall approach" which allows for a neutralization of discriminatory withholding tax in the source State through a treaty-based tax credit in the taxpayer's residence State. See G. Kofler, "Tax Treaty "Neutralization" of Source State Discrimination under the EU Fundamental Freedoms?" *Bulletin for International Taxation* 12 IBFD (2011), pp. 684-690. It is submitted that also a single country approach should be followed irrespective of an eventual neutralization in tax treaties or not. The same arguments referred to above are entirely applicable. In fact, a discriminatory taxation imposed by the source State should be neutralized by that State and a tax treaty credit cannot be compared to a situation where there is no withholding tax at all. In the same sense, van Thiel argues that the single country approach is dogmatically correct but considers that the "post-discrimination analysis correction possibility (as per reference to the neutralization of the discrimination) is balanced. See similarly Servaas van Thiel, "The Direct Income Tax Case Law of the European Court of Justice: Past Trends and Future Developments, 62 *Tax Law Review* 1, New York (2008), p. 185.

[931] See Joachim Englisch, "Fiscal Cohesion in the Taxation of Cross-Border Dividends (Part Two), *European Taxation* 8, IBFD (2004), pp. 358-359.

[932] See cases ECJ 28 January 1986, C-270/83 *Commission v French Republic* ("Avoir Fiscal"), para. 21; ECJ 26 October 1999, C-294/97 *Eurowings Luftverkhers AG v Finanzamt Dortmund-Unna*, paras. 44-45; ECJ 21 September 1999, C-307/97 *Compagnie de Saint-Gobain v Finanzamt Aachen-Innenstadt*, para. 54; ECJ 6 June 2000, C-35/98 *Staatssecretaris van Financiën v B.G.M. Verkooijen,* , para. 61; ECJ 12 December 2002, C-385/00 *F.W.L. de Groot v Staatssecretaris van Financiën*, para. 97.

disparities between different tax systems nor that Member States frame their national legislation in accordance with the rules of other Member States[933].

(iii) It goes against the principle of legal certainty[934] as the existence of an unjustified discrimination becomes dependent not on the treatment given by a particular Member State but rather by the legislation of the other Member State. As a consequence it leads to situations where a discriminatory treatment appears and disappears in one Member State depending on the tax regime (or any amendments to such regime) in another Member State. This problem has been properly remarked on by AG Mengozzi in his Opinion[935] in the *Amurta* case when stating that:

> "In my opinion, it cannot be held that, in a case such as that before the Court, the discriminatory effects of national legislation on a taxpayer can be neutralised by benefits granted to him under the legislation of another Member State. To accept the contrary would, in essence, be tantamount to allowing a Member State to avoid its obligations under Community law by making compliance dependent on the possible effects of the national legislation of another Member State, which may be amended unilaterally at any time by that State. In such a situation there would be no legal certainty that a Member State would comply with the prohibition on arbitrary discrimination laid down in Articles 56 EC and 58 EC."

(iv) The adoption of an overall approach required the Court to accept new justifications, in particular the balanced allocation of the powers to tax, precisely to take into account the interaction of two tax systems of two Member States. The scope of this justification is often unclear and its meaning blurred by other justifications previously accepted by the CJ.[936]

Naturally adopting a per-country approach leads to possible situations of double taxation or double non-taxation. But that is the consequence of the absence of harmonized tax systems in which it is not up to the Court to avoid results that lead to either double non-taxation or double taxation. For instance, by requiring that deductions occur only once the Court effectively changes the principle of non-discrimination – which prohibits no less favourable treatment between domestic and cross-border situations – to an effective principle of equal treatment between domestic and cross-border situations that go beyond the scope of the interpretation of the fundamental freedoms. As referred to by Schön [937], the goal of neutrality intrinsic to the internal market is not absolute: it addresses abolishing discriminatory obstacles created by individual Member States irrespectively of the legislation of another Member State or whether the interaction of legislations leads to

---

[933] See Wolfgang Schön, "Neutrality and Territoriality – Competing or Converging Concepts in European Tax Law?" 69 *Bulletin for International Taxation* 4/5 (2015), p. 274.

[934] See EFTA Court, 23 November 2004, Case E-1/04, *Fokus Bank ASA v The Norwegian State, represented by Skattedirektoratet (The Directorate of Taxes)*, para. 37.

[935] See Opinion of AG Mengozzi delivered on 7 June 2007 in case C-379/05, *Amurta SGPS v Inspecteur van de Belastingdienst*, para. 78.

[936] See *infra* 16.2.4 for a further analysis on the meaning of the justification based on the balanced allocation of the powers to tax between Member States and its interaction with other justifications.

[937] See Wolfgang Schön, "Neutrality and Territoriality – Competing or Converging Concepts in European Tax Law?", 69 *Bulletin for International Taxation* 4/5 (2015), p. 271.

double taxation or doube deductions. Therefore, discriminatory legislation should be analysed only from the perspective of the respective Member State legal order disregarding an aggregate perspective.

If, as a result of the CJ judgments based on such approach lead to unintended taxation results – double taxation or double non-taxation -, that may have a positive outcome if it increases the pressure on the EU legislature or Member States to achieve some sort of coordination in their respective Member States. That outcome is more preferable, in my view, than the alternative of following an overall approach which may lead to a situation where the CJ itself is replacing the role of the legislator[938] and going beyond its competences, eroding Member States' sovereignty.[939] Furthermore, the CJ approach that makes the compatibility of national legislation with the TFEU dependent on the tax rules of other Member State creates an additional source of uncertainty and arbitrariness[940].

13.4 Restrictions *vs* discriminations in the field of direct taxation

The obligation to comply with the purpose of the fundamental freedoms involves, in principle, the prohibition to adopt measures which amount to a breach of those freedoms. Traditionally, the interpretation performed by the CJ made a distinction between whether a particular national provision that breached the freedoms constituted a restriction or a discrimination. There is a conceptual distinction between these two types of prohibited measures.[941]

Discriminations arise from measures which provide different treatment for persons who are objectively in comparable situations or that apply the same treatment[942] to different situations.[943] In this sense, the concept of non-discrimination is a relative concept in the

[938] See Michael Lang, "ECJ case law on cross-border dividend taxation-recent developments," 17 *EC Tax Review* 2 (2008), Kluwer Law International BV, p. 72.
[939] See Dennis Weber, "In Search of a (new) equilibrium between tax sovereignty and the freedom of movement within the EC", 34 *Intertax* 12 (2006), Kluwer Law International BV, p. 587.
[940] See Wolfgang Schön, "Neutrality and Territoriality – Competing or Converging Concepts in European Tax Law?", 69 *Bulletin for International Taxation* 4/5 (2015), p. 278.
[941] See Melchior Wathelet, "The Influence of Free Movement of Persons, Services and Capital on National Direct Taxation: Trends in the Case Law of the Court of Justice", *Yearbook of European Law* (2001), pp. 5-6.
[942] Weber prefers to use the term "generalization" when referring to different situations treated in the same way. According to Weber, the term "discrimination" denotes a difference in treatment, a distinction, which is something that does not occur in situations which although objectively different are subject to similar treatment. In that regard he considers that "prohibited generalisation" is a term that indicates better what is at issue. See D. Weber *Tax Avoidance and the EC Treaty Freedoms – A Study of the Limitations under European Law to the Prevention of Tax Avoidance*, EUCOTAX Series Vol. 11 Kluwer Law International 2005, p. 98.
[943] See cases ECJ 14 February 1995, C-279/93 *Finanzamt Koln-Altstadt v Roland Schumacker*, para. 27; ECJ 14 September 1999, C-311/97 *Gschwind v Finanzamt Aachen-Aussenstadt*, para. 21; ECJ 29 April 1999, C-311/97 *Royal Bank of Scotland*, para. 26; ECJ 12 September 2002, C-431/01 *Philippe Mertens v Belgian State*, para. 32; ECJ 14 November 2006, C-513/04 *Mark Kerckhaert and Bernadette Morres v Belgische*

sense that it requires a *tertium comparationis* or a benchmark[944] with which to compare the alleged discriminatory treatment.

Typically, it is possible to make a classification between *direct* or *overt discrimination* and *indirect* or *covert discrimination*. Direct discrimination refers to national measures which are directly targeted based on the nationality of the persons concerned. Indirect or covert discrimination refers to measures which draw no distinction based on nationality and thus, apply formally, without distinction to all EU citizens but, in reality, even if based on other distinguishing criteria, such as residence or possession of a qualification, the national measures concerned affect primarily nationals of other Member States. In other words, the cases of indirect discrimination refer to situations in which there is a distinction in treatment based on a criterion which is different from the prohibited one but which, nevertheless in fact, leads to the same result. In this sense, the concept of indirect discrimination must be established in light of factual circumstances as it focuses on the potential effect on the free movement.

In the *Sotgiu*[945] case, the Court had the opportunity to hold that:

> "The rules regarding equality of treatment […] forbid not only overt discrimination by reason of nationality but all covert forms of discrimination which, by application of other criteria of differentiation, lead in fact to the same result."

In the field of direct taxation, the criterion of residence used by national tax systems is precisely such criterion of differentiation. The CJ had the opportunity to use this criterion, for instance, in the *Commerzbank* case[946] when holding that:

> "Although it applies independently of a company' s seat, the use of the criterion of fiscal residence within national territory for the purpose of granting repayment supplement on overpaid tax is liable to work more particularly to the disadvantage of companies having their seat in other Member States. Indeed, it is most often those companies which are resident for tax purposes outside the territory of the Member State in question."

Staat, para. 19; ECJ 22 March 2007, C-383/05 *Raffaele Talotta v Belgian State*, para. 18; and ECJ 18 July 2007, Case C-182/06, *État du Grand Duchy of Luxemburg v Hans Ulrich Lakebrink and Katrin Peters-Lakebrink*, para. 27.

[944] See Frans Vanistendael, "The compatibility of the basic economic freedoms with the sovereign national tax systems of the Member States", *EC Tax Review* 3 (2003), p. 138.

[945] ECJ 12 February 1974, C-152/73 *Sotgiu v Deutsche Bundespost*, para. 11.

[946] See case ECJ, 13 July 1993, Case C-330/91, *The Queen v Inland Revenue Commissioners, ex parte Commerzbank AG*, para. 15. For other cases see *inter alia*, ECJ, 5 December 1989, Case C-3/88, *Commission v Italy* para. 8; ECJ 8 May 1990, Case C-175/88, *Biehl v Administration des Contributions du Gran-Duche de Luxembourg*, para 14; ECJ 8 July 1999, Case C-254/97 *Société Baxter, B. Braun Médical SA, Société Fresenius France and Laboratoires Bristol-Myers-Squibb SA v Premier Ministre, Ministère du Travail et des Affaires sociales, Ministère de l'Economie et des Finances and Ministère de l'Agriculture, de la Pêche et de l'Alimentation*, para. 10; ECJ 25 January 2007, Case C-329/05, *Finanzamt Dinslaken v Gerold Meindl*, para. 21, CJ 1 June 2010, Joined Cases *José Manuel Blanco Pérez and María del Pilar Chao Gómez v Consejería de Salud y Servicios Sanitarios (C-570/07) and Principado de Asturias (C-571/07)*, paras. 117-120.

An interesting case involving indirect discrimination in the field of tax groups it the situation in the *Hervis*[947] case. This case dealt with the Hungarian store retail trade tax and its application to groups of companies. Hervis was a subsidiary of SPAR AG, a parent company situated in Austria ("SPAR") and part of the SPAR Group. Hervis was liable to pay a share, in proportion to its turnover, of the special tax payable by all the undertakings belonging to that group on the basis of their overall turnover achieved in Hungary. As a result of the application of the steeply progressive scale of the special tax to the overall turnover of that group, Hervis claimed that it was subject to an average rate of tax considerably higher than that corresponding to the taxable amount consisting solely of the turnover of its own stores. In that regard, *Hervis* claimed that such tax discriminated against foreign owned Hungarian companies – which operated in a group structure – as per comparison with the Hungarian retail store chains which had the tax calculated individually, given that they are, for the most part, organised as sales outlets on the franchise model, having legal personality, and not belonging to a group. In particular, *Hervis* argued that there was a *de facto* discrimination since the subsidiaries of parent companies that have their registered offices in other Member States, in the light of the structure of store retail trade on the Hungarian market and, in particular, the fact that retail stores belonging to such companies are generally organised, as is the case of *Hervis*, in the form of subsidiaries.

The CJ concluded that[948]:

> "31. The legislation at issue in the main proceedings imposes, in particular, a criterion of differentiation between, on the one hand, taxable persons subject to the special tax which are linked, within the meaning of the applicable national legislation, to other companies within a group, and, on the other hand, taxable persons which are not part of a group of companies.
>
> 32. <u>That criterion of differentiation does not entail any direct discrimination</u> where the special tax on store retail trade is levied in identical circumstances for all the companies exercising that activity in Hungary.
>
> 33. <u>However, that criterion has the effect of disadvantaging legal persons which are linked to other companies within a group compared with legal persons which are not part of such a group of companies</u>.
> […]
>
> 40. Where that is the case, <u>legislation such as that at issue in the main proceedings, although it does not make a formal distinction according to the registered office of the companies, entails indirect discrimination</u> on the basis of the registered office of the companies for the purposes of Articles 49 TFEU and 54 TFEU. [Underscoe BdS]"

[947] CJ, 5 February 2014, C-385/12, *Hervis Sport- és Divatkereskedelmi Kft. v Nemzeti Adó- és Vámhivatal Közép-dunántúli Regionális Adó Főigazgatósága*.
[948] CJ, 5 February 2014, C-385/12, *Hervis Sport- és Divatkereskedelmi Kft. v Nemzeti Adó- és Vámhivatal Közép-dunántúli Regionális Adó Főigazgatósága*, paras. 31-33 and 40.

Therefore indirect discrimination involves a *de facto* discrimination, that is, a situation which is formally neutral in treatment has asymmetrical practical effects which result in a disadvantage to a particular category of taxpayers. Other cases entailing indirect discrimination in the context of tax groups are the *Papillon*[949] and *SCA Group Holding*[950] cases. In both cases (in France and the Netherlands, respectively) there were claims about consolidation between parent companies and sub-subsidiaries resident in the same Member State with the link being made through an intermediary company resident in another Member State. Both France and the Netherlands argued that there was no discrimination since according to the law in a domestic scenario it was never possible to consolidate the results between parent company and sub-subsidiaries without including also the intermediary company. The CJ noted in the *Papillon* case, that a French parent company which holds its French sub-subsidiaries through a subsidiary established in another Member State cannot benefit from the tax integration regime. By contrast, a French parent company is able to achieve tax integration with its French sub-subsidiaries where the intermediate subsidiary is established in France. Therefore, the ability to elect for the tax integration regime is accordingly dependent on whether the parent company holds its indirect shares through a subsidiary established in France or in another Member State. Consequently, EU situations are put at a disadvantage compared with purely domestic situations. In a similar fashion the Court concluded[951] in the *SCA Group Holding* case that there was indeed a factual disadvantage from the impossibility of forming a tax group between a domestic parent company and its sub-subsidiaries. The CJ considered irrelevant the argument that in a purely domestic situation no parent company can form a tax entity with sub-subsidiaries without including the intermediary company. For the Court the relevant point was that as from the moment that a parent company in the Netherlands which holds sub-subsidiaries by means of a non-resident subsidiary cannot, in any case, form a tax entity with those sub-subsidiaries while a Netherlands parent company which holds Netherlands sub-subsidiaries through a resident subsidiary still has the option to do so.[952] The Court concludes therefore

[949] ECJ 27 November 2008, C-418/07, *Société Papillon v Ministére du Budget, des Comptes Publics et de la Fonction Publique*.

[950] CJ 12 June 2014, Joined cases C-39/13, C-40/13 and C-41/13, *Inspecteur van de Belastingdienst Noord/kantoor Groningen v SCA Group Holding BV (C-39/13), X AG, X1 Holding GmbH, X2 Holding GmbH, X3 Holding BV, D1 BV, D2 BV, D3 BV, v Inspecteur van de Belastingdienst Amsterdam (C-40/13) and Inspecteur van de Belastingdienst Holland- Noord/kantoor Zaandam v MSA International Holdings BV, MSA Nederland BV (C-41/13)*.

[951] In a similar fashion see Opinion of AG Kokott delivered on 27 February 2014, in Joined cases C-39/13, C-40/13 and C-41/13, *Inspecteur van de Belastingdienst Noord/kantoor Groningen v SCA Group Holding BV (C-39/13), X AG, X1 Holding GmbH, X2 Holding GmbH, X3 Holding BV, D1 BV, D2 BV, D3 BV, v Inspecteur van de Belastingdienst Amsterdam (C-40/13) and Inspecteur van de Belastingdienst Holland-Noord/kantoor Zaandam v MSA International Holdings BV, MSA Nederland BV (C-41/13)*.

[952] CJ 12 June 2014, Joined cases C-39/13, C-40/13 and C-41/13, *Inspecteur van de Belastingdienst Noord/kantoor Groningen v SCA Group Holding BV (C-39/13), X AG, X1 Holding GmbH, X2 Holding GmbH, X3 Holding BV, D1 BV, D2 BV, D3 BV, v Inspecteur van de Belastingdienst Amsterdam (C-40/13) and Inspecteur van de Belastingdienst Holland- Noord/kantoor Zaandam v MSA International Holdings BV, MSA Nederland BV (C-41/13)*, para. 25.

that while formally identical, factually the disadvantage exists as groups which have a foreign link can never form a tax group.

It should be stressed that, conceptually, the distinction between direct and indirect discrimination is quite relevant in the sense that direct discrimination can only be justified by public policy reasons expressly provided in the relevant provisions of the TFEU, such as public morality, public policy, public security and public health. Differently, indirect discrimination may be justified by overriding reasons of public interest. Economic considerations, however, are excluded from public policy reasons. This implies that direct discrimination could never be justified as the listed public policy reasons are inapplicable in the tax sphere. It is probably due to that reason that the CJ has blurred this distinction between direct and indirect discriminations allowing the possibility to invoke, also for the cases involving direct discrimination, overriding reasons of public interest.

Differently, in the case of *restrictions,* one refers to national measures which, although not discriminatory - in the sense that they do not provide for a different treatment but rather treat nationals and non-nationals alike - they have the effect of impeding the exercise of the fundamental freedoms by being "liable to hinder or to make less attractive" or that "preclude or deter" the exercise of those freedoms.

Within the tax area, until 1997, the Court had used exclusively the term "discrimination". Arguably, the change occurred with the judgment in *Futura.*[953] While in its previous case law the analysis was whether the national tax provision was discriminatory, in this judgment, the CJ analysed if the rules at stake constituted a restriction[954] to the fundamental freedoms.
One of the issues dealt by the Court in *Futura* was the fact that Luxembourg legislation required, in order for a non-resident taxpayer to claim the carry forward of losses that, during the year in which the losses were incurred, the taxpayer had kept and held in Luxembourg, in respect of activities carried on there, accounts in compliance with the relevant local rules. This led in fact to a double administrative burden, as non-residents were obliged to duplicate their accounting both in the respective Member State of origin (in this case, France) and Luxembourg. The Luxembourg rules imposing these accounting requirements were indistinctly applicable and therefore, did not provide for the different treatment of non-residents when compared with the taxation of residents. The non-resident merely had to comply with requirements in Luxembourg. The Court assessed this double administrative burden as a restriction to the freedom of establishment.

[953] ECJ 15 May 1997, C-250/95 *Futura Participations SA and Singer v Administration des contributions*.
[954] In this sense, see Tom O'Shea, "European Tax Controversies: A British-Netherlands Debate: Back to Basics and is the ECJ Consistent?", *World Tax Journal* 2 IBFD (2013), p. 123. O'Shea considers that Futura represents the application of the concept of restriction in direct tax case law.

If the decision in the *Futura* case was the start of a new trend in the CJ language, it did not actually represent a shift in substance[955] but represented more a question of semantics.[956] [957] The Court does not necessarily merely analyse whether the effect of the rules is to hinder free movements but rather concentrates more or less explicitly on a discrimination test.[958] In fact, and irrespective of whether the national rule under scrutiny is part of the Home State or Host State, the CJ performs a comparative analysis which indicates that it is testing whether there is a discriminatory treatment of cross-border situations as per comparison with purely national scenario.[959] In other words, the Court is not performing a substantially different analysis from its traditional discrimination test.[960]

This led AG Geelhoed to consider that:[961]

> "[…] Upon rigorous analysis, it is my view that, in direct taxation sphere, there is no practical difference between these two manners of formulation i.e. "restriction" and "discrimination" […]."

---

[955] See Jukka Snell, "Non-Discriminatory Tax Obstacles in Community Law, 56 *International & Comparative Law Quarterly*, (2007) pp. 349-350. Differently see Frans Vanistendael "The compatibility of the basic economic freedoms with the sovereign national tax systems of Member States", *EC Tax Review* 3 (2003), p. 141. F. Vanistendael considers that the Court moved the application of the fundamental freedoms in the direction of a restriction approach.

[956] See Suzanne Kingston, "The Boundaries of Sovereignty: The ECJ's Controversial Role Applying Internal Market Law to Direct Tax Measures", *Cambridge Yearbook of European Legal Studies* 9 (2007), p. 298.

[957] Merely relying on its wording, the case is actually confusing as to which criterion – restriction or discrimination – is taken into account by the Court. First the CJ uses the discrimination test by using its typical case law analysis that:

> "although direct taxation falls within the competence of the Member States, the latter must none the less exercise that competence consistently with Community law and therefore avoid any <u>overt or covert discrimination</u> on grounds of nationality." [underscore BdS]

But then the CJ shifts to a restriction analysis by stating that:

> "such a condition [of keeping separate accounts] <u>may constitute a restriction</u>, within the meaning of Article 52 of the Treaty." [underscore BdS]

[958] See, inter alia, Servaas van Thiel, "The Direct Income Tax Case Law of the European Court of Justice: Past Trends and Future Developments, 62 *Tax Law Review* 1, New York (2008), pp. 149-150; Jukka Snell, "Non-Discriminatory Tax Obstacles in Community Law, 56 *International & Comparative Law Quarterly*, (2007) p. 351; Joachim Englisch, "The European Treaties" Implication of Direct Taxes 33 *Intertax* 8/9 Kluwer Law International BV (2005), p. 214 footnote 38 or Malcolm Gammie, "The Role of the European Court of Justice in the Development of Direct Taxation in the European Union", *Bulletin for International Taxation* 3 IBFD (2003), p. 91; Richard Lyal, "Non-Discrimination and Direct Tax in Community Law", *EC Tax Review* 2 (2003), p. 74.

[959] This contrasts with the restriction analysis performed in other areas in which the CJ considers that a national provision constitutes a restriction to the fundamental freedoms even if such measure applies without distinction to both domestic and cross-border scenarios.

[960] See Adam Zalasinski, "The Limits of the EC Concept of "Direct Tax Restriction on Free Movement Rights", the Principles of Equality and Ability to Pay, and the Interstate Fiscal Equity", 37 *Intertax* 5 (2009) Kluwer Law International BV, p. 288.

[961] See AG Geelhoed Opinion in case C-374/04 *Test Claimants in Class IV of the ACT Group Litigation* delivered on 23 February 2006, para. 36.

And this same AG stated even more clearly in his Opinion in the case *Test Claimants in the Thin Cap Group Litigation:*[962]

> "[…] the concept of indistinctly applicable "restrictions" of freedom of movement used in the Court's general free movement case-law cannot meaningfully be transposed *per se* to the direct tax sphere. Rather, due to the fact that criteria for asserting tax jurisdiction are generally nationality- or residence-based, the question is whether the national direct tax measure is indirectly or directly discriminatory […]".

Confirming that in the field of direct taxation the CJ analysis boils down to a discrimination test, it is interesting to note the reference made by AG Maduro in his Opinion in the *Marks & Spencer* case:[963]

> "[…] I would mention in this connection that not every restriction on economic or commercial freedom is a restriction on the exercise of the freedoms of movement. In fact that restriction always entails a kind of "discrimination" owing to Member States "elaborating measures […]."

This seems to support the (implicit) recognition that the *Keck* case law as developed in the field of the free movement of goods cannot be immediately applicable in considering the compatibility of national direct tax measures with the fundamental freedoms. In other words, the concept of indistinctly applicable restrictions cannot be transposed *per se* to the direct tax sphere.[964] Different reasons can be cited to justify that the CJ does not adopted its restriction approach typically from regulatory barriers to direct taxation. A first possible reason is the political sensitivity of national rules concerning direct taxation.[965] Taxation represents a central element in economic and social policy. In that regard, it is much more politically charged as per comparison, for instance, with provisions of a more technical nature such as rules concerning regulatory barriers. A different reason[966] might lie in the difficulty that could arise from the application of an obstacle-based case law to fiscal rules as all or almost every element of taxation would violate EU law as the taxation deriving

---

[962] See AG Geelhoed Opinion in case C-524/04 *Test Claimants in the Thin Cap Group Litigation* delivered on 29 June 2006, para. 48.

[963] Opinion of Advocate General Poiares Maduro in case C-446/03, *Marks & Spencer plc v David Halsey (HM Inspector of Taxes)*, delivered on 7 April 2005, para. 40

[964] Dissenting from these conclusions see Tom O'Shea, "European Tax Controversies: A British-Dutch Debate: Back to Basics and is the ECJ Consistent?", *World Tax Journal* 2 IBFD (2013), p. 127. O'Shea considers that the CJ approach in the direct tax field is no different from that adopted in its internal market case law more generally.

[965] See Jan Wouters, "The Case-Law of the European Court of Justice on Direct Taxes: Variations upon a Theme", *Maastricht Journal for European and Comparative Law* 1 (1994), p. 183.

[966] See Jukka Snell, "Non-Discriminatory Tax Obstacles in Community Law, 56 *International & Comparative Law Quarterly*, (2007) p. 357 or Suzanne Kingston "A Light in the Darkness: Recent Developments in the ECJ's Direct Tax Jurisprudence", *Common Market Law Review* 44, p. 1330.

from cross-border activity would, by itself, be liable to render less attractive or dissuade economic operations in other Member States.[967]
This was precisely the argument made by AG Kokott:[968]

> "[…]. So broad an approach must be rejected in principle in the area of tax law, since it would mean that, in the final analysis, all duties, no matter what kind, would have to be examined against EU law. However, EU law offers no guarantee to a citizen of the EU that transferring his activities to a Member State other than that in which he previously resided will be neutral as regards taxation. Given the disparities in the tax legislation of the Member States, such a transfer may or not be to the citizen's advantage in terms of taxation, depending on the circumstances."

Furthermore, according to AG Kokott:[969]

> "This view is not only shared by the Court in its case-law, because it has not yet explored a non-discriminatory restriction on the freedom of establishment in the area of tax law. Furthermore, the special status of tax law as regards the application of the fundamental freedoms is also supported by the treaties. For example, numerous provisions of the FEU Treaty regarding EU tax legislation provide for more stringent formal conditions and thus underline the fiscal sovereignty of the Member States."

13.5 The applicable fundamental freedom

The determination of the applicable fundamental freedom is a relevant step when applying the TFEU, in particular because the choice of the relevant freedom has effects on the territorial range of the protection granted by the Treaty.
Article 49 TFEU on the freedom of establishment (like other fundamental freedoms) only applies within the EU. Differently, the free movement of capital of Article 63 TFEU is the only fundamental freedom provision that is also expressly applicable in relation to non-EU Member States. For natural reasons, relating primarily with non-reciprocity, several suggestions have been made to delimitate the direct applicability of Article 63 TFEU in third country settings.[970]

Therefore, determining if a situation falls under one and/or the other fundamental freedoms may be relevant as to the extent of territorial protection. The dividing line between the free movement of capital and the freedom of establishment was traditionally one of the most

---

[967] This would ultimately affect the taxing powers of Member States which is a matter under their competence. See in this sense the Opinion of AG Kokott Opinion delivered on 22 January 2015, in case C-686/13 *X AB v Skatteverket*, para. 40.
[968] Opinion of AG Kokott, delivered on 21 November 2011, in case C-498/10 *X NV v Staatssecretaris van Financiën*, para. 28.
[969] Opinion of AG Kokott delivered on 5 September 2013, in case C-385/12 *Hervis Sport- és Divatkereskedelmi Kft v Nemzeti Adó- és Vámhivatal Kozép-dunántúli Regionális Adó Foigazgatósága,* paras. 83-84.
[970] See A. Cordewener, G. Kofler and C. Schindler, "Free Movement of Capital, Third Country Relationships and National Tax Law: An Emerging Issue before the ECJ", 47 *European Taxation* 3 IBFD (2007), p. 107 et seq.

relevant and controversial areas involving direct taxation. This is particularly relevant considering the potential overlaps between the two freedoms as national tax measures in breach of the freedom of establishment could also be restrictive of the free movement of capital calling, therefore, for the concurrent application of both provisions.

According to the settled case-law[971], in order to determine whether national legislation falls within the scope of one or other of the freedoms of movement, the purpose of the legislation concerned must be taken into consideration. The CJ has declared that in case the national legislation at stake is intended to be applied only to those shareholdings which enable the holder to exert a definite influence on a company's decisions and to determine its activities the situation falls only within the scope of Article 49 TFEU on the freedom of establishment.[972] Conversely, national provisions which apply to shareholdings acquired solely with the intention of making a financial investment without any intention to influence the management and control of the undertaking must be examined exclusively in light of the free movement of capital.[973]

---

[971] See, *inter alia*, cases ECJ 13 April 2000, Case C-241/98, C. *Baars v Inspecteur der Belastingdienst Particulieren/Ondernemingen Gorinchem*, para. 22; ECJ 12 September 2006, Case C-196/04, *Cadbury Schweppes and Cadbury Schweppes Overseas Ltd. v. Commissioners of Inland Revenue* paras. 31-33; ECJ 12 December 2006 Case C-374/04 *Test Claimants in Class IV of the ACT Group Litigation v. Commissioners of Inland Revenue* paras. 37-38; ECJ 12 December 2006, Case C-446/04, *Test Claimants in the FII Group Litigation v. Commissioners of Inland Revenue*, para. 36; ECJ 13 March 2007, Case C−524/04 *Test Claimants in the Thin Cap Group Litigation*, paras. 26 to 34; ECJ 4 June 2009, Joined Cases C-439/07 and C-499/07, *Belgische Staat v KBC Bank NV, and Beleggen, Risicokapitaal, Beheer NV v Belgische Staat*, para. 68; CJ 10 February 2011, Joined Cases C-436/08 and C-437/08, *Haribo Lakritzen Hans Riegel BetriebsgmbH, Österreichische Salinen AG v. Finanzamt Linz*, para. 34; CJ 15 September 2011, Case C-310/09, *Ministre du Budget, des Comptes publics et de la Fonction publique v Accor SA,* para. 31; CJ 19 July 2012, Case C-31/11, *Marianne Scheunemann v Finanzamt Bremerhaven*, para. 23; and CJ 13 November 2012, Case C-35/11, *Test Claimants in the FII Group Litigation v Commissioners of Inland Revenue and The Commissioners for Her Majesty's Revenue & Customs,* para. 90.

[972] See cases ECJ 12 December 2006, C-446/04, *Test Claimants in the FII Group Litigation v. Commissioners of Inland Revenue*, para. 37; CJ 21 October 2010, C-81/09, *Idryma Typou AE v Ypourgos Typou kai Meson Mazikis Enimerosis*, para. 47; CJ 15 September 2011, C-310/09, *Ministre du Budget, des Comptes publics et de la Fonction publique v Accor SA*, para. 32; CJ 13 November 2012, C-35/11, *Test Claimants in the FII Group Litigation v Commissioners of Inland Revenue and The Commissioners for Her Majesty's Revenue & Customs*, para. 91; CJ 28 February 2013, C-168/11, *Manfred Becker, Christa Becker v Finanzamt Heilbronn*, para. 25; CJ 11 September 2014, Case C-47/12, *Kronos International Inc. v Finanzamt Leverkusen*, para. 31.

[973] See cases ECJ 17 September 2009, C-182/08, *Glaxo Wellcome GmbH & Co. KG v Finanzamt Munchen II*, para. 40; CJ 10 February 2011, Joined cases C-436/08 and C-437/08, *Haribo Lakritzen Hans Riegel BetriebsgmbH, Österreichische Salinen AG v. Finanzamt Linz*, para. 35; CJ 15 September 2011, C-310/09, *Ministre du Budget, des Comptes publics et de la Fonction publique v Accor SA,* para. 32; CJ 13 November 2012, C-35/11, *Test Claimants in the FII Group Litigation v Commissioners of Inland Revenue and The Commissioners for Her Majesty's Revenue & Customs*, para. 92; CJ 28 February 2013, C-168/11, *Manfred Becker, Christa Becker v Finanzamt Heilbronn*, para. 26; CJ 11 September 2014, C-47/12, *Kronos International Inc. v Finanzamt Leverkusen*, para. 32; CJ 10 June 2015, C-686/13, *X AB v Skatteverket*, para. 22.

If the national legislation does not depend on the extent of the shareholding, then the national legislation potentially affects both the freedom of establishment and free movement of capital.[974] In such scenario one should look to the facts of the case, that is, to the particular shareholding in question and whether it allows a definitive influence over the company's activities in order to determine if the situation to which the dispute in the main proceedings relates falls within the scope of one or other of those provisions.[975] In the Court's own words:[976]

> "27. In the present case, the contested rules apply regardless of the amount of shareholding held in a company. In so far as those rules relate to dividends which originate in a Member State, it cannot therefore be determined from their purpose whether they fall predominantly within the scope of Article 49 TFEU or Article 63 TFEU (see, to that effect, *Test Claimants in the FII Group Litigation*, paragraph 93).
> 28. In such circumstances, the Court takes account of the facts of the case in point in order to determine whether the situation to which the dispute in the main proceedings relates falls within the scope of one or other of those provisions (*Test Claimants in the FII Group Litigation*, paragraph 94 and the case-law cited)."

Naturally that this leads to the question of how to determine a controlled holding, i.e. *"a shareholding that enables the holder to have a definite influence on a company's decisions and to determine its activities"*.[977] Depending on the particular facts, the CJ has found such influence to exist in case of participations of 100%,[978] 75%,[979] 66.66%,[980] 50%,[981] 45%,[982] or

---

[974] See ECJ 24 May 2007, C-157/05 *Wilfried L. Holbock v Finanzamt Salzburg-Land*, paras. 23-24; ECJ 26 March 2009, C-326/07 *Commission of the European Communities v Italian Republic*, para. 36; and CJ 21 October 2010, C-81/09 *Idryma Typou AE v Ypourgos Typou kai Meson Mazikis Enimerosis*, para. 49.

[975] See ECJ 12 December 2006, C-446/04 *Test Claimants in the FII Group Litigation v. Commissioners of Inland Revenue*, paras. 37-38; ECJ 26 June 2008, C-284/06 *Finanzamt Hamburg-Am Tierpark v Burda GmbH, formerly Burda Verlagsbeteiligungen GmbH*, paras. 71-72; CJ 21 January 2010, C-311/08 *Société de Gestion Industrielle SA v État belge*, paras. 33-37; CJ 13 November 2012, C-35/11 *Test Claimants in the FII Group Litigation v Commissioners of Inland Revenue and The Commissioners for Her Majesty's Revenue & Customs*, paras. 93-94; CJ 28 February 2013, C-168/11 *Manfred Beker, Christa Beker v Finanzamt Heilbronn*, paras. 27-28; and CJ 11 September 2014, C-47/12 *Kronos International Inc. v Finanzamt Leverkusen*, para. 37.

[976] See *inter alia*, CJ 28 February 2013, C-168/11 *Manfred Beker, Christa Beker v Finanzamt Heilbronn*, paras. 27-28.

[977] See, *inter alia*, cases ECJ 13 April 2000, C-251/98 *C. Baars v. Inspecteur der Belastingen Particulieren/Ondernemingen Gorinchem*, paras. 21-22; ECJ 21 November 2002, C-436/00 *X, Y v. Riksskatteverket*, paras. 66-68; ECJ 12 September 2006, C-196/04 *Cadbury Schweppes and Cadbury Schweppes Overseas Ltd. v. Commissioners of Inland Revenue* para. 31; ECJ 12 December 2006, C-374/04 *Test Claimants in Class IV of the ACT Group Litigation v. Commissioners of Inland Revenue*, para. 39; and ECJ 12 December 2006, C-446/04, *Test Claimants in the FII Group Litigation v. Commissioners of Inland Revenue*, para. 58.

[978] See, *inter alia*, cases ECJ 13 April 2000, C-241/98 *C. Baars v Inspecteur der Belastingdienst Particulieren/Ondernemingen Gorinchem*, paras. 20 et seq.; ECJ 7 September 2006, C-470/04 *N v Inspecteur van de Belastingdienst Oost/Kantoor Almelo,* paras. 24 et seq.; ECJ 12 December 2006, C-374/04 *Test Claimants in Class IV of the ACT Group Litigation v. Commissioners of Inland Revenue*, paras. 37-38; and ECJ 12 December 2006, C-446/04 *Test Claimants in the FII Group Litigation v. Commissioners of Inland Revenue*, para. 37.

in some cases even 25%[983] may suffice[984] or, irrespective of the participation as long as actual control is exercised in fact.[985]

This *fact-oriented approach* was developed by the CJ within the context of intra-EU situations in order to determine which precise freedom was restricted in the case the national legislation would fall within the scope of one or the other of the freedoms of movement but a parallelism was made in the case law also as to its application to situations involving third countries. Therefore, when the influence in a company established in third country was decisive, the assessment was made in the framework of the freedom of establishment. The application of the free movement of capital would thus be excluded. Since no right to freedom of establishment exists in third country relations the situation would not be covered by the TFEU.

However, the Court later changed its position[986] and developed a specific reasoning[987] regarding third countries. In such context, it considered that it is sufficient to examine the purpose of the legislation at stake.[988] Therefore, if the national legislation in dispute does not apply exclusively to shareholdings which allow the holder to exercise decisive influence on the decisions of the company concerned and to determine its activities, then the situations should be assessed in light of the free movement of capital. This applies irrespective of the size of the shareholding at stake,[989] Conversely, if it is apparent from the

---

[979] ECJ 13 March 2007, C-524/04 *Test Claimants in the Thin Cap Group Litigation*, para. 32.
[980] ECJ 10 May 2007, C-492/04 *Lasertec Gesellschaft fur Stanzformen mbH v Finanzamt Emmendingen*, para. 23 or ECJ 24 May 2007, C-157/05 *Wilfried L. Holbock v Finanzamt Salzburg-Land*, paras. 9 and 24.
[981] ECJ 12 September 2006, C-196/04 *Cadbury Schweppes and Cadbury Schweppes Overseas Ltd. v. Commissioners of Inland Revenue* paras. 6 and 32.
[982] CJ 10 June 2015, C-686/13 *X AB v Skatteverket*, para. 24.
[983] See ECJ 10 May 2007, C-492/04 *Lasertec Gesellschaft fur Stanzformen mbH v Finanzamt Emmendingen*, para. 21.
[984] Conversely, the CJ has affirmed that a participation of 10% while admittedly may represent more than a mere financial investment still does not mean that the holder exercises a definitive influence over the company and therefore both freedom of establishment and free movement of capital may potentially apply. See CJ 11 September 2014, C-47/12 *Kronos International Inc. v Finanzamt Leverkusen*, paras. 34-35 or CJ 10 June 2015, C-686/13 *X AB v Skatteverket*, para. 21.
[985] See ECJ 10 May 2007, C-492/04, *Lasertec Gesellschaft fur Stanzformen mbH v Finanzamt Emmendingen*, para. 22.
[986] See also the Opinion of AG Mengozzi delivered on 6 November 2012, in case C-190/12, *Emerging Markets Series of DFA Investment Trust Company v Dyrektor Izby Skarbowej w Bydsgoszczy*, para. 19.
[987] CJ 13 November 2012, C-35/11 *Test Claimants in the FII Group Litigation v Commissioners of Inland Revenue and The Commissioners for Her Majesty's Revenue & Customs,* paras. 96-100.
[988] CJ 13 November 2012, C-35/11 *Test Claimants in the FII Group Litigation v Commissioners of Inland Revenue and The Commissioners for Her Majesty's Revenue & Customs,* para. 96; CJ 10 April 2014, C-190/12 *Emerging Markets Series of DFA Investment Trust Company v Dyrektor Izby Skarbowej w Bydsgoszczy*, para. 29; and CJ 11 September 2014, C-47/12 *Kronos International Inc. v Finanzamt Leverkusen*, paras. 38 and 41.
[989]CJ 13 November 2012, C-35/11 *Test Claimants in the FII Group Litigation v Commissioners of Inland Revenue and The Commissioners for Her Majesty's Revenue & Customs,* para. 99, and CJ 10 April 2014, C-

purpose of the national legislation that it can only apply to those shareholdings which enable the holder to exert a definite influence, neither the freedom of establishment nor the free movement of capital may apply.[990] In other words: in order for a national provision to be potentially incompatible with the free movement of capital regarding third States, the national rule should not be aimed exclusively at controlling holdings.

From the above it is possible to conclude that the CJ has barred the application of Article 63 TFEU if the national measures at stake are exclusively aimed at applying to situations of controlled holdings. The Court's reasoning[991] is based on the fact that since the TFEU does not extend the freedom of establishment to third countries, it is relevant to ensure that the interpretation of the free movement of capital does not enable situations which do not fall within the limits of the territorial scope of that freedom to benefit from it. In other words, the Court's case law considers that if the focus of the national legislation is establishment then only the freedom of establishment is effectively engaged excluding third country investments from Treaty protection.

The legislation which refers to relations involving groups of companies[992] and the application of group taxation regimes requires majority participations and applies exclusively to situations in which the holder exercises decisive influence over the companies which are members of the group. This same conclusion was reached by the CJ in the *Hervis* case. As referred to, that case dealt with a Hungarian indirect discriminatory tax applicable to groups of companies. The CJ analysed the purpose of the Hungarian rules which were applicable to *linked undertakings* defined as situations of a company holding a *direct or indirect majority influence in another company*.[993] It concluded[994] that in those circumstances the case concerned the interpretation of the freedom of establishment.

Therefore, and following the CJ case law, only the freedom of establishment is affected and accordingly, situations involving groups within a third country context do not fall within the

---

190/12 *Emerging Markets Series of DFA Investment Trust Company v Dyrektor Izby Skarbowej w Bydsgoszczy*, para. 30.

[990] ECJ 13 March 2007, C-524/04 *Test Claimants in the Thin Cap Group Litigation*, paras. 33-34 and 101-102; CJ 10 May 2007, C-492/04 *Lasertec Gesellschaft fur Stanzformen mbH v Finanzamt Emmendingen*, paras. 22 and 27 or CJ 13 November 2012, C-35/11 *Test Claimants in the FII Group Litigation v Commissioners of Inland Revenue and The Commissioners for Her Majesty's Revenue & Customs*, para. 98.

[991] CJ 13 November 2012, C-35/11 *Test Claimants in the FII Group Litigation v Commissioners of Inland Revenue and The Commissioners for Her Majesty's Revenue & Customs,* para. 100.

[992] See, *inter alia*, cases ECJ 12 September 2006, C-196/04 *Cadbury Schweppes and Cadbury Schweppes Overseas Ltd. v. Commissioners of Inland Revenue*, para. 32; *Test Claimants in the FII Group Litigation v. Commissioners of Inland Revenue*, para. 118; and ECJ 13 March 2007, C-524/04 *Test Claimants in the Thin Cap Group Litigation*, para. 33.

[993] CJ 5 February 2014, C-385/12 *Hervis Sport- és Divatkereskedelmi Kft. v Nemzeti Adó- és Vámhivatal Közép-dunántúli Regionális Adó Főigazgatósága*, para. 23.

[994] CJ 5 February 2014, C-385/12 *Hervis Sport- és Divatkereskedelmi Kft. v Nemzeti Adó- és Vámhivatal Közép-dunántúli Regionális Adó Főigazgatósága*, para. 24.

scope of the TFEU as neither the freedom of establishment nor the free movement of capital may be relied upon. While the previous statement is accurate in situations when there is a "direct" involvement of company which is resident in a third country, that is, when that foreign company wants to have direct access to the internal market (for example, claim from cross-border loss relief between a company resident in a Member State and the losses incurred by its subsidiary in a third country), questions arise as to situations in which there is an "indirect" involvement of companies resident in a third State in an intra-Community scenario (e.g. intra-group transaction between two EU sister companies with a common parent company resident in a third country). The doubts in this last case arise particularly because of the Court's judgment in *Thin Cap GLO*[995] which involved, *inter alia*, an intra-Community loan between companies of two Member States controlled by a common US parent company. In this case, the Court broadened the exclusion of third country corporate groups from EU law access by considering that there was an inward establishment into the EU by the common parent company located in a third country and, consequently, considered that the situation was excluded from Treaty protection. In other words, the Court used a control criterion where two EU located companies performing an intra-community transactions are excluded from Treaty access due to the fact that they are controlled by a company located in a third country.

This line of reasoning is dubious and has, correctly in my view, been subject to criticism.[996] Later, and in a specific tax group context the Court was confronted again with this issue in the *Felixstowe Dock* case.[997] The case dealt with the application of UK rules on loss relief between two UK subsidiaries in which the ultimate parent company as well as certain intermediate companies were established in third States. The Court considered irrelevant the third country link as regards the application of the freedom of establishment and the possibility to rely on the TFEU. The CJ concluded that there is no provision under EU law in which the origin of the shareholders of companies resident in the EU affects the right of those companies to rely on the freedom of establishment. The status of being an EU company is based in accordance with Article 54 TFEU on the location of the corporate seat and legal order where the company is incorporated and not on the nationality of its shareholders.[998] This reasoning followed by the Court in the *Felixstowe Dock* case confirms that the indirect involvement of companies located in third States are not relevant as regards the Treaty protection of the companies which claim Treaty protection.[999] It actually recovers

[995] ECJ 13 March 2007, C-524/04 *Test Claimants in the Thin Cap Group Litigation*, paras. 97-99.

[996] See, *inter alia*, Servaas van Thiel, "The Direct Income Tax Case Law of the European Court of Justice: Past Trends and Future Developments" 62 *Tax Law Review* 1, New York (2008), pp. 157-159 and 179-180.

[997] See CJ 1 April 2014, C-80/12 *Felixstowe Dock and Railway Company Ltd and others v The Commissioners for Her Majesty's Revenue & Customs*. For an analysis of the case see 14.2.1.4 *infra*.

[998] See CJ 1 April 2014, C-80/12 *Felixstowe Dock and Railway Company Ltd and others v The Commissioners for Her Majesty's Revenue & Customs*, para. 40.

[999] The Court brought a further argument considering that the resident of the ultimate parent company and the intermediate companies was, in any event, irrelevant as regards the application of the UK legislation at stake since, in the particular case, the loss relief between the two UK subsidiaries was rejected due to the fact that

the traditional line of reasoning of the Court previously expressed in the *Halliburton*[1000] case, which applied EU law to a group of companies which were under common control of a parent company located in a third State.

13.6 Interim Conclusions

As the CJ consistently reiterates, direct taxation is still within the competence of the Member States. Since harmonization measures in the direct tax area remain scarce, Member States must ensure that their national legislation complies with the fundamental freedoms that govern the internal market. The assessment of whether a particular measure is compatible with EU law is a competence of the CJ. Nevertheless, the delimitation of the tax jurisdiction exercised by the Member States remains outside the scope of EU law. Member States are free to define and allocate their taxing rights. Therefore, the Treaty freedoms are only engaged once a Member State has decided to assert tax jurisdiction over a certain person or item of income, ensuring that such jurisdiction is applied in accordance with the Treaty.

This requires determining what constitutes a *prima facie* infringement of the Treaty freedoms. A correct delimitation of the first step in finding an EU law breach – the existence of discriminatory or restrictive measure – means outright stopping the analysis and finding a domestic tax measure such as is compliant with that Member State's obligations under the Treaty. However, when the discrimination and restriction concepts are muddled, their standards of application relaxed or misapplied, then a Member State might, at first glance, be in the process of infringing its Treaty obligations. The consequence is that a burden is placed on that particular Member State, which must then pass the rule of reason analysis under which it may deviate from its treaty obligations as regards the fundamental freedoms if there is an overriding reason in the public interest that supports that measure which must be concomitantly applied in a proportionate measure.

The Treaty freedoms provide for two degrees of protection: the prohibition of restrictions and the prohibition of discriminations. Particularly in the case of direct taxation, this distinction has often been blurred by the CJ's language. However, both the Advocate Generals and the Court itself do not appear to favour to find non-discriminatory restrictions in direct taxation.

---

the link company – in this case a Luxembourg company – was not resident in the UK while the legislation was silent as regards the residence of any other companies in the chain. In any event and from my interpretation of this case, this was brought as a mere secondary argument. See CJ 1 April 2014, C-80/12 *Felixstowe Dock and Railway Company Ltd and others v The Commissioners for Her Majesty's Revenue & Customs,* para. 41.

[1000] See ECJ 12 April 1994, C-1/93 *Halliburton v Staatssecretaris van Financien*, paras. 3-4 and 23. For an analysis of the case see 11.3.3 *supra*.

One of the fundamental issues when analysing if a situation falls within the scope of the Treaty protection involves determining which fundamental freedom applies. This is relevant in third country situations considering that only the free movement of capital in such scenarios. By nature, group taxation regimes require high thresholds of participation which, pursuant to the CJ case law determines that only the freedom of establishment applies. As a consequence, group situations involving companies resident in third States cannot benefit from the protection of the TFEU freedoms.

Chapter 14
The relevant CJ case law regarding Group Taxation

14.1 Introduction

The purpose of this chapter is to make a brief description of the most relevant the case law[1001] of the CJ and its impact on group taxation regimes. Therefore, it necessitates a general analysis of the decisions of the Court that dealt with the application of the freedom of establishment regarding different situations that directly (or indirectly) relate to group taxation. The analysis is divided into different categories or clusters of cases. First, it starts by describing the cases regarding the definition of a group perimeter involving a cross-border element - the existence of a foreign link such as a foreign intermediate holding company - while the group entities requesting for a group were located in the same Member State. Subsequently, it describes cases of effective group taxation, either because the Court was confronted with the question whether a Member State was required under the freedoms to extend its group taxation system to cross-border situations or have to deal with a question regarding one specific element of such group taxation system. It then describes a group of cases dealing with the definition of group perimeter in cases involving PEs where there are differences in treatment due to legal form. Finally, and by its relevance to the group taxation regimes and the interpretation of EU law in general, the set of cases concerns specifically the topic of cross-border loss compensation of foreign losses with domestic profits and whether Member States may be required to take into account losses that were generated outside their territory.

14.2 The case-law

14.2.1 Foreign link companies

14.2.1.1 ICI Colmer

The first case in which the CJ was called to rule on the personal scope of group taxation regimes was the *ICI Colmer* case.[1002] Imperial Chemical Industries (ICI) was a UK resident company which indirectly owned a loss-making operational company equally resident in the UK.[1003] The intermediary holding was also a UK resident company which had 23

[1001] The methodology followed is based on a chronological order of the judgments of the CJ related to group taxation regimes.

[1002] See ECJ 16 July 1998, C-264/96 *Imperial Chemical Industries pls v K. Hall Colmer (Her Majesty's Inspector of Taxes)*.

[1003] See on this case, *inter alia*, Timothy J. Lyons, "ICI v Colmer affirms Community supremacy", 1 *British Tax Review* (1999), pp. 65-69, D. Hughes, "Imperial Chemical Industries plc (ICI) v. Kenneth Hall Colmer

subsidiaries, four being resident in the UK, *sic* resident elsewhere in the EU and 13 resident in third countries. ICI claimed loss relief in respect of the losses incurred by its indirectly held loss-making UK company. In order for this claim to succeed, ICI had to satisfy the requirements set forth under the UK legislation concerning consortium relief. Among these requirements was the condition that the intermediary holding was considered to be a company by holding shares of companies which are its 90% trading subsidiaries. The interpretation of the Inland Revenue was that trading subsidiaries referred merely to UK resident companies. Since the intermediary holding company had a majority of non-UK subsidiaries, it was no longer qualified as a UK resident company and therefore, group relief to ICI was denied although the losses were surrendered by a UK company.

The CJ considered that to require that the subsidiaries of a holding company had to be UK residents was an infringement to the freedom of establishment.[1004] As usual, the Court moved to consider whether there was any justification for the discriminatory treatment. The UK put forward two justifications. First, it contended that the requirement of all subsidiaries being UK resident was designed to reduce the risk of tax avoidance. It then argued that the provisions were designed to prevent a loss of tax revenue. Regarding the first alleged justification, the CJ noted that the provisions in question were not designed to prevent tax avoidance by the use of wholly artificial arrangements as even one non-UK resident subsidiary would be enough to create a risk of tax avoidance.[1005] Interestingly, it considered tax avoidance to be an EU matter[1006] by observing that the establishment of a company outside the UK did not necessarily entail tax avoidance, since the company would in any event be subject to the tax legislation of the State of establishment.[1007] The second justification was rejected by the Court based on the fact that loss of tax revenue is not an accepted justification.[1008] It further considered that coherence of the tax system could also not constitute an accepted justification as there was no direct link between granted for losses incurred by a resident subsidiary and the taxation of profits made by a non-resident subsidiary.

(Her Majesty's Inspector of Taxes)" 53 *Bulletin for International Fiscal Documentation* 1 IBFD (1999), pp. 13-15 or H. Corben, "Commentary on ICI v Colmer case", 3 *EC Tax Journal* 1 (1998), pp. 29-34.

[1004] See ECJ 16 July 1998, C-264/96 *Imperial Chemical Industries pls v K. Hall Colmer (Her Majesty's Inspector of Taxes)*, paras. 22-24.

[1005] See ECJ 16 July 1998, C-264/96 *Imperial Chemical Industries pls v K. Hall Colmer (Her Majesty's Inspector of Taxes)*, paras. 25-27.

[1006] See Timothy J. Lyons, "ICI v Colmer affirms Community supremacy", 1 *British Tax Review* (1999), p. 67.

[1007] See ECJ 16 July 1998, C-264/96 *Imperial Chemical Industries pls v K. Hall Colmer (Her Majesty's Inspector of Taxes)*, para. 26.

[1008] See ECJ 16 July 1998, C-264/96 *Imperial Chemical Industries pls v K. Hall Colmer (Her Majesty's Inspector of Taxes)*, para. 28.

14.2.1.2 X AB & Y AB

Another relevant judgment in definition of the personal scope of groups was the *X AB & Y AB* case.[1009] The Swedish parent company X AB and its domestic subsidiary Y AB jointly applied for a ruling to the Swedish ruling commission. The purpose was to benefit from the group taxation system as regards certain intragroup transfers. One of the envisaged corporate reorganizations involved that Y AB would be held for 15% by a Netherlands and a German subsidiary of its Swedish parent company X AB with the remaining shareholding being held by directly by X AB or Swedish subsidiaries of this company. Y AB relied on the combined application of the foreign ownership clause of both tax treaties concluded between Sweden and Netherlands and Germany in order to extend the effects of the Swedish group regime to indirect participations. The Swedish authorities denied such possibility arguing the impossibility to combine the effects of two non-discrimination provisions of two different tax treaties. X AB and Y AB appealed this decision and the question was referred to the CJ.

The Court essentially concluded that the difference in treatment – impossibility to benefit from the application of the group taxation system between two Swedish companies with a multiple foreign link - based on the seat of the intermediary companies amounted to an unjustified restriction to the freedom of establishment.

14.2.1.3 Papillon

The following case in which the CJ was called to rule on the personal scope of group taxation regimes was in *Papillon*.[1010] The case[1011] dealt with the application of the French consolidation regime. Société Papillon was a company resident in France which owned 100% of the shares in a company (APC BV) resident in Netherlands. This company held 99.99 % of the shares in a subsidiary (SARL Kiron) also resident in France which in turn, held several French companies. Papillon applied for the French group consolidation regime in order to consolidate the results of Papillon, SARL Kiron (and its related subsidiaries) while excluding APC BV from the group perimeter. The French tax authorities rejected this request, based on the fact that group consolidation was only possible in a case of uninterrupted chain of shareholdings between the companies concerned, meaning that all

[1009] See ECJ 18 November 1999, C-200/98 *X AB & Y AB v Riksskatteverket*.

[1010] See ECJ 27 November 2008, C-418/07 *Société Papillon v Ministére du Budget, des Comptes Publics et de la Fonction Publique*.

[1011] See, *inter alia*, A. Bricet et al., French Group Consolidation Regimes Violates EC Treaty, ECJ Rules, *Tax Notes International* (15 December 2008), pp. 848-850, J. Delauriere, "The Papillon Decision: Upcoming French Group Reform", *Tax Notes International* (9 March 2009) pp. 903-906, Pierre-Henry Durand and Yves Rutschamnn, "The Papillon case : a first step toward a new era in European tax treatment of groups?", 18 *EC Tax Review* 3 (2009) pp. 122-130, Frank Engelen, "De gevolgen van de zaak Papillon voor de Nederlandse fiscale eenheid", *NTFR* 2009/73, Sjoerd Douma, "Papillon : group consolidation should be available for indirectly owned subsidiary", *Highlights & Insights on European taxation* 2009/2.1, pp. 44-54.

the companies in the chain had to be included in the group, something which was not possible in this case since non-resident companies could not be included in the group perimeter.

The CJ noted that the inability of a French company to consolidate with its French sub-subsidiaries when the intermediary company was established in another Member State would created a difference between domestic and cross-border situations[1012] which, if accepted, would deprive the rules relating to the freedom of establishment of all meaning.[1013] Therefore, and since EU situations were put in a disadvantage as compared to purely domestic situations it considered it a breach to the freedom of establishment. As regards possible justifications, the Court held that the French regime could not be justified by the need to preserve a balanced allocation of the powers to tax between Member States as the situation involved only profits and losses of companies resident in France. Consequently, it also excluded the risk of tax avoidance. However, it considered that the French system could be justified by the need to preserve the coherence of the tax system. In particular, it drew attention to the fact that the neutralization of intra-group transactions is an important feature of the functioning of the group taxation regime. This objective could be compromised in the case of a non-resident intermediate company not part of the consolidation regime because if a sub-subsidiary would suffer a loss, such loss could be taken into account twice, both at the level of the consolidated group and again at the level of the parent company of the group through a write-down of the value of the shares held in the non-resident intermediate company. However, it considered it disproportionate to exclude the possibility of the group consolidation altogether due to the existence of Council Directive on administrative cooperation which would allow French competent authorities to request Member States for all the relevant information. In addition, they could also address the French parent company to determine whether any registered losses on the shares of the intermediary subsidiary were originated indirectly through a loss of the sub-subsidiary. Therefore, the Court concluded that consolidation between two French companies with an intermediary foreign link should, in principle, be possible.

14.2.1.4 Felixstowe Dock

Again, in the case *Felixstowe Dock,*[1014] the CJ was called to deal with the personal scope of a tax group. The case dealt with[1015] the UK legislation on the consortium relief and in

---

[1012] See ECJ 27 November 2008, C-418/07 *Société Papillon v Ministére du Budget, des Comptes Publics et de la Fonction Publique,* para. 22.

[1013] See ECJ 27 November 2008, C-418/07 *Société Papillon v Ministére du Budget, des Comptes Publics et de la Fonction Publique,* para. 26.

[1014] See CJ 1 April 2014, C-80/12 *Felixstowe Dockand Railway Company Ltd and others v The Commissioners for Her Majesty's Revenue & Customs*.

[1015] For an analysis of this case see Bruno da Silva "Felixstowe Dock and Railway Company Ltd. & Ors v Revenue & Customs: UK group relief: Non Discrimination in Tax Treaties and EU Law", *Highlights & Insights on European Taxation* 2013/2.1

particular with the requirement that the link company of the UK companies applying for the consortium relief is also resident in the UK.

Hutchison Whampoa Ltd ("the ultimate parent company") was a company having its seat in Hong Kong. The claimant companies had their seats in the United Kingdom. As indirect subsidiaries owned at least for 75% by the ultimate parent company, they were members of a group. Hutchison 3G UK Ltd ("the loss-surrendering company") was also a company having its seat in the United Kingdom. It was owned indirectly by a consortium and constituted, on this basis, a consortium company. That consortium included Hutchison 3G UK Investment Sàrl ("the link company"), a company having its seat in Luxembourg. It was through that company that the claimant companies were connected, for the purposes of the UK tax legislation relating to consortium group relief, to the loss-surrendering company. Hutchison Sàrl itself was owned indirectly by the ultimate parent company, through various companies some of which had their seat in third States. The claimant companies, which made a profit in the same tax years, sought to take advantage of the possibility to offset its profits against the losses of Hutchison 3G UK Ltd. Their claims were rejected on the ground that the link company was neither resident in the United Kingdom for tax purposes nor carried on a trade there through a permanent establishment. The question brought before the CJ was, in essence, whether Articles 49 TFEU and 54 TFEU must be interpreted as precluding legislation of a Member State under which it is possible for a resident company that is a member of a group to have transferred to it losses sustained by another resident company which belongs to a consortium where a "link company" which is a member of both the group and the consortium is also resident in that Member State, irrespective of the residence of the companies which hold, themselves or by means of intermediate companies, the capital of the link company and of the other companies concerned by the transfer of losses, whereas that legislation rules out such a possibility where the link company is established in another Member State.

The CJ started by observing that the residence condition laid down for the link company introduces a difference in treatment between, on the one hand, resident companies connected, for the purposes of the national tax legislation, by a link company established in the UK, which are entitled to the tax advantage at issue, and, on the other hand, resident companies connected by a link company established in another Member State, which are not entitled to it.
Therefore, it considered that such difference in treatment makes it less attractive in tax terms to establish a link company in another Member State, since the applicable national legislation grants the tax advantage at issue only where link companies are established in the UK.
After the finding that there was a restriction to the freedom of establishment the CJ went on to analyze whether such restriction could be justified. As regards the argument based on the need to preserve the powers of taxation between Member States, the CJ considered that in a situation such as that at issue in the main proceedings the power of the host Member State, on whose territory the economic activity giving rise to the losses of the consortium

company is carried out, to impose taxes is not at all affected by the possibility of transferring, by relief and to a resident company, the losses sustained by another company, since the latter is also resident for tax purposes in that Member State.
In addition as regards a possible justification based on combating tax avoidance, the CJ recalled that for a restriction on freedom of establishment to be justified on such grounds, the specific objective of that restriction must be to prevent conduct involving the creation of wholly artificial arrangements which do not reflect economic reality with a view to escaping the tax normally due on the profits generated by activities carried out on national territory. That was, however, not the case of the legislation at stake, which in no way pursues a specific objective of combating purely artificial arrangements, but is designed to grant a tax advantage to companies that are members of groups generally, and in the context of consortia in particular.

14.2.1.5 SCA Group Holding BV

In the *SCA Holding* case,[1016] the CJ had to deal with the three joined cases concern the compatibility of the Netherlands legislation on fiscal unity with the freedom of establishment and have the common feature of the linked companies being established in another Member State, preventing the companies in the group which are established in the Netherlands from combining in a fiscal unity.
One of the conditions to form such fiscal unity is that a Netherlands resident company could only be included in the fiscal unity if Members of the fiscal unity hold directly at least 95% of the capital of that company. This excludes Netherlands resident companies held via foreign intermediary group companies or a foreign parent company from becoming part of such fiscal unity. Foreign resident companies can only be included in a fiscal unity if specific conditions are met. One of these conditions is that they should carry on a Netherlands permanent establishment.

Essentially, there were two different group structures under scrutiny in these cases: (i) forming a fiscal unity between a Netherlands parent company and Netherlands second-tier subsidiaries when the intermediate EU subsidiaries are not established in the Netherlands (Cases C-39/13 and C-41/13), and (ii) forming a fiscal unity between Netherlands subsidiaries (associated companies) held, directly or indirectly, by a foreign EU parent company (case C-40/13).

In both group structures, the CJ confirmed that the impossibility to form a fiscal unity between the companies established in the Netherlands due to the existence of a foreign EU

[1016] CJ 12 June 2014, Joined cases C-39/13, C-40/13 and C-41/13, *Inspecteur van de Belastingdienst Noord/kantoor Groningen v SCA Group Holding BV (C-39/13), X AG, X1 Holding GmbH, X2 Holding GmbH, X3 Holding BV, D1 BV, D2 BV, D3 BV, v Inspecteur van de Belastingdienst Amsterdam (C-40/13) and Inspecteur van de Belastingdienst Holland- Noord/kantoor Zaandam v MSA International Holdings BV, MSA Nederland BV (C-41/13).*

link constituted a restriction to the freedom of establishment. The CJ rejected the argument that no restriction was imposed because indirect subsidiaries held by an intermediate Netherlands group company can also not be included in a fiscal unity. The decisive factor for the CJ was that, under the Netherlands regime, Netherlands companies which have a foreign company link have no possibility at all of forming a fiscal unity because the foreign company can never be part of the fiscal unity. That possibility is available to group structures in which all the companies are established in the Netherlands. In addition, the CJ also dealt with an argument specifically addressed to the second type of group structures referred to above: that under the Netherlands regime, the consolidation of the group's results always takes place at the level of the parent company, reason by which the situation of two subsidiaries with a foreign parent company could never be comparable with a pure domestic situation. The CJ rejected such argument by making reference to the fact that, as regards the aim of the fiscal unity regime – which is to treat all the companies of the group as one and the same taxpayer – that can be achieved either when the parent company of the group is a resident company or when the parent company is a non-resident company but the consolidation occurs, as in the proceedings, only at the level of the sister companies which are resident in the Netherlands.

Subsequently, the CJ went on to analyse possible justifications to the infringement of the freedom of establishment. The first justification referred to the need to preserve the coherence of the Netherlands tax system related to the prevention of double use of losses. In that regard, the Court recalled that the need to preserve the coherence of a tax system may justify a restriction on the exercise of the fundamental freedoms guaranteed by the Treaty, it is however necessary, for such a justification to be accepted, that a direct link be established between the granting of the tax advantage concerned and the offsetting of that advantage by a particular tax. By making reference to its previous judgment in *Papillon,* the Court observed that, in principle, such a direct link exists between, on the one hand, the possibility of transferring losses between the companies of a group and, on the other, the neutralisation of certain transactions between those companies, such as provisions for doubtful claims or risks, waivers of debt, subsidies, provisions for depreciation of shares and the transfer of fixed assets. In that judgment, the Court relied on the fact that, in the tax system of the Member State at issue in that case, the purpose of neutralising those intra-group transactions was to avoid the double use of losses at the level of resident companies falling under the tax integration regime, and thus preserve the coherence of that tax system.

Nevertheless, the CJ observed that the legal context of the present case was different. Article 13 of the Corporate Income Tax Act 1969 (*Wet op de vennootschapsbelasting 1969*) contains a general "holding exemption" rule, which applies to holdings larger than 5% of the capital. That rule covers all tax entities, given that they require a holding of at least 95% of the capital. As a result of the holding exemption, the profits or losses resulting from the possession, acquisition or disposal of a holding are not taken into account when determining the taxable profit of a tax entity. Therefore, it is through this general exemption — and not specific provisions for the neutralisation of

certain transactions, as in the system at issue in the case giving rise to the judgment in *Papillon* — that the Netherlands tax system seeks to prevent the double use of losses within a tax entity. Accordingly, the holding exemption mechanism is designed in such a way that a resident parent company can never take into account a loss linked to a holding in one of its subsidiaries, even when that subsidiary has its seat in another Member State. Therefore, the Court concluded that such justification could not apply as no direct link can be established between the tax advantage linked to the formation of a fiscal unity and the offsetting of that advantage by a particular tax.
Similarly, the CJ also rejected the justification based on the risk of tax avoidance as it considered that the Netherlands legislation did not have the specific objective of combating wholly artificial arrangements.

14.2.2 Cross-border groups

14.2.2.1 X Holding

The X Holding case[1017] dealt with extension of the Netherlands fiscal unity to foreign subsidiaries.[1018] X Holding BV, was a company resident in the Netherlands, which requested to be included in a fiscal unity for corporate income tax purposes with its subsidiary, a company resident in Belgium. The Netherlands tax authorities refused the fiscal unity, since the Belgian subsidiary did not met the applicable requirements, which were either being resident in the Netherlands for tax purposes, or to have a PE located in the Netherlands. X Holding BV appealed this decision as it considered that the refusal to allow a cross-border fiscal unity was incompatible with EU law.

The CJ ruled that the fact that only domestic subsidiaries may be included in a fiscal unity whereas foreign subsidiaries are excluded from such possibility, constitutes, in principle, a restriction of the freedom of establishment. However, the Court ruled that – due to the fact that the parent company is at liberty to include or exclude a subsidiary in the fiscal unity –

[1017] See CJ 25 February 2010, C-337/08 *X Holding B.V. v Staatssecretaris van Financiën*.
[1018] For an analysis of this case see*, inter alia*, Maarten F. de Wilde, "On X Holding and the ECJ's Ambiguous Approach towards the Proportionality Test", *EC Tax Review* 4 (2010), pp. 170-182, Rui Camacho Palma, "X Holding: A Flawed Judgement or yet Another Lesson in Consistency", *The EC Tax Journal*, XXX pp. 1-37, Servaas van Thiel and Vascega, "X Holding: Why Ulisses Should Stop Listening to the Siren", 50 *European Taxation* 8 (2010) pp. 334-, Servaas van Thiel, "X Holding: A Denial of Justice" in Dennis Weber & Bruno da Silva, *From Marks & Spencer to X Holding: The Future of Cross-Border Group Taxation*, Kluwer Law International BV, The Netherlands (2011), pp. 51-70, Dennis Weber, "Eight Points as to Why the X Holding Judgment is Incorrect" in Dennis Weber & Bruno da Silva, *From Marks & Spencer to X Holding: The Future of Cross-Border Group Taxation*, Kluwer Law International BV, The Netherlands (2011), pp. 25-50, Jose Manuel Calderón Carrero, "Las Pérdidas Transfronteirizas de Los Grupos de Sociedades y La Jurisprudencia del Tribunal de Justicia de La Unión Europea: Reflexiones Al Hilo de la STJUE X Holding BV", in Paulo Otero, Fernando Araújo e João Taborda da Gama, *Estudos em Memória do Prof. Doutor J.L. Saldanha Sanches, Vol. V* (2011), pp. 579-621.

acceptance of the possibility to include non-resident subsidiaries in the fiscal unity would offer the parent company the opportunity to choose freely the EU Member State in which the subsidiary's losses would be taken into account. For that reason, it considered that the refusal of a cross-border fiscal unity was justified by the need to safeguard the balanced allocation of the power to impose taxes between Member States.

As regards the proportionality of this measure the CJ analized the argument according to which for the purposes of the fiscal unity in the Netherlands resident subsidiaries are treated for tax purposes in the same way as permanent establishments. And, therefore, by way of analogy, non-resident subsidiaries could, in the context of a cross-border tax entity, be treated in the same way as foreign permanent establishments. The CJ rejected this argument considering that foreign PEs and foreign subsidiaries are not in a comparable situation as regards the allocation of the powers to tax.

14.2.2.2 Groupe Steria

In Groupe Steria[1019] the case dealt once again with the French group taxation regime and for the first the timewith the assessment of whether an individual element of the *regime d'integration fiscal* complied with the freedom of establishment. The case concerned a French company that received dividends from its subsidiaries established in France and other Member States. Under the French tax rules at issue, dividend income received from a subsidiary within the same fiscal unity was fully exempt by means of a so called add-back rule, whereas dividend income received from a subsidiary outside the fiscal unity was exempt for only 95%. As French law did not allow for the formation of a tax group in cross border situations such a full exemption was unavailable for dividends received from foreign subsidiaries. The case was brought to Court on a possible breach of the freedom of establishment. Contrarily to X Holding in this case the taxpayer did not claim extending the benefits of a tax group to a cross border situation but merely argued for the application of this specific benefit of full exemption which was only available to companies within a French tax group, that is, French subsidiaries.

The CJ ruled that the French rule that only grants a full tax exemption on dividend income if such income is received from a company belonging to the same tax group, amounted to a restriction to the freedom of establishment. Given that French parent companies cannot form a group with their foreign subsidiary companies under French tax law, the full tax exemption is effectively unavailable for dividends from subsidiaries established in other Member States.
The CJ considered this to be a restriction to the freedom of establishment that could not be justified by an overriding reason in the general interest. Notably, the CJ rejected the need to safeguard the allocation of the power to impose taxes between the Member States.

[1019] CJ, 2 September 2015, Case C-386/14, *Groupe Steria SCA v Ministere des Finances et des Comptes publics*.

According the difference in treatment caused by the French legislation concerned only incoming dividends received by parent companies and so that referred to the fiscal sovereignty of one and the same Member State. In similar fashion, the CJ also rejected the justification based on the need to safeguard the cohesion of the tax system. The Court recalled that for an argument based on such justification to succeed it is necessary to establish a direct link between the tax advantage concerned and the offsetting of that advantage by a particular tax levy to be examined in light of the objective pursued by the legislation in question. In that regard, the French government argued that the objective of the legislation at stake is to treat all the companies member of a tax group as a single undertaking with a number of establishments meaning as a consequence that all transactions within the group are disregarded for tax purposes. The CJ however considered that the consequence of being included in a tax group – that all the companies as treated as a single undertaking – does not entail any tax disadvantage for the parent company of the group while conferring the tax advantage disputed in this case by allowing a full exemption of the dividends received.

14.2.2.3 Finanzamt Linz

In case *Finanzamt Li*nz[1020] the CJ was confronted with the Austrian group taxation regime and with the differences that such regime provided between domestic and cross-border scenarios. More specifically, the case dealt with the impossibility to depreciate goodwill as regards participations in foreign companies while such benefit was available in the context of domestic holdings.

As expected the CJ confirmed that differences between domestic and cross-border group situations as regards the amortization of goodwill amount to a restriction of the freedom of establishment. Interestingly the Court focused its analysis on the particular aim pursued by the amortization of goodwill – ensure equal treatment between asset deal and share deal - as regards shareholdings, considering that both domestic and cross-border situations were comparable as regards the objective of such measure.

As regards possible justifications the Court rejected both the balanced allocation of the powers to tax and the cohesion of the tax system. Regarding the first justification the group taxation regime at stake provided for depreciation of goodwill irrespectively of whether the company in which the holding is acquired makes a profit or loss. Therefore and since the granting of the advantage was not related with taxing profits or losses there was no issue as regards the allocation of the powers to tax.
Concerning the cohesion of the tax system the Court rejected the existence of a direct link between the tax advantage concerning in the depreciation of the good will and the tax attribution to the parent company of the results of the resident group members. First of all considering the fact that the advantage of goodwill depreciation was granted irrespectively

[1020] CJ 6 October 2015, case C-66/14 *Finanzamt Linz v Bundesfinanzgericht, Außenstelle Linz*.

of profits or losses of the subsidiaries. Furthermore the possible taxation of capital gains upon a future sale does not amount to a direct link between the granted advantage and the disadvantage deriving from the taxation. The lack of such direct link arises since the advantage from the goodwill depreciation is immediate for the parent company head of the tax group while the disadvantage is uncertain and remote in particular considering that the participations in group members are typically not acquired for immediate subsequent sale.

Finally, the CJ stressed that the group taxation regime at stake provided the option for foreign participations to be subject to tax (instead of benefiting from the participation exemption regime). Even in that case, the depreciation of goodwill would be denied for foreign participations.
Therefore the Court confirmed that the Austrian legislation breached the freedom of establishment.

14.2.3 PE situations: Differences in treatment due to legal form

14.2.3.1 Philips Electronics UK

The possibility to include a domestic PE within a group perimeter based on the breach of the freedom of establishment may be recognized in the CJ reasoning in the *Philips Electronics* case.

The *Philips Electronics* case[1021] dealt with the situation involving a PE located in the same State of the subsidiary.[1022] In concrete terms, it referred to the application of the UK group relief system between a subsidiary and a UK PE held through a foreign link. Philips Electronics, a company resident in the UK ("Philips Electronics UK"), made various consortium claims for group relief regarding the losses incurred by a UK branch of the Netherlands company, LG Philips Display Netherlands BV. The UK tax authorities refused such group relief based on the fact that: (i) the link companies were not resident in the UK nor had a PE in the UK, and (ii) that those UK losses had already been, in principle, taken into account in the Netherlands and therefore, the condition under UK legislation – that the losses can only be surrendered in the case they are not deducted elsewhere in any State outside the UK it being insufficient that relief available overseas has not in fact been claimed– was not satisfied.

[1021] See CJ 6 September 2012, C-18/11 *The Commissioners for Her Majesty's Revenue & Customs v Philips Electronics UK Ltd*.
[1022] See *inter alia*, Timothy Lyons "Philips Electronics UK Ltd v HMRC: More unjustifiable restrictions on loss relief", *British Tax Review* 1 (2010), pp. 46-54, Rupert Shiers," Philips Electronics UK Ltd v. HMRC: Host State Restrictions and Use of Host State Losses", in Dennis Weber & Bruno da Silva, *From Marks & Spencer to X Holding: The Future of Cross-Border Group Taxation*, Kluwer Law International BV, The Netherlands (2011), pp. 109-124.

There were therefore two issues regarding the discussion about the personal scope: (i) one concerning the application of the UK group relief due to the existence of a foreign link; and (ii) the inability to claim loss relief by an UK PE whereas such claim could have been made in case of an UK subsidiary. The first question was dealt exclusively at the national level with no appeal on that issue to the CJ.[1023] The UK domestic Court considered that this situation was materially identical to the situation already dealt with by the CJ in the *Papillon* case and therefore the inability for loss relief due the existence of non-UK linked companies amounted to a restriction of the freedom of establishment.

The second issue (first question dealt by the CJ) was whether the abovementioned condition - of non-deductibility of the losses elsewhere - which was only applicable in cross-border situations constituted a breach of the freedom of establishment. The CJ considered that the different treatment provided to foreign companies with a PE in UK in comparison with UK subsidiaries constituted a restriction on the freedom of choosing the appropriate legal form of secondary establishment. The CJ further added that a resident company and a non-resident company that operates domestically through a PE were in objectively comparable situations as concerns the possibility of transferring group relief losses. Therefore, it concluded that the condition under UK law regarding group relief in relation to companies established in a Member State other than the UK constituted a restriction on the freedom of establishment.

The CJ then when on to analyse possible justifications: whether the restriction established above could be justified either by the need to safeguard the balanced allocation of taxing rights or the prevention of double use of losses or both. The CJ answered this question in the negative. Regarding the balanced allocation of taxing rights, it pointed out that the power of taxation enjoyed by the UK with regard to the taxpayer's income was not impaired by the surrender of the losses. Only losses that were incurred within the scope of the power of taxation of the UK were to be surrendered under the group relief requested by Philips Electronics UK. All the transactions at issue in the present case are subject to the fiscal jurisdiction of the UK: domestic losses of a domestic taxable person (LG Philips Display Netherlands BV with regard to its permanent establishment in the UK) are intended to be credited against domestic profits of another domestic taxable person (Philips Electronics UK). The CJ highlighted the difference between the situation at hand and losses sustained in another Member State; in the latter case, the symmetry between the right to tax profits and the right to deduct losses would not be safeguarded.
Regarding the dual use of losses, the CJ ruled that, even if it could be considered independently, it could not be accepted as a justification in the present case. In this respect it referred to the fact that the double use of losses had no effect on the power of the UK to

[1023] See also the Opinion of AG Kokott in case C-18/11 *The Commissioners for Her Majesty's Revenue & Customs v Philips Electronics UK Ltd,* delivered on 19 April 2012, footnote 4 confirming that the court in the main proceedings considered that the requirement of a domestic link constituted a prohibited restriction to the freedom of establishment which was a undisputed finding.

tax the permanent establishment. Such power is not affected by the possibility that the losses could be used in the Netherlands. As regards the combination of these two justifications, the Court also rejected such possibility with reference to the arguments stated above.

The last question dealt with by the Court related to the legal consequences of the prohibition of the restriction. The background to this question is the fact that in the present case only LG Philips Display Netherlands BV had exercised the freedom of establishment granted by Article 49 TFEU. The freedom of establishment of Philips Electronics UK, which claimed an entitlement to group relief in the main proceedings, is not restricted. Rather it suffers because the freedom of establishment of its contracting partner, from which it wishes to assume the losses in return for a payment, is restricted under the UK tax rules. The question was then whether Philips Electronics UK would nevertheless be able to benefit from the prohibition under Article 49 TFEU. The Court concluded in the affirmative by considering that in order to be effective, the freedom of establishment must also entail the possibility that Philips Electronics UK can benefit from the group relief by setting it off against its profits.

14.2.4 Cross-border losses

14.2.4.1 Futura Participations

The *Futura Participations* case[1024] dealt with a company with its seat in France which carried on an activity in Luxembourg through a PE located there. As the PE was profitable while the head office had incurred into losses, Futura Participations intended to offset for tax purposes the losses of the French head office against the profits of the PE generated in Luxembourg. That request was rejected based on the fact that, according to Luxembourg law, the deduction of losses of a PE had to be economically linked to the income generated in Luxembourg. Futura Participations appealed against this denial based on the breach of the freedom of establishment. However, the CJ considered that the Luxembourg system according to which, for determining the basis of assessment of non-resident taxpayers only profits and losses arising from their Luxembourg activities can be taken into account in calculating the tax payable in that State, was in conformity with the principle of territoriality and did not constitute a prohibited discrimination.[1025]

In conclusion the CJ considered that in situations where a PE generates a profit while the taxpayer suffers a loss in his Home State, the source State where the PE is located in not obliged to take into account the foreign losses regarding the taxation of the PE.

[1024] ECJ 15 May 1997, C-250/95 *Futura Participations and Singer v. Administration des Contributions*.
[1025] ECJ 15 May 1997, C-250/95 *Futura Participations and Singer v. Administration des Contributions*, paras. 22-23.

14.2.4.2 AMID

AMID[1026] was a Belgian company with a PE located in Luxembourg. Pursuant to the Double Tax Treaty entered into between Belgium and Luxembourg, the profits of the Luxembourg PE were tax exempt in Belgium. Briefly, Belgium applied its worldwide taxation system with exemption based on a two-step approach: first all the worldwide profits and losses were aggregated in order to determine the tax base and second the exempt foreign profits under the tax treaty were deducted from the tax base. In the first moment – aggregation level – the Belgian loss could be set against foreign profit, being such set off should occur by priority order against foreign exempt profit pursuant to a tax treaty.[1027] Therefore, a Belgian loss ended up being compensated with a profit which was, in any event, taxed in Belgium with the result of reducing the domestic losses to be carried-forward against future Belgium profits.

In 1981, AMID suffered a loss in Belgium whilst its Luxembourg PE realized a profit. Differently, in 1982, AMID realised a profit in Belgium. Under Luxembourg tax law, it was not possible for AMID to set off the Belgian loss against its Luxembourg profits. Therefore, AMID claimed the deduction of its loss suffered in 1981 against the profits realised in the following year. The Belgian tax authorities denied such claim based on the argument that the loss of 1981 should have been offset against the profits occurred in Luxembourg in the same year. The taxpayer claimed[1028] that such denial constituted a breach of the freedom of establishment. In the case of a Belgian company with a Belgian PE, it would be possible to set off the losses incurred in a previous tax year. Therefore, a Belgian company with a PE in another Member State would be placed at a disadvantage when compared with a pure domestic scenario. The Belgian Government argued that the legislation at issue in the proceedings should have been analyzed in its "overall context".[1029] While it was true that in the specific situation under examination there was a disadvantage for AMID in a different scenario there could be an advantage when compared with pure domestic situations. This would be the case of profits obtained in Belgium and a loss made by the PE in Luxembourg. In that situation, the amount of tax in Belgium would be diminished and the loss could still be set off in Luxembourg against future profits. In addition, the Belgium Government argued that domestic situations could not be compared with cross-border situations as in the first situation, all the income would be calculated and taxed at the rate

[1026] ECJ 19 December 2000, C-141/99 *Algemene Maatschappij voor Investering en Dienstverlening NV (AMID) v Belgische Staat*.

[1027] ECJ 19 December 2000, C-141/99 *Algemene Maatschappij voor Investering en Dienstverlening NV (AMID) v Belgische Staat,* paras. 3-4.

[1028] For comments on this case, see Luc Hinnekens, "AMID: The Wrong Bridge or a Bridge Too Far? An Analysis of a Recent Decision of the European Court of Justice", European Taxation 6 IBFD (2001), pp. 206-210 or Frank Engelen, "De voorlichting van het Hof van Justitie van de Europese Gemeenschappen in fiscale Zaken", *Tijdschrift voor Fiscaal Ondernemingsrecht*, 2001, pp. 117-121.

[1029] See ECJ 19 December 2000, C-141/99 *Algemene Maatschappij voor Investering en Dienstverlening NV (AMID) v Belgische Staat,* para. 24.

applicable in Belgium. Differently, in the case of Belgian companies with a foreign PE the income of the PE would be taxed in accordance with the rules of the Member State where that PE is situated subject to the limitations under the applicable Double Tax Treaty.
The CJ rejected both these arguments. Regarding the first argument it affirmed that a discriminatory treatment in a particular situation could not be compensated by the more favourable treatment afforded in other situations.[1030] As regards the second argument, the CJ concluded that the differences between domestic and cross-border situations could in any event explain the different treatment as regards the deduction of losses.[1031]

14.2.4.3 Marks & Spencer

Marks & Spencer plc was a company incorporated and resident in the UK for tax purposes.[1032] In order to internationalise its activity to be recognised as an international retailer, as from the second half of the 1970s it began to move into overseas jurisdictions. By the end of the 1990s, it was present in more than thirty-six countries with most of the overseas operations ultimately being owned via a Netherlands holding company. In the second half of the 1990s, a trend started to develop of rising losses in its Continental Europe activities. That led to a divestment of Marks & Spencer activities, reason by which by 31 December 2001, the French and Spanish subsidiaries had already been sold to third parties and the activities of the remaining subsidiaries had been discontinued – including the German and Belgian companies.

The case[1033] concerns the claim for UK group relief in respect of the losses incurred by Marks & Spencer for the four accounting periods ending 31 March 1998, 1999, 2000 and 2001 by its subsidiaries located in Belgium, France and Germany.[1034] That claim was denied by the UK Revenue since the foreign subsidiaries were not resident in the UK nor did they carry on a trade in the UK through a branch of agency. In fact, had Marks &

[1030] ECJ 19 December 2000, C-141/99 *Algemene Maatschappij voor Investering en Dienstverlening NV (AMID) v Belgische Staat,* para. 27.
[1031] ECJ 19 December 2000, C-141/99 *Algemene Maatschappij voor Investering en Dienstverlening NV (AMID) v Belgische Staat,* para. 28.
[1032] See ECJ 13 December 2005, C-446/03 *Marks & Spencer plc v David Halsey (Her Majesty's Inspector of Taxes).*
[1033] For comments on this case see, *inter alia*, G. Meussen, "The Marks & Spencer case: Reaching the Boundaries of the EC Treaty" *EC Tax Review* 3 (2003), pp. 144-148, D. Gutmman, "Marks & Spencer case: proposals for an alternative way of reasoning" *EC Tax Review* 3 (2003), pp. 154-158, Julian Ghosh, "The Marks & Spencer Case: A Prediction of the ECJ's Holding", 38 *Tax Notes International*, pp. 33-43, Ingmar Doerr, "A Step Forward in the Field of European Corporate Taxation and Cross-Border Loss Relief: Some Comments on the Marks & Spencer case", 32 *Intertax* 4 (2005), pp. 180-186, Philip Martin, "The Marks & Spencer EU group relief case – a rebuttal of the "taxing jurisdiction" argument", *EC Tax Review* 2 (2005), pp. 61-68, M. Lang, "Marks & Spencer -More questions than answers: an analysis of the opinion delivered by AG Maduro" *EC Tax Review* 2 (2005), pp. 95-100, Timothy Lyons, "Marks & Spencer: striking a balance", *British Tax Review* 3 (2005), pp. 251-260.
[1034] The claims were: in the case of Germany for the four years, France the years from 1999 to 2001 and Belgium the years of 2000 and 2001.

Spencer established either: (i) a domestic subsidiary; (ii) a foreign branch; or (iii) a foreign subsidiary but with a UK branch, the UK group relief system would have applied. That is because the profits and losses would be within the scope of UK tax law. However, according to the Revenue's arguments, since foreign subsidiaries were at stake, the loss relief was not available: if the UK did not tax the profits of those companies, should it also not have to give relief for their losses.
Marks & Spencer plc brought action against the UK on the grounds that the inability to make use of the foreign subsidiaries' losses constituted an infringement of its right of establishment set forth in Article 43 EC (currently Article 49 TFEU). The UK Special Commissioners decided against Marks & Spencer since the foreign subsidiaries – being outside of the scope of UK tax – were not in an objectively comparable situation to a UK subsidiary – which is within the scope of UK tax in respect of its world-wide activities. Therefore, the fact that a different rule was applied to different situations did not constitute a restriction to the freedom of establishment. Marks & Spencer appealed to the High Court, which in turn, referred the case to the Court of Justice.

In its judgment,[1035] the Court started by considering that the UK legislation, by not allowing foreign subsidiaries established in another Member State to benefit from the advantage of the group relief constituted a restriction to the freedom of establishment.[1036]
It then went on to analyse if such restriction could be justified by relevant objective elements. In that regard, it considered that the non-application of the UK group relief system to foreign subsidiaries could be based on three justifications "taken together":[1037]

1) *Balanced allocation of the powers to tax* among Member States, since profits and losses are two sides of the same coin and should be treated symmetrically. In that regard such balance would be jeopardised if the taxable base could be increased in one Member State and reduced in the other Member State to the extent of the losses transferred.
2) *Prevention of double use of losses* both in the state of the subsidiary and in the State of the parent company.
3) *Tax avoidance*, due to the possibility to transfer the losses to the companies established in the Member State, which apply the highest tax rates.

[1035] For further analysis of the decision see, *inter alia*, Michael Lang, "The Marks & Spencer case: The Open Issues Following the ECJ's Final Word, 46 *European Taxation* 2 IBFD (2006), pp. 54-67, T. Lyons, "Marks & Spencer: Something for everyone?", *British Tax Review* 1 (2006), pp. 9-14, Melchior Wathelet, "Marks & Spencer plc vs Halsey: Lessons to be drawn, *British Tax Review* (2006) pp. 128-134, P.J. Wattel, Note on Case C-446/03, Marks & Spencer II plc v. David Halsey (Her Majesty's Inspector of Taxes), *BNB* 2006/72c, A. Cordewener and I. Doerr, "Casenote on Marks & Spencer" 43 *Common Market Law Review*, pp. 855-, Mathieu Isenbaert and Caroline Valjemark, "M&S judgment: the ECJ caught between a rock and a hard place", *EC Tax Review* 1 (2006), pp. 10-17, Tom O'Shea, "Marks & Spencer v Halsey (HM Inspector of Taxes): Restriction, Justification and Proportionality*" EC Tax Review* 5 (2006), pp. 66-82.
[1036] See ECJ 13 December 2005, C-446/03 *Marks & Spencer plc v David Halsey (Her Majesty's Inspector of Taxes)*, paras. 32-34.
[1037] See ECJ 13 December 2005, C-446/03 *Marks & Spencer plc v David Halsey (Her Majesty's Inspector of Taxes)*, para. 51

But the most relevant part of such decision was, in the end, the proportionality test. The Court accepted that the UK denial of cross-border loss relief was in principle a proportional measure,[1038] with one exception. That exception was based on the difference drawn by the Court between temporary and final losses. The CJ considered that only in this last case – where the foreign subsidiary has exhausted the possibilities, there was no possibility of using those losses in the subsidiary's Member State – the Member State of the parent company would have to allow the offsetting of the cross-border losses.

14.2.4.4 Oy AA

In the *Oy AA*[1039] case[1040] the Court was confronted with the question whether the Finnish group contribution system was in line with the freedom of establishment. The group contribution regime operates by transferring a contribution (a profit) from a profit-making company to a company of the group which carries losses. The group contributions are considered as a tax deductible expense of the contributing company and taxable income of the recipient company. Overall this scheme allows mitigating the tax liability of the profit-making members of the group through the transfer of part of its tax base to loss-making members of such group. The case had the interesting feature as it was based on a group taxation regime which was the reverse situation of the UK group relief system Oy AA was a company resident in Finland which was 100% indirectly owned by AA Limited, a company resident in the UK. Contrary to OyAA Limited which had incurred losses, Oy AA was a profitable company. In that regard, it considered to make an intra-group transfer of its profits to its UK parent company.
Oy AA claimed that such intra-group transfer should be considered a tax deductible expense in Finland, but such claim was denied by the Finnish tax authorities based on the argument that OyAA was a non-resident company. Oy AA appealed against such decision on the grounds that the non-deduction of the intra-group transferred profits by the fact that the receiving was not a company resident in Finland constituted an infringement to the freedom of establishment.

It came as no surprise that the CJ found once again a restriction to exist. In that regard, the Court looked at the purpose of the Finnish group tax regime that is to remove tax

[1038] Although both Marks & Spencer and the Commission argued the possibility of adopting less restrictive measures – notably a deduction-recapture rule – the Court considered that the adoption of such other measures would require "harmonisation of the Community rules". See ECJ 13 December 2005, C-446/03 *Marks & Spencer plc v David Halsey (Her Majesty's Inspector of Taxes)*, paras. 54 and 58.
[1039] See, *inter alia*, Marjaana Helminen, "Freedom of Establishment and Oy AA", 47 *European Taxation* 11 (2007), pp. 490-497, Graham Airs, "Oy AA - limitations on transfers of profits to domestic situations not precluded by the EC Treaty" *British Tax Review* 5 (2007), pp. 597-604, Daniel Gutmann, "Taxation of groups of companies: lessons to be drawn from Oy AA", 9 *Tax Planning International Transfer Pricing* 3 (2008), pp. 9-11.
[1040] See ECJ 18 July 2007, C-231/05 *Oy AA*.

disadvantages inherent in the structure of a group of companies by allowing a balancing out within a group that comprises both profit-making and loss-making companies. Such aim did not differ in a domestic or cross-border situation. Therefore, the CJ considered that based on such aim[1041] the position of a resident parent company – subject to tax – and a non-resident parent company – not subject to tax – was not incomparable. It concluded that the different treatment provided based on the seat of the parent company constituted a restriction to the freedom of establishment.[1042]

After finding a restriction, the Court went to analyse whether the Finnish measure was justified. At the level of the justifications, the Court was of the view that, by a combination of two factors – the balanced allocation of the powers to tax between Member States and tax avoidance – the Finnish tax system pursued legitimate objectives compatible with the Treaty and justified by overriding reasons in the public interest.

With regard to the third factor, which had been previously used in *Marks & Spencer*, related to risk that losses may be used twice, the Court found it sufficient to state that it would not be of relevance in the case since the Finnish system of intra-group transfers did not concern the deductibility of losses.[1043] Finally, the conclusion was also that the Finnish legislation was proportionate to the objectives pursued as a whole.

14.2.4.5 Rewe Zentralfinanz

This case[1044] dealt with the German tax legislation regarding the deduction for tax purposes of partial write-downs to the value of shares in a company. In the case of shares held in German companies, it was possible to deduct the write-downs against all the positive income generated by the taxpayer while deduction of write-downs of participations in foreign subsidiaries was limited to income of the same kind and generated in the same foreign State. Rewe Zentralfinanz had a participation in a Netherlands holding company which in turn held two second-tier subsidiaries in UK and in Spain. Due to losses incurred by these second-tier subsidiaries, Rewe Zentralfinanz wrote down the book value of its participation in the Netherlands intermediary holding company and deducted the corresponding amounts from its corporate income tax concerning the years 1993 and 1994. Those deductions were denied by the German tax authorities and challenged by Rewe Zentralfinanz which alleged that the limitations regarding foreign participations breached the freedom of establishment and the free movement of capital.[1045]

[1041] See ECJ 18 July 2007, C-231/05 *Oy AA*, para. 38.
[1042] See ECJ 18 July 2007, C-231/05 *Oy AA*,, para. 39.
[1043] See ECJ 18 July 2007, C-231/05 *Oy AA*, para. 57.
[1044] See ECJ 29 March 2007, C-347/04 *Rewe Zentralfinanz eG v Finanzamt Koln-Mitte*.
[1045] The German limitations regarding the write-down on the value of shares of foreign participations would be subject to further scrutiny by the CJ in two subsequent cases, in which the Court found those limitations to be in breach of the fundamental freedoms. See cases ECJ 22 January 2009, C-377/07 *Finanzamt Speyer-*

The CJ considered that the German legislation was indeed restrictive to the freedom of establishment as it led to a less favourable treatment of German companies with foreign subsidiaries to the one applicable to German companies with domestic subsidiaries. Regarding the possible justifications, the CJ rejected all the arguments of the German government. In particular, it considered that an argument based on the balanced allocation of the power to impose taxes between the Member States could not justify that Germany would systematically refuse to grant a tax advantage to a resident parent company, on the ground that that company has developed a cross-border economic activity which does not have the immediate result of generating tax revenues in that State. Similarly, the CJ also rejected a justification based on the danger of double use of losses[1046] because the write-down of the value of the participation and the losses incurred by the subsidiaries referred to two different types of losses and not to the dual use of the same incurred loss. Therefore, the writing down of the book value of the shareholdings was taken into account only regarding the parent company and were subject, for tax purposes, to a different tax treatment from that which applies to the losses incurred by the subsidiaries. The Court also ruled[1047] that the German legislation could not be justified by the need to prevent the risk of tax avoidance, because its scope of application was too broad to be considered as targeting purely artificial arrangements as it applied to any situation in which subsidiaries were established abroad. It stressed that the formation of a company outside a Member State does not, of itself, imply the existence of tax avoidance, since the company in question is, in any event, subject to the tax legislation of the State in which it is established. Therefore, it concluded that the German restrictive legislation was disproportionate.

14.2.4.6 Deutsche Shell

The *Deutsche Shell* case[1048] dealt with a German resident company that set up a PE in Italy and injected between 1974 and 1991 start-up capital in such PE in Italian liras. The depreciation of the value of the start-up capital granted to the PE was not taken into account in Italy for the taxation of the profits, since the basis of the assessment was, naturally, in Italian liras. In 1992, Deutsche Shell transferred the assets of its PE to an Italian subsidiary therefore putting an end to such PE. On the same day the Italian subsidiary was also sold. The amount of lira obtained as a result of the above referred transactions was paid to Deutsche Shell as reimbursement of the start-up capital. The conversion of the amount received into Deutsche marks revealed a negative difference regarding the amount of start-up capital repaid and the one originally injected. Deutsche Shell regarded such negative difference as a currency loss, deductible for tax purposes. However such deduction of the currency losses in Germany regarding its Italian PE was denied based on the profits

---

Germersheim v STEKO Industriemontage GmbH; or ECJ 17 September 2009, C-182/08 *Glaxo Wellcome GmbH & Co. KG v Finanzamt Munchen* II.

[1046] See ECJ 29 March 2007, C-347/04 *Rewe Zentralfinanz eG v Finanzamt Koln-Mitte*, paras. 47-48.

[1047] See ECJ 29 March 2007, C-347/04 *Rewe Zentralfinanz eG v Finanzamt Koln-Mitte*, paras. 51-52.

[1048] ECJ 28 February 2008, C-293/06 *Deutsche Shell GmbH v Finanzamt für Großunternehmen in Hamburg*.

exemption provided in the DTC Germany/Italy. Deutsche Shell argued that such denial was a restriction to the freedom of establishment since it had been placed in a worse position than if the start-up capital had been invested in a company established in Germany.

The CJ considered that the German tax system constituted an obstacle to the freedom of establishment since it increased the economic risks incurred by a company established in one Member State wishing to set up a body in another Member State where the currency used is different from that of the State of origin. Such restriction was considered as not justified since the currency losses referred to a specific operational factor which could only be taken into consideration in Germany. In other words, the Court concluded that it was unacceptable for a Member State to exclude from the basis of assessment of the principal establishment currency losses which, by their nature, can never be suffered by the PE but can only be taken into account in the Home State. Therefore, it rejected the arguments raised by Germany that the tax measure at stake would be justified by the need to preserve the coherence of the tax system and the balanced allocation of powers to tax among Member States.

14.2.4.7 Lidl Belgium

In *Lidl Belgium,*[1049] the CJ was confronted with the question of possible deduction of cross-border losses incurred by a foreign PE. Lidl Belgium was a German limited partnership which developed its overseas activities through, inter alia, a PE located in Luxembourg. During the year 1999, that PE incurred into losses. For the purposes of calculating its taxable income in Germany, Lidl Belgium deducted the loss incurred in Luxembourg. Such deduction was denied by the German tax authorities based on the allocation of taxing rights provided in the applicable Tax Treaty: the profits of a German resident company taxed in Luxembourg were exempt in Germany and consequently incurred losses could also not be deducted in that Member State.

Similar to the previously referred cases, the CJ found a restriction to the freedom of establishment to exist since a German company with a PE in another Member State would be treated less favourably than in the case such PE would be established also in Germany. That was due to the fact that in a cross-border situation, the tax advantage related to the possibility to deduct the losses incurred by the PE at the level of the head office was not available.[1050] Following the findings that the German legislation restricted Article 49 TFEU, the Court went on to analyse possible justifications. It considered that the German provisions were, in principle, justified in the light of the need to safeguard the allocation of the power to tax between the Member States and the need to prevent the danger that the same losses would be taken into account twice

[1049] See ECJ 15 May 2008, C-416/06 *Lidl Belgium GmbH & Co. KG v Finanzamt Heilbronn*.
[1050] See ECJ 15 May 2008, C-416/06 *Lidl Belgium GmbH & Co. KG v Finanzamt Heilbronn*, paras. 23-25.

Turning to the issue of proportionality, the Court confirmed the *Marks & Spencer* reasoning in the sense that only in the case of final losses would the impossibility of deduction at the level of the head office not be considered proportionate,[1051] That was not the case of Lidl Belgium since it would be possible to carry forward those losses locally at the level of the PE.[1052]

14.2.4.8 A Oy

In the *A Oy* case,[1053] the Court dealt with the compatibility of Finnish rules on the deductibility of losses upon a cross-border merger with the freedom of establishment provided in Articles 49 and 54 TFEU.
A Oy was a Finnish resident company which held all the shares in the Swedish company B AB. This subsidiary company had ceased its trading activities and incurred losses for the period from 2001 to 2007. The Finnish company planned a merger with its Swedish subsidiary, which would result in the dissolution of such subsidiary and the acquisition of all its assets by the taxable company. Under Finnish legislation, upon a merger of companies, the receiving company shall have the right to deduct from its taxable income any loss made by the merged entity, provided certain conditions are met. Such possibility is excluded, however, with regard to losses from business activity which is not subject to Finnish taxation (foreign accumulated losses). The first question dealt with by the CJ was whether the abovementioned limitation in cross-border situations constituted a breach of the freedom of establishment. The CJ considered that the possibility granted by Finnish law to a resident parent company of taking a resident subsidiary's losses into account when it merges with that subsidiary constitutes a tax advantage for the parent company. The fact that it was not possible to take over the losses of a foreign subsidiary makes it less attractive to set up subsidiaries in another Member State. The CJ considered that, looking to the aim pursued by the national provisions at stake – allow the parent company to benefit from a tax advantage consisting in being able to deduct from tax the losses incurred by the subsidiary – makes domestic and cross-border situations objectively comparable. The difference in treatment by the Finnish tax legislation constitutes a restriction to the freedom of establishment. Turning to the analysis of the possible justifications, the CJ confirmed that such restriction was, in principle, justified based on three justifications taken together: balanced allocation of the powers to tax, prevent the double use of losses and tax avoidance. Still, the Court went on to examine whether the legislation at stake goes beyond what is necessary to attain those objectives. In that regard, the CJ re-called it is previous case law which considered that a piece of legislation is not considered proportional in he case the non-resident subsidiary has exhausted the possibilities available in its State of residence of having the losses taken into account. In that event, it is up to the parent company to demonstrate whether the subsidiary has exhausted all the possibilities of taking

[1051] See ECJ 15 May 2008, C-416/06 *Lidl Belgium GmbH & Co. KG v Finanzamt Heilbronn*, para. 48.
[1052] See ECJ 15 May 2008, C-416/06 *Lidl Belgium GmbH & Co. KG v Finanzamt Heilbronn*, paras. 50-51.
[1053] See ECJ 21 February 2013, C-123/11 *A Oy*.

account of the losses which existed in Sweden. Therefore, the Court concluded that the Finnish legislation is incompatible with EU law to the extent that it does not allow the parent company the possibility of showing that its non-resident subsidiary has exhausted the possibilities of taking those losses into account and that there is no possibility of their being taken into account in its State of residence in respect of future years. either by itself or by a third party.
The other question dealt with by the CJ concerned the calculation of the loss and whether it should be calculated in accordance with the rules of the State of residence of the parent company or that of the subsidiary. According to the Court, in the present status of EU law, the freedom of establishment, in principle, does not imply the application of a particular law to the calculation of the losses. Nevertheless, the CJ stated that the applied method must not lead to unequal treatment compared with the calculation that would have been made in a similar case for the taking over of the losses of a resident subsidiary.

14.2.4.9 Commission v UK

In case *Commission v UK,*[1054] the Court dealt with an infringement procedure concerning the alleged improper implementation of the *Marks & Spencer* reasoning. Following the CJ ruling in *Marks & Spencer*, the UK amended its legislation for the purposes of allowing cross-border group relief, subject to certain conditions. First, a material requirement: that the non-resident company must have exhausted all possibility of having the losses taken into account in the accounting period in which the losses were incurred or in previous or future accounting periods. Second, a temporal requirement that the determination as to whether the losses may be taken into account in future accounting periods has to be made immediately after the accounting period in which those losses were incurred. According to the Commission, this latter requirement was excessively restrictive making it virtually impossible to obtain cross-border loss relief since it limits it to two situations: (i) where the legislation of the Member State of residence of the subsidiary concerned makes no provision for losses to be carried forward, and (ii) where the subsidiary is put into liquidation before the end of the accounting period.

Therefore, the Commission brought the UK to Court based on a possible breach of the freedom of establishment.

The CJ considered that the UK legislation materially meets the conditions of *Marks & Spencer*: it allows definitive losses incurred by a non-resident subsidiary to be taken into account by the resident parent company.
As regards the first situation in which the legislation precludes all possibility to carry-forward losses, the Court considered that such fact does not oblige a State to take into account foreign losses. As regards the situations involving liquidations, the Court considered that the *Marks & Spencer* exception was not jeopardized by the current existing

[1054] CJ 3 February 2015, C-172/13 *European Commission v UK*.

UK legislation. In addition, the CJ stressed that the losses can only be characterized as definitive in the case the subsidiary does not obtain any income, even if minimal, as otherwise there are still possibilities that the losses sustained may be offset by future profits in the respective state of residence.

14.2.4.10 X AB

The case *X AB,*[1055] dealt with the Swedish legislation that precluded the deduction of currency losses resulting from the disposal of holdings for business purposes in a foreign subsidiary. During the year 2003, X AB, which has its seat in Sweden, formed a subsidiary in the United Kingdom, Y Ltd, whose shares were issued in US dollars. After subsequent capital contributions, X AB held approximately 45% of the shares in Y Ltd in the form of capital and of voting rights. AB, wishing to put an end to Y Ltd's activities, planned to transfer those shares. This transaction, however, presented a risk of currency loss owing to the fact that, between the years 2003 and 2009, X AB had contributed capital, in cash, to Y Ltd at an exchange rate more favourable than that existing at the time of the transfers. X AB planned to deduct those currency losses but was confronted with the Swedish legislation in accordance with which, capital losses on "holdings for business purposes" are not, in principle, deductible from the basis of assessment for corporation tax. X AB requested a ruling from the Skatterättsnämnden (Revenue Law Commission) on whether such exclusion was compatible with EU law. The Skatterättsnämnden replied in the negative, on the grounds that, in Swedish law, neither capital gains nor capital losses on the shares constituting "holdings for business purposes" are, in principle, taken into account in the calculation of the basis of assessment for corporation tax.

The CJ was confronted with the issue whether the impossibility to deduct currency losses constituted a restriction to the freedom of establishment. The CJ observed that under Swedish law, capital losses on the transfer of "holdings for business purposes" having their origin in a currency loss cannot be deducted either in the situation in which, the shares are held in a company established in another Member State or in that in which they are held in a company established in Sweden — whether the capital of the latter be denominated in Swedish Crown or in any other currency permitted by the national legislation. As a consequence, according to the CJ, investments in "holdings for business purposes" in a Member State other than Sweden are not, having regard to the non-deductibility of currency losses, treated more unfavourably than similar investments effected in Sweden. For the Court it was significant that, under Swedish law it was in principle indifferent the results of capital transactions on "holdings for business purposes", irrespective of being in respect of domestic or foreign holdings as Sweden had chosen, as a general rule, not to exercise its powers of taxation at all. Therefore, the CJ concluded that the Swedish law does not restrict the freedom of establishment.

[1055] CJ 10 June 2015, C-686/13 *X AB v Skatteverket*.

14.3 Interim conclusions

The CJ case law on the application of the EU fundamental freedoms to group taxation regimes has dealt already with different types of situations. From addressing a broader question of whether a domestic group taxation regime should be extended to cross-border situations, to different other situations involving the definition of the group perimeter, and also the possibility of extending specific benefits in an intra-community context.

The issue of transfer of losses within a cross-border context is likely the most significant one. Clearly because the decision in Marks & Spencer constitutes undoubtedly one of the most important decisions of the Court concerning direct tax matters and set the precedent for subsequent case-law.

But essentially because the decision in that statement and the statement of the Court when performing its proportionality test and setting the conditions under which Member States are obliged to import foreign losses[1056]gave rise to all sorts of different types of questions as outlined below:[1057]

1. *Application in case of other group taxation regimes* - Would the no-possibilities test apply to all different types of group taxation regimes, like consolidation regimes, pooling regimes or group contribution regimes? Or would it apply only to group relief regimes similar to the ones within the UK?
2. *Flow of income between tax group members* - Would it apply irrespectively of who was the contributing and the receiving company? In Marks & Spencer it was the losses of the subsidiary which were surrendered to the parent company, but would it apply for instance the other way around, from the parent company to the subsidiary? And what about between sister companies resident in different Member States, would it also be possible?
3. *Final losses*
    a. *Meaning* - What was indeed a final loss? What are the conditions or when does it become final? How to deal with the differences regarding these concepts between the Member State of the subsidiary and the Member State of the parent company? Which should prevail?

[1056] For a discussion of the issues surrounding the implementation of the no-possibilities test in the UK, see the contribution of Paul Farmer & Allison Last "The Final Losses-Exception in *Marks & Spencer"* in Dennis Weber & Bruno da Silva (eds.), *From Marks & Spencer to X Holding: The Future of Cross-Border Group Taxation*, Kluwer Law International BV, The Netherlands (2011), pp. 95-108. For a discussion in general on the no-possibilities test see 17.4 *infra*.

[1057] See Sjoerd Douma and Carolina Naumburg, "Marks & Spencer: Are National Tax Systems Éclaire, *European Taxation* 9 (2006), pp. 431-442, Gert-Jan Vossestein, "Exit Restrictions on Freedom of Establishment after Marks & Spencer, *European Business Organization Law Review* 7, pp. 863-878, Claus Staringer, "Where Does Foreign Loss Utilization Go in Europe?", *SWI* (2007), pp. 5-11, Christiana H.J.I. Panayi, 'Reverse Subsidiarity and EU Tax Law: Can Member States Be Left to Their Own Devices?', *British Tax Review* 3 (2010), pp. 279–281.

b. *Calculation* - Was there a need to re-calculate the losses under the local law where the deduction is being claimed (in case the UK)? And how to deal with the mismatches (e.g., different timing issues, depreciation rules, etc.) since there is no common tax base within the EU?
c. *Application* - Should all the losses (irrespective of the year in which they occurred) be deducted in the tax year in which the claim for deduction was being claimed or, differently, they should be segregated and retroactively deducted in the years which they occurred?

4. *Cash-flow disadvantages* - Why did not the ECJ consider the issue regarding cash-flow disadvantages that would arise due to the impossibility to immediately offset profits with losses as it would occur in the domestic application of the UK group relief? As from the moment that the Court found a restriction to exist should not have also considered in the proportionality test the cash flow disadvantage that arises from the non-immediate deduction of the losses? Would that be because in the facts of Marks & Spencer the subsidiaries had been wound up or sold?
5. *Scope of application of the no possibilities test* - In which circumstances is a Member State forced to accept cross-border losses? Assuming a situation of a domestic scenario in which a subsidiary within a tax group has losses and ceases its activity following its liquidation. Under the applicable domestic law, the losses of that subsidiary are lost because in the situation where the company leaves a group due to its liquidation, the losses can no longer be carried forward to the parent group member (or any other entity of the group). Following Marks & Spencer and in a cross-border scenario would that mean that based on this always--somewhere approach the Member State of the parent company would still have to take the final losses of its foreign subsidiary? On one hand the ratio of Marks & Spencer is perfectly met: the losses are final at the subsidiary level and the parent company has a tax base to offsetting those losses; on the other hand the fact is that in a pure domestic situation the losses would not be taken by the parent company anyway.
6. *Domestic v foreign losses* – A further issue arising from Marks & Spencer referred to the case where domestic non-final losses and foreign final losses were simultaneously incurred in the same period. Would there be any priority according to which cross-border group relief would only be available after all available domestic losses have been first eliminated in the state of the company receiving the foreign losses? In other words, the receiving company only has to take into account foreign losses in case it previously annuls all the domestic tax losses incurred by itself or other group companies located in the same Member State?

Ultimately the several questions that arose with the proportionality analysis performed by the Court appears (at least to some authors[1058]) to have made the case law far less predictable, far more dependent on individual cases and ultimately less objective.

[1058] See Melchior Wathelet, "Marks & Spencer Plc v Halsey: lessons to be drawn", *British Tax Review* 2 (2006), p. 132.

In the following Chapters, I will analyse the Court's case-law addressing the questions that derive from its case-law and trying to extrapolate its consequences for different aspects and perspectives of group taxation regimes.

Chapter 15

Comparability and the existence of discrimination

15.1 Introduction

The starting point in the analysis of whether national tax provisions comply with the fundamental freedoms involves the comparability between a taxpayer claiming less favourable treatment and another taxpayer.

As stated, the CJ analysis of domestic legislation in breach of the fundamental freedoms is almost exclusively based on the existence of a discriminatory treatment. The existence of a potential discrimination requires a comparison as a point of reference in order to determine if a Member State subjects a cross-border situation to less favourable treatment than the corresponding hypothetical situation with a pure domestic dimension. In the Court's own words:[1059]

> "Accordingly, a difference in treatment between two categories of taxable person may be categorised as discrimination within the meaning of the Treaty provided that the situations of those categories of taxable person are comparable in the light of the taxation rules concerned."

Currently the Court performs a two-step comparability test.[1060] First of all, it starts with a *prima facie* comparison in which compares the treatment between a domestic and a cross-border situations. As a second step, it makes an *objective comparison* in which it uses a particular standard of comparability in order to assess the existence of a disadvantageous treatment with a cross-border situation. In particular as regards this second step, for establishing whether a particular legislation is discriminatory in such a way as to infringe the fundamental freedoms, it is necessary to identify the appropriate comparator. This is hardly an easy task and it is a discussion that is not exclusive of taxation but is rather reminiscent of earlier case law of the CJ concerning the application of the fundamental freedoms in other fields of law.[1061] It is possible to explore a number of hypothetical comparative situations. The choice of a comparator is as much relevant as the decision on whether the existence of discriminatory treatment often pivots on the precise choice of

[1059] CJ 1 December 2011, C-253/09 *European Commission v Republic of Hungary*, para. 51.
[1060] See Peter Wattel, "Nondiscrimination a la Cour: The ECJ's (lack of) comparability analysis in direct tax cases", in D. Weber (ed.) *Non-discrimination in tax treaties: selected issues from a global perspective* IBFD, Amsterdam (forthcoming).
[1061] In particular in gender equality cases concerning women who were subjected to disadvantageous treatment due to pregnancy. See, for instance, case ECJ 14 July 1994, C-32/93 *Carole Louise Webb v EMO Air Cargo (UK) Ltd*, paras. 24-25.

comparator.[1062] The question of whether two situations can be described as comparable depends on what circumstances are being taken into account for the purposes of answering that question. In other words, the assessment of whether two situations under comparison are subject to using a criterion which allows determining the respective differences and similarities. And therefore, ultimately, it is dependent on the degree of similarity which the CJ requires to exist before determining if the situations are comparable and accordingly, what the Courts considers to constitute comparability.[1063]

15.2 Comparability test: general remarks

A first remark on the comparability test is that the methodology adopted by the Court is different depending on whether it is confronted with a possible breach of the legislation of the Host State or the Home State. In the first case, the comparison is performed between a national or a resident of the Host State and a non-national or non-resident of that State who has made an inbound movement towards that State. Differently, and in the second case, the comparison is made between the situation of a national or a resident who has exercised an outbound movement with the situation of national or resident who has confined to the Home Member State.

The CJ's approach to determine comparability of situations is not entirely consistent.[1064] Looking back to an analysis of the Court's judgments it is clear that the CJ has developed different approaches as to the comparability test performed in its case law on direct tax matters. In some cases, the CJ considered that the situation of residents and non-residents was comparable due to the similar tax treatment provided by the domestic law of the (Host) Member State concerned. In these cases, the criterion used by the CJ was the legal situation, that is, the fact that under the applicable legislation, both residents and non- residents were, in principle, placed in a similar footing.[1065] However, in another cluster of cases, the criterion for finding comparability between residents and non-residents was determined

[1062] See Opinion of AG Sharpston in case C-293/06, *Deutsche Shell v Finanzamt fur Grosseunternehem in Hamburg*, delivered on 8 November 2007, para. 34. See also Michael Lang, "Recent case law of the ECJ in direct taxation: trends, tensions and contradictions" *EC Tax Review* 3 (2009), p. 99 or Jerôme Montsenego, p. 133

[1063] See Gavin Barrett "Re-examining the Concept and Principle of Equality in EC Law", *Yearbook on European Law* (2001), p. 136.

[1064] See Michael Lang "Recent Case Law of the ECJ in Direct Taxation: Trends, Tensions, and Contradictions" *EC Tax Review* 3 Kluwer Law International BV (2009), pp. 98-104, "Werner Haslehner, "Consistency" and Fundamental Freedoms: The Case of Direct Taxation", *Common Market Law Review* 50 Kluwer Law International 2013, p. 739 or Rita Szudoczky "*The sources of EU law and their relationships: Lessons for the field of taxation*", doctoral dissertation UvA, pp. 528-549.

[1065] See, inter alia, ECJ 28 January 1986, C-270/83 *Commission v France*; ECJ 29 April 1999, C-311/97 *Royal Bank of Scotland*; ECJ 21 September 1999, C-307/97 *Saint Gobain ZN*; and ECJ 11 September 2008, C-43/07 *Arens-Sikken*.

based not on legal comparability but rather on factual circumstances.[1066] While the CJ acknowledged that, as a rule, the situation of residents and non-residents is not comparable, still it considered the situations to be comparable due to the factual circumstances of the case under analysis.

Another approach[1067] developed by the CJ in order to determine comparability of situations is based on purpose-related similarity test[1068] or in looking at the motivation or aim of the disputed rule. If the presumed objective of the particular tax rule calls for its application both in a cross-border and in a domestic context, then the comparability test is met. In other words, the Court is to examine the objective or purpose of the national measure at stake: if, such purpose of the domestic tax legislation is not extended to non-residents, then they are subject to a disadvantage which makes the situation comparable and, accordingly, in breach of the fundamental freedoms.[1069]

In another cluster of cases, the CJ does not engage in any comparison at all.[1070] In those cases the Court does not perform any comparability test but rather considered that an existing difference in treatment between a domestic and a cross-border situation constitute a *per se* restriction to the fundamental freedoms without substantiating the possible comparability between the two situations.[1071]

Ultimately, the different approaches followed by case law reveal that it remains unclear what the Court is actually examining when dealing with the comparability test.[1072] The

---

[1066] See, *inter alia*, cases CJ 18 June 2015, C-9/14 *Staatssecretaris van Financiën v D. G. Kieback*, para. 26; ECJ 18 July 2007, C-182/06 *État du Grand Duchy of Luxemburg v Hans Ulrich Lakebrink and Katrin Peters-Lakebrink*, para. 31; ECJ 16 October 2008, C-527/06 *R.H.H. Renneberg v Staatssecretaris van Financiën*, paras. 26; or ECJ 14 February 1995, C-279/93 *Finanzamt Koln-Altstadt v Roland Schumacker*, para. 38.

[1067] See Joachim Englisch, "Taxation of Cross-Border Dividends and EC Fundamental Freedoms", 38 *Intertax* 4 Kluwer Law International BV (2010), pp. 202-204.

[1068] See Joachim Englisch, 'Shareholder Relief and EC Treaty Law – Supranational "Aims and Effects"? 33 *Intertax* 5 Kluwer Law International (2005), p. 208.

[1069] See inter alia, cases ECJ 12 December 2002, C-385/00 *F.W.L. de Groot v Staatssecretaris van Financien*, para. 25; ECJ 8 March 2001, Joined cases C-397/98 and C-410/98 *Metallgeselchaft Ltd a.o. v Commissioners of Inland Revenue, H.M. Attorney General*, para. 60; and CJ 18 December 2014, C-133/13 *Staatssecretaris van Economische Zaken, Staatssecretaris van Financien v Q*, paras. 22 and 27.

[1070] See *inter alia*, cases ECJ 12 December 2002, C-324/00 *Lankhorst-Hohorst GmbH v Finanzamt Steinfurt*, paras. 27-32; ECJ 8 September 2005, C-512/03 *J. E. J. Blanckaert v Inspecteur van de Belastingdienst/Particulieren/Ondernemingen buitenland te Heerlen*, paras. 31-39; ECJ 15 May 2008, C-416/06 *Lidl Belgium GmbH & Co. KG v Finanzamt Heilbronn*, paras. 18-26; ECJ 23 October 2008, C-157/07 *Finanzamt für Körperschaften III in Berlin v Krankenheim Ruhesitz am Wannsee-Seniorenheimstatt GmbH*, paras. 27-39 or CJ 4 July 2013, Case C-350/11 *Argenta Spaarbank NV v Belgische Staat*, paras. 18-34.

[1071] See *inter alia*, CJ 29 November 2011, C-371/10 *National Grid Indus BV v Inspecteur van de Belastingdienst Rijnmond / kantoor Rotterdam*, para. 38

[1072] See Opinion of AG Kokott delivered on 27 February 2014, in Joined cases C-39/13, C-40/13 and C-41/13 *Inspecteur van de Belastingdienst Noord/kantoor Groningen v SCA Group Holding BV (C-39/13), X AG, X1 Holding GmbH, X2 Holding GmbH, X3 Holding BV, D1 BV, D2 BV, D3 BV, v Inspecteur van de*

existing case law and the predominant approaches adopted reveal that the CJ assesses the comparability of a situation in a quite generous way, shifting the burden to Member States in order to demonstrate the need to maintain particular reasons via providing the relevant justifications.[1073]

This way of reasoning has quite properly been acknowledged by AG Kokott.[1074] Therefore, Kokott has proposed that the comparability analysis of the CJ should be abandoned[1075] as currently it is not possible to draw a line between comparability and justification,[1076] or to identify the criteria that should lead to rejecting the objective comparability of situations:

> "21. Traditionally, it would therefore be necessary first of all to examine whether companies with a domestic branch and those with a branch in another Member State are in an objectively comparable situation, having regard to the aim pursued by the national provisions at issue.
>
> 22. Although I have carried out such examinations myself in the past, it seems to me that the time has come to dispense with them. First, not only is a demarcation with examining a ground of justification not possible but also there are not any readily apparent criteria for determining those cases in which situations must be said not to be objectively comparable in the first place. Secondly, such a finding also made it impossible to strike an appropriate balance between the fundamental freedom and the reason for the difference in treatment in the case concerned.
> […]

Belastingdienst Amsterdam (C-40/13) and Inspecteur van de Belastingdienst Holland- Noord/kantoor Zaandam v MSA International Holdings BV, MSA Nederland BV (C-41/13), para. 32.

[1073] This is quite properly illustrated in the Opinion of AG Kokott delivered on 23 October 2014 in the case *European Commission v UK*, Case C-172/13 when stating that in para. 29:

> "[…] The highlighted difference in the situation of the parent company with a resident or a non-resident subsidiary is certainly significant, if not crucial, for the purpose of examining a breach of the freedom of establishment. However, it is not evident that it precludes such a breach, as is shown by the contrary view taken by the Court in Marks & Spencer. That difference must therefore be examined as a possible justification for unequal treatment, including a test of the proportionality of the national rules."

[1074] See Opinion of AG Kokott in Case C-48/13, *Nordea Bank Danmark A/S v Skatteministeriet*, delivered on 13 March 2014, paras. 22-25.

[1075] This has actually also been the proposal made by Douma. He considers that the CJ should not apply a comparability test in direct taxation cases and therefore every disadvantage caused by a direct tax rule in a cross-border situation should be within the scope of the fundamental freedoms. Douma considers that any direct tax rule that makes a distinction on grounds of cross-border movement within the scope of the free movement, the nature or reason for the distinction is immaterial at the stage. See Sjoerd Douma, *Optimization of Tax Sovereignty and Free Movement*, IBFD Doctoral Series 21 (2011), pp. 206-207.

[1076] Similarly see Kees van Raad "Revisiting a 1981 perspective on EC non-discrimination rules in income tax matters", *British Tax Review* 3 (2006), p. 321. Van Raad acknowledges quite accurately that the Court sometimes concludes that there is absence of a forbidden discrimination by finding a justification, while at other times by finding that there is no comparability and therefore no discrimination from the outset. But ultimately, it is unclear why the Court follows one or the other path to reach to the same outcome.

> 24. […] It is not therefore surprising that, in cases where it examines the objective comparability of the situations seriously, the Court essentially looks at the same factors as it later re-examines from the point of view of justification.
>
> 25. […] the extent of the examination as to the comparability of situations has varied significantly recently, particularly in decisions relating to tax law. Thus, in some cases, the Court regards the mere fact that in both situations the procurement of a tax advantage is sought as sufficient to support a finding that those situations are objectively comparable, while, in others, it undertakes extensive investigations that look closely at the legislation of the Member State concerned. From time to time, however, the Court also dispenses entirely with an examination of the objective comparability of the situations or simply finds the situations to be comparable without giving any reasons for doing so.
>
> 26. The Court's entire case-law does not make it clear in which circumstances a difference in the situations compared should preclude their objective comparability. […]
>
> 27. If it is ultimately concluded that the situations are not objectively comparable, then, unlike in the context of considering a ground of justification, there is no examination of the proportionality of the difference in treatment of domestic and cross-border situations. It is thus no longer possible to strike an appropriate balance between the objectives associated with the fundamental freedom and those underlying the ground for differentiation between domestic and cross-border situations. A balanced solution is therefore guaranteed only where the ground for a difference in treatment is considered in the context of the examination of a ground of justification.
>
> 28. Consequently, if there is no need to examine the objective comparability of the situations and such an examination does not produce appropriate results, the Court should in future dispense with it. The merits of a difference in treatment should be assessed solely by reference to whether there is a ground capable of providing a proportionate justification for that difference in treatment."

According to Kokott abandoning the traditional comparability test is motivated by the evolution of the CJ case law. In the past the Court used to accept only the written justifications expressly provided in the Treaty. Therefore, different reasons put forward by a Member State to motivate a difference in treatment could only be assessed within the sphere of the analysis of the comparability of situations. However, and as stated before, the CJ has accepted different unwritten justifications leading to a situation in which the differences in treatment are being assessed within the scope of those different justifications.[1077] That would explain the different approaches followed by the Court in

[1077] See, *inter alia*, ECJ 21 September 1999, C-307/97 *Compagnie de Saint-Gobain v Finanzamt Aachen-Innenstadt*, paras. 44-48 in which the Court considered the comparability between branches and subsidiaries as a possible cause of justification for the *prima facie* discriminatory treatment or ECJ 8 September 2005, Case C-512/03 *J. E. J. Blanckaert v Inspecteur van de Belastingdienst/Particulieren/Ondernemingen buitenland te Heerlen*, in which the restriction was justified by the fact that non-resident was in a different situation when compared to a resident, paras. 40 and 47. Also, for instance, in cases, CJ 17 September 2015, C-589/13 *F.E. Familienprivatstiftung Eisenstadt v Unabhängiger Finanzsenat, Außenstelle Wien*, para. 58; CJ 7 November 2013, C-322/11 *K*; CJ 1 April 2014, C-80/12 *Felixstowe Dock and Railway Company Ltd and*

analyzing comparability and its broad approach as regards considering two situations objectively comparable. According to Kokott, this approach followed by the CJ is correct as it allows reaching a balanced solution between the objectives fulfilled by the fundamental freedoms and the objectives behind the reason for providing a difference in treatment between domestic and cross-border situations. This solution is achieved due to the proportionality test that allows balancing the relationship between the fundamental freedoms and the permitted Treaty objectives which permits their infringement. Therefore, and if one would consider from the outset that two situations are not objectively comparable, that would represent excluding – contrary to what happens when analyzing a justification – the proportionality of the measure which provides for the difference in treatment. That is the reason why Kokott has pleaded[1078] that a treatment should be analysed only in relation with to question if there is a reason that is able to justify, in a proportionate manner, the difference in treatment. In other words, this means that the comparability of situations should no longer be a required condition for the purpose of finding discrimination.
However, the fact is that the Court simply did not follow Kokott's proposal and still engaged in a comparability test.

It is correct that this practice of the Court leads frequently to a mix between discrimination and justification analysis[1079] which, however, does not necessarily lead to an incorrect outcome of the cases.[1080] However, this very broad approach and the non-existence of uniform criterion of comparability is subject to criticism. The arbitrariness in adopting one or the other approaches can be criticised in the sense that gives rise to legal uncertainty and ultimately makes the outcome of the cases far less predictable. In addition, it leads the Court to sometimes engage in the analysis of justifications the meaning of which is

---

others v The Commissioners for Her Majesty's Revenue & Customs, para. 25; CJ 10 April 2014, C-190/12 *Emerging Markets Series of DFA Investment Trust Company v Dyrektor Izby Skarbowej w Bydsgoszczy*, or CJ 12 June 2014, Joined cases C-39/13, C-40/13 and C-41/13, *Inspecteur van de Belastingdienst Noord/kantoor Groningen v SCA Group Holding BV (C-39/13), X AG, X1 Holding GmbH, X2 Holding GmbH, X3 Holding BV, D1 BV, D2 BV, D3 BV, v Inspecteur van de Belastingdienst Amsterdam (C-40/13) and Inspecteur van de Belastingdienst Holland- Noord/kantoor Zaandam v MSA International Holdings BV, MSA Nederland BV (C-41/13)*, para. 28, the Court engages in the comparability test under the heading of justifications to the restriction. The typical wording used by the Court is:

> "In order for such a difference in treatment to be compatible with the provisions of the Treaty on freedom of establishment, it must either relate to situations which are not objectively comparable — in which case the comparability of a cross-border situation with an internal situation must be examined having regard to the aim pursued by the national provisions at issue — or be justified by an overriding reason in the public interest."

[1078] See Opinion of AG Kokott delivered on 13 March 2014, in case C-48/13 *Nordea Bank Danmark A/S v Skatteministeriet*, para. 28.

[1079] See Julian Ghosh, "*Cadbury Schweppes*: Breach, Abuse Justification and Why They Are Different", in Rita de la Feria and Stefan Vogenauer (eds.) *Prohibition of Abuse of Law – A New General Principle of EU Law?* Hart Publishing (2011), p. 463.

[1080] Likewise, see Peter J. Wattel, "Argenta Spaarbank: Notional Interest Deduction regime – treatment of foreign permanent establishments is a restriction on the freedom of establishment", *H&I* 2013/12.4, p. 30.

unclear.[1081] Ultimately, it also increases the relevance of proportionality since the difference in treatment will always have to be justified and proportional, whereas engaging into the traditional discrimination test, the absence of comparability does not require any justification at all.

From a conceptual perspective, the broad approach towards comparability or not engaging in a comparability test at all is also incorrect. In fact, it should not be overlooked that the difference between conclusion that there is no breach of the fundamental freedoms and concluding that such breach is justified is quite crucial. The first step involves an analysis of the definition of the scope of the freedoms[1082]. This means that, in case a situation is incomparable, there is no discrimination and, therefore, the fundamental freedoms have not been infringed. In other words, the situation is simply outside the field of application of the fundamental freedoms.
Differently, in the case there is a breach of one or more of the fundamental freedoms, such breach can only be remedied if it pursues a Treaty-compatible aim and it is proportional. In other words, a breach of the fundamental freedoms can only be explained legitimately by pursuing another conflicting Treaty objective. In such case, the proportionality will hold the balance of the relationship between the infringed fundamental freedoms and the permitted Treaty objective that allows its infringement. Therefore, and conceptually, there is a major difference between finding that there is no breach of the fundamental freedoms and when such breach exists, scrutinising the competition between different treaty objectives as to whether to accept or not a justification of such breach. A very broad understanding of comparability means ultimately that all situations fall within the scope of the Treaty. This means that the CJ engages many times the fundamental freedoms in situations which, from a tax perspective, do not constitute a restriction, shifting the burden to Member States to put forward reasons as to existing differences in treatment.[1083]

15.3 Comparability test in group taxation

The cases involving group taxation regimes represent clear examples of the two predominant approaches most recently followed by the Court as regards the comparability test of either (i) considering the aim of the national legislation in order to establish whether

[1081] Differently, see Wolfgang Schön, Neutrality and Territoriality – Competing or Converging Concepts in European Tax Law?, 69 *Bulletin for International Taxation* 4/5 IBFD (2015), p. 284, who considers that the idea of tax neutrality inherent to the internal market requires dismissing the comparability test as proposed by AG Kokott or at least assuming that, in principle, resident and non-resident taxpayers are comparable.
[1082] See Julian Ghosh, "*Cadbury Schweppes*: Breach, Abuse Justification and Why They Are Different", in Rita de la Feria and Stefan Vogenauer (eds.) *Prohibition of Abuse of LAw – A New General Principle of EU Law?* Hart Publishing (2011), p. 460.
[1083] As stated by Wattel, ultimately this means that Member States have the need to virtually justify all their tax measures. See Peter Wattel, "Non discrimination a la Court" The ECJ's lack of comparability analysis in direct tax cases", in D. Weber (ed.) *Non-discrimination in tax treaties: selected issues from a global perspective* IBFD, Amsterdam (forthcoming).

there is a restriction on the fundamental freedoms or (ii) not engaging in comparability at all.

As regards the objective or aim of the national tax legislation at dispute this evident in the cases like *OyAA*[1084] where the CJ made reference to the fact that:

> "[…] in relation to the aim pursued by the Finnish system of intra-group financial transfers, the mere fact that parent companies which have their corporate establishment in another Member State are not subject to tax in Finland does not differentiate the subsidiaries of those parent companies from the subsidiaries of parent companies which have their establishment in Finland, and does not render the positions of those two categories of subsidiary incomparable [underscore BdS]"

In a similar fashion the the Court observedd in *Papillon* that[1085]:

> In order to establish whether discrimination exists, the comparability of a Community situation with one which is purely domestic must be examined by taking into account the objective pursued by the national provisions at issue […][underscore BdS]

And similarly[1086] in *X Holding,* reference was made to the fact that:

> "[…] the situation of a resident parent company wishing to form a single tax entity with a resident subsidiary and the situation of a resident parent company wishing to form a single tax entity with a non-resident subsidiary are objectively comparable with regard to the objective of a tax scheme such as that at issue in the main proceedings in so far as each seeks to benefit from the advantages of that scheme, which, in particular, allows the profits and losses of the companies constituting the single tax entity to be consolidated at the level of the parent company and the transactions carried out within the group to remain neutral for tax purposes." [underscore BdS]

And in identical terms in the *SCA Holding Group* case when stating[1087] that:

> "29. As regards comparability, the provisions of the Law on corporation tax of 1969 at issue in the main proceedings aim to treat, as far as possible, a group constituted by a parent company with its subsidiaries and its sub-subsidiaries in the same way as an undertaking with a number of establishments, by enabling the results of all those companies to be consolidated for tax purposes.
>
> […]

[1084] See ECJ, 18 July 2007, Case C-231/05, *Oy AA*, para. 38.

[1085] See ECJ 27 November 2008, Case C-418/07, *Société Papillon v Ministére du Budget, des Comptes Publics et de la Fonction Publique,* para. 27. The aim of the national tax legislation was similarly the criterion adopted in CJ 6 September 2012, Case C-18/11, *The Commissioners for Her Majesty's Revenue & Customs v Philips Electronics UK Ltd*, para. 18

[1086] Another example may be found in CJ 1 April 2014, C-80/12 *Felixstowe Dock and Railway Company Ltd and others v The Commissioners for Her Majesty's Revenue & Customs,* para. 26.

[1087] CJ 12 June 2014, Joined cases C-39/13, C-40/13 and C-41/13 *Inspecteur van de Belastingdienst Noord/kantoor Groningen v SCA Group Holding BV (C-39/13), X AG, X1 Holding GmbH, X2 Holding GmbH, X3 Holding BV, D1 BV, D2 BV, D3 BV, v Inspecteur van de Belastingdienst Amsterdam (C-40/13) and Inspecteur van de Belastingdienst Holland- Noord/kantoor Zaandam v MSA International Holdings BV, MSA Nederland BV (C-41/13)*, paras. 29, 31 and also para. 51.

> 31. Those two situations are therefore objectively comparable to the extent that the benefit of the advantages of the tax entity regime is sought in both situations for the group formed by the parent company and the sub-subsidiaries. [underscore BdS]"

But for instance in *Marks & Spencer*, the CJ appears not to engage in any comparability at all. The Court started by recalling that residence for tax purposes may be a reason to provide a difference in treatment between resident and non-resident taxpayers. The CJ further added that in each specific situation is necessary to consider whether the fact that a tax advantage is only granted to resident taxpayers is based on relevant objective differences vis-à-vis non-resident taxpayers. For that purpose it considered that taxing residents on worldwide basis and non-residents on from profits arising from activities carried out in that State is in line with the principle of territoriality. Then the Court simply concludes without giving any further reason that[1088]:

> "However, the fact that it does not tax the profits of the non-resident subsidiaries of a parent company established on its territory does not in itself justify restricting group relief to losses incurred by resident companies."

All these cases on group taxation clearly demonstrate the generous approach adopted by the Court as regards the comparability test. While it is not unclear what the CJ uses for determining comparability and particularly the different approaches adopted in some cluster of cases as compared to other, the fact is that the Court appears to conclude that domestic and cross-border situations involving tax groups are indeed comparable[1089] predominantly based on the criterion of the aim of the legislation concerning tax groups.

15.4 Group taxation and the choice of the right comparator: vertical or horizontal comparison

The prohibition of discriminatory treatment lies at the heart of the application of the fundamental freedoms. This is true under current case law not only for inbound situations that require national treatment, but also outbound situations concerning cases where the Home State of the taxpayer enacts different rules for domestic and cross-border situations.
The CJ's approach to comparability in general involves a *vertical comparison*, which implies that Member States are not allowed to treat cross-border transactions less favourably than equivalent purely domestic situations. An alternative approach may be conceived by performing a *horizontal comparison*, i.e. between two legal forms: subsidiary

[1088] ECJ 13 December 2005, Case C-446/03, *Marks & Spencer plc v David Halsey (Her Majesty's Inspector of Taxes)*, para. 40.
[1089] According to AG Kokott, domestic and cross-border groups are in general comparable as long as there is a cross-border disadvantage. See Opinion of AG Kokott delivered on 27 February 2014, in Joined cases C-39/13, C-40/13 and C-41/13, *Inspecteur van de Belastingdienst Noord/kantoor Groningen v SCA Group Holding BV (C-39/13), X AG, X1 Holding GmbH, X2 Holding GmbH, X3 Holding BV, D1 BV, D2 BV, D3 BV, v Inspecteur van de Belastingdienst Amsterdam (C-40/13) and Inspecteur van de Belastingdienst Holland-Noord/kantoor Zaandam v MSA International Holdings BV, MSA Nederland BV (C-41/13)*, paras 32 and 35.

and PE and/or comparison between a cross-border situation with another (hypothetical) cross-border situation.[1090]

15.4.1 Vertical comparison

As analysed above, typically the CJ performs a vertical comparison when dealing with the specific cases of tax groups i.e. the treatment of purely domestic groups as per comparison with cross-border groups. The underlying concept is that, if it is possible within domestic borders to benefit from the tax group regime but such possibility is denied in the case the group has foreign subsidiaries, that entails a potential discrimination as it makes it less attractive for groups to establish themselves across the border.

In general, I consider that this vertical comparison performed by the CJ not satisfactory. Focusing primarily on *Marks & Spencer* which is the first and landmark case within this field, the first difficulty in understanding its outcome relies on the abovementioned principles which relate to the interaction between Member States' tax sovereignty and the scope of application of the fundamental freedoms. In this case, the foreign subsidiaries were outside the scope of the UK tax jurisdiction. This means that the foreign subsidiaries did not meet any of the criteria that the UK defined as triggering jurisdiction to tax based on its fiscal sovereignty. They were simply not subject to tax in the UK.[1091] Therefore, and since the UK did not exercise any tax jurisdiction over the foreign companies, the logical conclusion would have been that there could no infringement of the TFEU in the first place and, consequently, no need to proceed with possible justifications. In fact, it is only where a Member State decides to exercise its powers of taxation that equal treatment must be granted between domestic and cross-border situations[1092]. In the Court's own words:[1093]

> "31. In relation to direct taxes, the situation of residents and of non-residents are not, as a rule, comparable.
> […]
> 34. Consequently, the fact that a Member State does not grant to a non-resident certain tax benefits which it grants to a resident is not, as a rule, discriminatory since those two categories of taxpayer are not in a comparable situation."

However the Court's approach regarding comparability was merely to look from the perspective of the taxpayer in the Home State and disregarding the tax treatment of the other party in the transaction from the perspective of such State.

[1090] See Axel Cordewener, "EC law protection against "horizontal" tax discrimination on the rise – or how to play snooker in an Internal Market", 16 *EC Tax Review* 5 (2007), p. 210.

[1091] It should be stressed that the fact that the UK taxed the dividends distributed constitutes an irrelevant argument. The taxation of dividends is already an exercise of jurisdiction over the parent UK resident company and not taxation over the profits of the subsidiaries located in other Member States.

[1092] See ECJ 13 March 2007, C-524/04 *Test Claimants in the Thin Cap Group Litigation v Commissioners of Inland Revenue*, para. 90.

[1093] ECJ 14 February 1995, C-279/93 *Finanzamt Koln-Altstadt v Roland Schumacker*, paras 31 and 34.

The Court should have not engaged the competence of the EU under the freedom of establishment since in that case, the EU had no competence to act in order to require the UK to extend its taxing jurisdiction.

This reasoning can be found in AG Kokott's Opinion in the *Commission v UK*[1094] case when stating that:

> "[…] it seems reasonable to assume […] that resident and non-resident subsidiaries are not at all in comparable situation having regard to the allocation of the power to impose taxes between Member States. Whilst, in accordance with the internationally recognised principle of taxing companies on their worldwide profits, a non-resident company permanent establishment is still subject to the fiscal sovereignty of the State in which the company is established and may be taxed by that State, that is not the case, in principle, for a company's non-resident subsidiaries. There are subject to tax in the State in which the parent company is established solely on the basis of their domestic activity and, if appropriate, in the context of exceptional add-back taxation with a view to combating abuse."
>
> 27. […] That principle effectively means that a Member State must take into account losses from foreign activity only if it also taxes that activity.
>
> 28. […] It seems inappropriate to treat a resident parent company and a non-resident subsidiary as one and the same taxpayer in so far as the non-resident subsidiary is not subject to domestic taxation at all and, as such, is not a taxpayer itself.
>
> 29. […] The highlighted difference in the situation of a parent company with a resident or a non-resident subsidiary is certainly significant, if not crucial for the purpose of examining a breach of the freedom of establishment. However, it is not evident that it precludes such a breach, as is shown by the contrary view taken by the Court in *Marks & Spencer*. […]"

By requiring the UK to take the losses of those subsidiaries, the Court forced the exercise of tax jurisdiction[1095] where such jurisdiction previously did not exist at all. The fact that the losses in the *Marks & Spencer* situation could no longer be used in the Member States of the subsidiaries is in fact a solution to a problem originating from a disparity[1096] – the

---

[1094] See Opinion of AG Kokott delivered on 23 October 2014 in case C-172/13 *European Commission v United Kingdom of Great Britain and Northern Ireland*, paras. 26-29.

[1095] A perfect example of this is the fact that the UK is forced to apply its tax provisions such to calculate the losses and thereafter give relief at the level of the claimant company.

[1096] This was precisely the argument made by the UK Special Commissioners in order to refuse the claim made by *Marks & Spencer*:

> "What the Appellant is really complaining about is the interaction of the host and origin States" tax systems (as) none of the countries concerned – the United Kingdom, France, Belgium and Germany – has given relief for the losses. There is no case law, however, in which the Court has characterized such dislocation as a restriction on the freedom of establishment, akin to an exclusion from the markets of other Member States. The fact that choosing to establish through foreign subsidiaries it found itself subject to different tax rules has in this respect not a restriction akin to an exclusion from those other markets but a reflection of the failure of Member States to harmonize their corporate tax systems, as Case C-250/95, Futura and Case C-336/96 Gilly illustrate."

interaction of the tax systems of the Member States[1097] - and not in a restriction,[1098] since a domestic and a cross-border situation could not, in essence, be comparable.[1099] According to Belgium, France and Germany, the losses of the subsidiaries could not be used and would be lost in accordance with the respective domestic tax systems. In the UK, the losses could also not be used because the foreign subsidiaries were not even under the UK tax jurisdiction. In other words: loosing the possibility to use the tax losses was a mere consequence of the fact that a parent and subsidiaries were subject to the rules of (at least) two different tax systems. In fact, losses that are not taken into account do not lead to discrimination as such.[1100] Therefore, none of the Member States (but certainly not the UK) should have been forced to adapt its tax system to remove those disadvantages. The absence of loss relief was actually not caused by the parent company excluding foreign losses but by the fact that the State where the subsidiary resides did not provided for domestic relief.[1101]

As the Court has correctly stated in other case-law:

> "Freedom of establishment cannot be understood as meaning that a Member State is required to draw up its tax rules on the basis of those in another Member State in order to ensure, in all circumstances, taxation which removes any disparities arising from national tax rules, given the decisions made by a company as to the establishment of commercial structure abroad may be to the company's advantage or not." [1102]
>
> "[…] according to consistent case-law, in the absence of any unifying or harmonizing Community measures, Member States can retain the power to define the criteria for taxing income and wealth with a view to eliminating double taxation, by means of conventions if necessary.[1103]

See UK Special Commissioners, 25 and 26 November 2002, *Marks & Spencer PLC v David Halsey*, para. 75.

[1097] See Julian Ghosh, *Principles of the Internal Market and Direct Taxation* (Key Haven Publications PLC, 2007), p. 90.

[1098] In fact and from the perspective of the Home State, the UK, the decision of not to tax a foreign company, i.e. to permit export cannot constitute a market access restriction. It is actually the reverse. See on this Malcolm Gammie, "The compatibility of "national principles of the Member States" with a fully integrated market", in Frans Vanistandael (ed.), *EU Freedoms and Taxation*, EATLP International Tax Series, Volume 2, IBFD, (2006), p. 115.

[1099] As referred to by Terra & Wattel, *European Tax Law*, Fiscale Handboeken no. 10, 2nd edition (2012), pp. 897 and 1003–1005 the comparability typically requires a subject to tax standard which was totally absent in this case: UK subsidiaries were subject to tax while foreign subsidiaries were not, i.e. completely outside of the UK tax jurisdiction.

[1100] See Michael Lang, "Recent Case Law of the ECJ in Direct Taxation: Trends, Tensions and Contradictions", EC Tax Review 3 (2009), p. 99.

[1101] See Ben Terra & Peter J. Wattel, *European Tax Law*, Fiscale Handboeken no. 10, 2nd edition (2012), p. 1029.

[1102] ECJ 28 February 2008, C-293/06 *Deutsche Shell GmbH v Finanzamt für Großunternehmen in Hamburg*, para. 43.

[1103] See CJ 10 June 2015, C-686/13 *X AB v Skatteverket*, para. 33; ECJ 23 October 2008, C-157/07 *Finanzamt für Körperschaften III in Berlin v. Krankenheim Ruhesitz am Wannsee-Seniorenheimstatt GmbH*, paras. 48-49. See also, ECJ 28 February 2008, C-293/06 *Deutsche Shell GmbH v Finanzamt für Großunternehmen in Hamburg*, para. 42.

> That competence also implies that a Member State cannot be required to take into account, for the purposes of applying its tax law, of the possible negative results arising from particularities of legislation of another Member State […]."

It seems in fact that the CJ did not respect the freedom of Member States to limit their tax jurisdiction[1104]and did not accept the possibly adverse consequences that may derive from the parallel exercise of taxing powers between Member State as it did as regards juridical double taxation[1105].

A closer analysis of the CJ judgemnt evidences the deficiencies on its reasoning[1106] stated above and my criticism to the vertical comparison. The Court observes that: [1107]

> "In that regard, it must be noted that, in tax law, the taxpayers' residence may constitute a factor that might justify national rules involving different treatment for resident and non-resident taxpayers. However, residence is not always a proper factor for distinction. In effect, acceptance of the proposition that the Member State in which a company seeks to establish itself may freely apply to it a different treatment solely by reason of the fact that its registered office is situated in another Member State would deprive Article 43 EC of all meaning (see Case 270/83 *Commission* v *France* [1986] ECR 273, paragraph 18)."

The first sentence starts with a redundancy. It holds that the place of residence of a taxpayer may constitute a justification for different treatment based on the place of residence. More striking is the fact that residence is considered as a justification ground[1108]. Consistent case-law of the Court had referred to residence as a criterion for comparison for the discrimination analysis when stating that:

> "In relation to direct taxes, the situations of residents and of non-residents are not, as rule, comparable."

Indeed, the place of residence is an objective criterion for determining tax jurisdiction. The TFEU does not restrict the competence of Member States to determine or allocate their tax jurisdiction on the basis of objective criteria such as residence, as long as, when exercising such competence, that is, within their tax jurisdiction, they do not provide for discriminatory treatment. If a person does not fall into the tax jurisdiction of a Member

---

[1104] See Dennis Weber, "Is limitation of tax jurisdiction a restriction to free movement? The ECJ should show more respect for the principle of territoriality and for its own basic assumptions" (2007) available at http://www.eatlp.org/uploads/public/Weber%20EATLP%20-%20Helsinki%20-%202007%20-%20Weber.pdf

[1105] See cases ECJ 16 July 2009, C-128/08 *Jacques Damseaux v Belgian State*, para. 27; ECJ 20 May 2008, C-194/06 *Staatssecretaris van Financiën v Orange European Smallcap Fund NV*, para. 32; ECJ 14 November 2006, C-513/04 *Mark Kerckhaert and Bernadette Morres v Belgische Staat*, , paras. 20 and 24.

[1106] Which is applicable, *mutatis mutandis*, to *Oy AA* or *X Holding* cases.

[1107] ECJ 13 December 2005, C-446/03, *Marks & Spencer plc v David Halsey (Her Majesty's Inspector of Taxes)*, para. 37.

[1108] Clearly in this sense see Opinion of AG Kokott delivered on 23 October 2014 in Case C-172/13 *European Commission v United Kingdom of Great Britain and Northern Ireland*, para. 31:

> "The fact that the foreign activity of non-resident subsidiaries in the United Kingdom is not subject to tax constitutes such a justification."

State based on one of its defined objective criteria then, by definition, there cannot be any discriminatory treatment in relation to that State: the person simply does not exist for tax purposes within such jurisdiction and, in accordance, cannot be discriminated.

As referred to above, the comparability in the concrete case of cross-border group taxation case law is based on the aim pursued by the national legislation at stake. It is also based on the assumption that parent companies with domestic subsidiaries should not be subject to different treatment of parent companies with foreign subsidiaries. The focus seems to start first on the fact that in both cases, the parent companies are comparable and second, because the Court rejects the possibility to discriminate because *the registered office of the company is established in another Member State*; but misses the point that the reason for the difference in treatment is precisely because a subsidiary being within the tax jurisdiction of a Member State it is not comparable for tax purposes as being outside the tax jurisdiction of such State.[1109] And such conclusion derives precisely from the CJ case law[1110] when stating that:

> "[…] resident shareholders are not necessarily in a situation which is comparable to that of shareholders receiving dividends who are residents in another Member State.
>
> However, as soon as a Member State, either unilaterally or by way of a convention, imposes a charge to tax on the income, not only of resident shareholders, but also of non-resident shareholders, from dividends which they receive form a resident company, the situation of those non-resident shareholders becomes comparable."

This illustrates that only when a Member State may impose tax on a non-resident – because such non-resident is within its tax jurisdiction – may the situation, in certain circumstances, become comparable with a resident. And such tax jurisdiction exists because a Member State, either unilaterally or by way of a convention, has decided to do so. In other words, subject to tax and not subject to tax are not comparable, unless a Member State has decided to exercise tax jurisdiction over them.[1111] And such tax jurisdiction derives from a unilateral

---

[1109] This conclusion is reinforced by the reasoning used by the Court in paragraph 38 of the *X Holding* case. As held by AG Wattel, if from the perspective of Home State the Court concludes that a foreign PE is not comparable with a domestic subsidiary because the first is subject to limited tax liability while the second is subject to unlimited tax liability, then foreign subsidiaries are even less comparable as they are totally outside the tax jurisdiction of such Home State. See Additional Opinion of AG Wattel of 7 July 2010 in HR case no. 43484 bis, *X Holding BV v Secretariat of Financien*, para. 3.9.

[1110] See, *inter alia*, cases ECJ 8 November 2007, C-379/05 *Amurta SGPS v Inspecteur van de Belastingdienst/Amsterdam*, paras. 37-39. Similarly ECJ 14 December 2006, C-170705 *Denkavit Internationaal BV and Denkavit France SARL v Ministre de l"Économie, des Finances et de l"Industrie*, paras. 34-35 or ECJ 12 December 2006, C-374/04, *Test Claimants in Class IV of the ACT Group Litigation v Commissioners of Inland Revenue*, paras. 68-70; ECJ 19 November 2009, C-540/07 Commission of the European Communities v Italian Republic, paras. 52-53; and CJ, 3 June 2010, C-487/08 *European Commission v Kingdom of Spain*, paras. 52-53.

[1111] This is clearly acknowledged by AG Wathelet in his Opinion in *Timac Agro* case. Wathelet criticizes the approach of looking at the purpose of the legislation as a criterion for ascertaining comparability between residents and non-residents. Wathelet considers that for the purpose of determining whether there is

decision by the Member State or is bilaterally agreed under a tax treaty, but *it is not* created by the Court. This approach is correctly reflected in the Court's reasoning followed in the *X AB* case[1112] on whether Sweden should allow the deduction of currency losses arising from holdings in foreign shares:

> "38. […] As the referring court observed, the national legislation at issue in the case giving rise to the judgment in *Deutsche Shell* (C-293/06, EU:C:2008:129) provided that, as a general rule, currency gains were taxed and, at the same time, currency losses were deductible unless a convention to prevent double taxation stipulated otherwise.
>
> 39. However, that is not the case in the main proceedings, since, as has been stated at paragraph 30 above, the Swedish tax law at issue in the main proceedings is, in principle, indifferent to the results of capital transactions on "holdings for business purposes", in respect of which the Kingdom of Sweden has chosen, as a general rule, not to exercise its powers of taxation.
>
> 40. In those circumstances, it cannot be inferred from the provisions of the FEU Treaty concerning freedom of establishment that that Member State would be required to exercise — asymmetrically, moreover — its taxation powers so as to permit the deduction of losses from operations whose results, if they were positive, would not in any event be taxed."

In fact, it should be stressed that the fundamental freedoms of the TFEU are applied by the Court in order to achieve negative integration:[1113] meaning to remove domestic (tax) law provisions which are in breach of such freedoms. The wording of each of the freedoms reflects such a negative nature with references to abolition or prohibition of restrictions within the EU. In *Marks & Spencer,* the Court, by determining that final losses had to be taken into account, forced the UK to assert its tax jurisdiction to a situation where it had opted – in accordance with the legitimacy that arose from its tax sovereignty – not to exercise such jurisdiction.[1114] The positive integration is quite evident in the fact that UK was required to extend tax jurisdiction to foreign subsidiaries where it has previously

---

discriminatory treatment it is required that a certain Member State has the power to tax the income at stake. Accordingly, the AG concludes that the situation of residents and non-residents is not comparable if that Member State does not have powers to tax the non-residents. See Opinion of AG Wathelet delivered on 23 September 2015 in case C-388/14, *Timac Agro Deutschland GmbH v Finanzamt Sant Augustin*, ECLI:EU:C:2015:533 paras. 30-38.

[1112] CJ 10 June 2015, C-686/13 *X AB v Skatteverket*, paras. 38-40.

[1113] See in this regard also Julian Ghosh, *Principles of the Internal Market and Direct Taxation* (Key Haven Publications PLC, 2007), pp. 82–94.

[1114] From this perspective, it is hard to explain the difference in outcome between *Futura Participations* and *Marks & Spencer* as in both cases there was a transfer of losses between entities located in different jurisdictions. See in this regard, Yariv Brauner, Ana Paula Dourado & Edoardo Traversa, "Ten Years of Marks & Spencer", 43 Intertax 4, *Kluwer Law International BV* (2015), p. 308

chosen not do so and which, therefore, were not subject to tax in the UK in the first place.[1115]

15.4.2 Horizontal comparison

While following a vertical comparison has consistently led the Court to (wrongly in my view) find that the different treatment between cross-border and domestic groups leads to a breach to the fundamental freedoms, an alternative test can be conceived by performing a horizontal comparison:[1116] PE v subsidiary.[1117] In concrete terms, in the case of group taxation regimes the potential discrimination involves a comparison between two different types of cross-border secondary establishments, that is, a parent company with a foreign subsidiary compared to the treatment of a parent company with a foreign PE.[1118] This means that the same cross-border situation is tested against the same fundamental freedom but involving a different comparison.[1119]

Article 49 (1) of the TFEU prohibits any:

> "[…] restrictions on the setting-up of agencies, branches or subsidiaries by nationals of any Member State established in the territory of any Member State."

By making reference to both branches or subsidiaries, Article 49 aims at providing a freedom of choice of cross-border establishments[1120] by means of either dependent or independent legal entities. This is materialized through two different types of non-discrimination/non-restriction situations protected by the scope of this provision: (i) non-discrimination by the Host State of the branch or the subsidiary (market participation) as

---

[1115] Concurrently, see Dennis Weber "In Search of a (New) Equilibrium Between Tax Sovereignty and the Freedom of Movement within the EC", 34 *Intertax* 12, Kluwer Law International BV, p. 596. Weber quite properly refers that with *Marks & Spencer* the Court actually created tax liability for the losses of non-resident subsidiaries in the UK and that represents a major breach of Member States" sovereignty.

[1116] For the purposes of the analysis performed in this section, horizontal comparison refers to different types of cross-border secondary establishments. The reference to horizontal comparison – not analysed herewith - can also consist of the comparison between two cross-border situations involving two Member States.

[1117] From the outset, it is possible to distinguish the following tax disadvantages deriving from differences between PEs and subsidiaries: (i) Discrimination based on the foreign or domestic residence; (ii) Discrimination between different legal forms; (iii) Double taxation in case of certain legal forms. See Wolfgang Schön, "The free choice between the right to establish a branch and to set-up a subsidiary – a principle of European business law", *European Business Organization Law Review* 2, p. 357.

[1118] The subsidiary/PE comparison is only relevant from the perspective of the Home State, i.e. the Member State where the parent company is located but not from the Host State (e.g. an *Oy AA* scenario). Only in a Home State situation there is taxation of the worldwide profits of resident companies including income obtained by foreign PE, turning the alternative comparator relevant. Differently from the perspective of the State where a subsidiary is located, it becomes irrelevant since the Host State does not tax the income obtained by the foreign head office or parent company. See Jérôme Monsenego, *Taxation of Foreign Business Income Within the European Internal Market*, IBFD Doctoral Series Vol. 22 (2012), p. 112.

[1119] See Axel Cordewener et al. "The Tax Treatment of Foreign Losses: Ritter, M&S and the Way Ahead (Part Two), *European Taxation* 5, IBFD (2004), p. 230.

[1120] See ECJ 9 March 1999, C-212/97 *Centros Ltd v Erhvervs-og Selskabsstyrelsen,* para. 16.

well as non-restriction by the Home State of the parent company (market access) and (ii) free choice of legal form by avoiding differences in treatment in each form of investment, either being a agency, a branch or a subsidiary. However, it does not result from Article 49 that the different investment forms should receive the same tax treatment. This remark was properly made by AG Mancini in his Opinion in *Avoir Fiscal*[1121] when opining:

> "[…] that right [of establishment] includes the abolition of restrictions on "the setting up of agencies, branches or subsidiaries". In my opinion, those words cannot be interpreted as meaning that the three forms of secondary establishment must be subject to absolutely identical rules whether in regard to taxation or to anything else."

And as regards the tax treatment this was specifically dealt with by AG Maduro in his Opinion in *Marks & Spencer* when concluding that[1122]:

> "However, the provisions on freedom of establishment do not preclude different tax treatment from being accorded to legal or natural persons in different legal situations. It is not the purpose of those provisions to impose uniformity in the regimes applicable to the different types of establishment. They merely seek to ensure tax neutrality in the exercise of the right to freedom of establishment within the Community. Any other solution would have the effect of calling in question the more stringent tax regimes among the Member States even though no transnational situation was specifically contemplated. That cannot be the purpose of the Treaty rules on freedom of movement."

This assumption in correct. A foreign subsidiary is a non-resident legal entity, while a PE is legally part of the resident company. As a matter of principle the CJ accepts those differences[1123] and does not assimilate PEs and subsidiaries as such[1124].

However, from the perspective of the Host State, the CJ has often performed a horizontal comparison considered that a branch of a foreign company is comparable to a subsidiary in

---

[1121] See Opinion of AG Mancini delivered on 16 October 1985 in Case C-270/83, *Commission v French Republic* ("Avoir Fiscal"), para. 11.

[1122] See Opinion of Advocate General Poiares Maduro in Case C-446/03, *Marks & Spencer plc v David Halsey (HM Inspector of Taxes)*, delivered on 7 April 2005, para. 49.

[1123] For the differences between subsidiaries and branches see Peter J. Wattel, "Corporate tax jurisdiction in the EU with respect to branches and subsidiaries; dislocation distinguished from discrimination and disparity; a plea for territoriality", *EC Tax Review* 2003/4, pp. 194-197. Wattel identifies nine distinctions between PEs and subsidiaries, five of those distinctions from the perspective of the Host State, three from the perspective of the Home State, and one distinction from the perspective of both States.

[1124] This is the case either from the perspective of the Home State or the Host State. In a Home State situation the CJ acknowledges the difference since PEs are partially within the tax jurisdiction of the Member State of origin while subsidiaries are not (e.g. X Holding). In a Host State situation the CJ in the Futura case accepted the differences between PEs and subsidiaries by refusing that a foreign losses could be deducted in the State of the PE while a resident company would claim the deduction of foreign incurred losses. The CJ considered that no discrimination was at stake due to the differences in the taxation (domestic basis v worldwide income) of the two different legal forms.

such State. This reasoning can be traced back to the *Avoir Fiscal*[1125] case.[1126] The case refers to the application of the French imputation credit (*avoir fiscal*) which aimed at avoiding the economic double taxation of dividends. The *avoir fiscal* was only granted to natural persons or entities resident in France, and not to non-residents operating in France through a PE (for example, branches or agencies). The CJ considered that such different treatment between domestic companies and PE constituted a discriminatory treatment which contravened the freedom of establishment since both entities were treated in the same way for the purposes of taxing their profits.[1127] This is understandable given that as a general rule, the Host State applies its national tax rules to determine the taxable income of PE as if it were a domestic entity. In other words, as both the method for determining the taxable income and the rate of taxation were identical for subsidiaries, on the one hand, and branches and agencies, on the other, no objectively justified difference between the two situations could be sustained.[1128] This means that if similar rules apply there is no reason to provide for a different treatment because the difference between resident and non-resident becomes immaterial.

A similar reasoning was found latter in *Royal Bank of Scotland,*[1129]which dealt with a Greek branch which was subject to a higher corporate income tax rate (40%) when compared to the one applicable to Greek financial institutions (35%). Since the determination of the taxable base in Greece[1130] was no different for resident and non-resident companies, the higher tax burden was found to be discriminatory.[1131]
Again the same reasoning was followed by the Court in order to extend the same treaty benefits granted to subsidiaries to PEs in the *Saint-Gobain* case.[1132] The case dealt with a French company that established a branch in Germany, which in turn held shares in US and Swiss companies. Germany refused to grant to that branch certain tax advantages that were made available to its resident companies applicable tax treaties. The CJ confirmed that an

---

[1125] See Tom O´Shea, "Freedom of Establishment Tax Jurisprudence: Avoir Fiscal Re-Visited", *EC Tax Review* 6 (2008), pp. 259-275 and Servaas van Thiel, *EU Case Law on Income Tax - Part I*, IBFD 2001, pp. 137-168.
[1126] See ECJ 28 January 1986, C-270/83 *Commission v French Republic* ("Avoir Fiscal").
[1127] See ECJ 28 January 1986, C-270/83, *Commission v French Republic* ("Avoir Fiscal"), paras. 19 and 20.
[1128] See Jan Wouters, "The Case-Law of the European Court of Justice on Direct Taxes: Variation upon a Theme", 1 *Maastricht Journal of European and Comparative Law* (1994), p. 193
[1129] See ECJ 14 September 1999, C-311/97 *Royal Bank of Scotland plc v Elliniko Dimosio (Greek State*).
[1130] The difference arises that while France applied a pure territorial system for the taxation of both resident and non-resident companies, Greece applied a worldwide system for the taxation of resident companies. The Court acknowledged that difference but considered that it arises from the limited tax sovereignty of the State in which the income arises but it was not sufficient to make the two situations not comparable in regard to the determining the taxable base. See ECJ 14 September 1999, C-311/97 *Royal Bank of Scotland plc v Elliniko Dimosio (Greek State*), para. 29.
[1131] See ECJ 14 September 1999, C-311/97 *Royal Bank of Scotland plc v Elliniko Dimosio (Greek State*), para. 28.
[1132] See ECJ 21 September 1999, C-307/97 *Compagnie de Saint-Gobain v Finanzamt Aachen-Innenstadt*.

identical treatment should have been given to a German PE and a German resident company[1133].

The rationale for giving PEs and subsidiaries the same tax treatment is a recognition of the fact that the Host State taxes profits of the branches and subsidiaries in the same way. In other words, from the moment that a Member State asserts jurisdiction over a branch in taxing its profits, that Member State cannot exercise such jurisdiction to treat the person who has established a branch less favourably than one who has established the subsidiary.

The comparability between PEs and subsidiaries in a Host State situation was also applied within the analysis of the personal scope of groups. In the *Halliburton*[1134] case, the Court dealt with a reorganization of the Halliburton Group in Europe. As part of an intra-group reorganization of the German subsidiary of the Group transferred to the Netherlands subsidiary its PE located in the Netherlands that included immovable property located therein. Under Netherlands domestic tax law, transfer of immovable property was subject to real estate transfer tax to be borne by the acquirer (in this case, the Netherlands subsidiary). However, an exemption was granted within the scope of internal reorganization of companies belonging to a group. For that purpose, all the companies of the group had to be resident in the Netherlands, naturally including both the seller and the buyer of the property. The Netherlands tax authorities considered that tax was payable pursuant this transaction as it did not qualify for the exemption under applicable legislation. The CJ confirmed that the Netherlands legislation amounted to discrimination in breach of the freedom of establishment. In particular, it made reference to the less favourable treatment granted to the vendor "than if it had chosen the form of a public or private limited company instead of that of a permanent establishment for its business in the Netherlands."[1135]

Later, and involving the UK group relief system, the *Philips Electronics UK* case, concerned the issue that the UK legislation barred the surrender of the losses of a UK PE whereas no such bar existed for UK losses of a UK resident company.
For UK corporation tax purposes, a PE of a foreign company is taxed as it were a UK resident company. Therefore, and following the above case law the argument would be that, if the UK legislation treats them as comparable, if a domestic company can be included as parent company of a group the same should apply for a PE of a foreign company. Otherwise that would constitute a breach of the freedom of establishment as regards the

[1133] For an analysis of this case, see J.D.B. Oliver, "Entitlement of a permanent to third state treaty benefits: Saint Gobain", *British Tax Review* 3 (2000), pp. 174-181, Hans van den Hurk, "Did the ECJ's decision in Saint-Gobain change international tax law?", 55 *Bulletin for international fiscal documentation* 4 (2001) pp. 152-157, A. P. Dourado, "From Saint Gobain to the Metallgesellschaft case: scope of non-discrimination of permanent establishments in the EC Treaty and the most-favoured-nation clause in EC Member States tax treaties", 11 *EC Tax Review* 3 (2002), pp. 147-156
[1134] See ECJ 12 April 1994, C-1/93 *Halliburton v Staatssecretaris van Financien*. For a further analysis of this case considering also its tax treaty issues, see *infra* 11.3.3.
[1135] See ECJ 12 April 1994, C-1/93 *Halliburton v Staatssecretaris van Financien*, para. 19.

freedom to choose the appropriate legal form. That was precisely the conclusion reached by the Court. Although not using the same comparability test as in previous case law – similar tax treatment between subsidiaries and PEs – the CJ reached the same outcome by looking at the aim pursued by the national provisions at stake and considering that:[1136]

> "[…] situation of a non-resident company with only a permanent establishment in the national territory and that of a resident company are, having regard to the objective of a tax regime such as that at issue in the main proceedings, objectively comparable in so far as concerns the possibility of transferring by means of group relief losses sustained in the United Kingdom to another company in that group."

Differently, in Home State situations the CJ follows a different approach and constantly rejects such type of horizontal comparison. An example can be found in the *Columbus Container* case[1137] where it is clear that only a vertical comparison is relevant:

> "[…] it must be recalled that the fiscal autonomy referred to in paragraphs 44 and 51 of this judgment also means that the Member States are at liberty to determine the conditions and the level of taxation for different types of establishments chosen by national companies or partnerships operating abroad, on condition that those companies or partnerships are not treated in a manner that is discriminatory in comparison with comparable national establishments."

In other words, this means that a foreign subsidiary and a foreign PE may be treated differently provided that there is no discrimination when compared with a purely domestic situation.[1138] This same difference was reiterated and developed by the CJ in *the X Holding* case when stating[1139] that:

> "38. Permanent establishments situated in another Member State and non-resident subsidiaries are not in a comparable situation with regard to the allocation of the power of taxation as provided for in an agreement such as the Double Taxation Agreement, and in particular in Articles 7(1) and 23(2) thereof. Whereas a subsidiary, as an independent legal person, is subject to unlimited tax liability in the State party to such an agreement in which that subsidiary is established, the same does not apply in the case of a permanent establishment situated in another Member State, which remains in principle and in part subject to the fiscal jurisdiction of the Member State of origin.
>
> 39. It is, admittedly, true that the Court has held in other cases that the second sentence of the first paragraph of Article 43 EC leaves traders free to choose the appropriate legal form in which to pursue their activities in another Member State and that freedom of choice must not be limited by discriminatory tax provisions (see, to that effect, Commission v

[1136] CJ 6 September 2012, C-18/11 *The Commissioners for Her Majesty's Revenue & Customs v Philips Electronics UK Ltd*, para. 18

[1137] ECJ 6 December 2007, Case C-298/05, *Columbus Container Services BVBA & Co. v Finanzamt Bielefeld-Innenstadt*, para. 53. Similarly ECJ 9 June 2009, Joined Cases C-439/07 and C-499/07, *Belgische Staat v KBC Bank NV (C-439/07) and Beleggen, Risicokapitaal, Beheer NV v Belgische Staat (C-499/07)*, para. 80

[1138] See Dennis Weber, "Eight Points as to Why the X Holding Judgment is Incorrect" in D. Weber & B. da Silva (eds.), *From Marks & Spencer to X Holding: The Future of Cross-Border Group Taxation*, Kluwer Law International BV, The Netherlands (2011), p. 34.

[1139] See CJ 25 February 2010, C-337/08, *X Holding BV v Staatssecretaris van Financiën*, paras. 38-41.

France, paragraph 22; Oy AA, paragraph 40; and Case C-253/03 CLT-UFA [2006] ECR I-1831, paragraph 14).

40. However, the Member State of origin remains at liberty to determine the conditions and level of taxation for different types of establishments chosen by national companies operating abroad, on condition that those companies are not treated in a manner that is discriminatory in comparison with comparable national establishments (Case C-298/05 Columbus Container Services [2007] ECR I-10451, paragraphs 51 and 53). As permanent establishments situated in another Member State and non-resident subsidiaries are not, as has been stated in paragraph 38 of the present judgment, in a comparable situation with regard to the allocation of the power of taxation, the Member State of origin is not obliged to apply the same tax scheme to non-resident subsidiaries as that which it applies to foreign permanent establishments.

41. Accordingly, in a situation such as that at issue in the main proceedings, in which the tax advantage concerned lies in the possibility granted to resident parent companies and their resident subsidiaries to be taxed as if they formed a single tax entity, any extension of that advantage to cross-border situations would, as has been indicated in paragraph 32 of this judgment, have the effect of allowing parent companies to choose freely the Member State in which the losses of their non-resident subsidiary are to be taken into account (see, by way of analogy, Oy AA, paragraph 64)."

While in general the conclusions reached by the CJ of rejecting a similar treatment to both foreign branches and foreign PEs may be accepted, or that the State of origin does not need to treat both legal forms in the same way, the point which is relevant for this study is whether foreign subsidiaries should be assimilated to foreign PEs considering that the aim and effect of group taxation regimes is indeed to assimilate a group of taxpayers as a single taxpayer. It should be stressed that group taxation regimes constitute precisely an exception by disregarding the legal personality of companies which are members of the group treating them as a single entity. In that sense, the special rules make comparable situations – by deeming subsidiaries as PEs - which typically, in general, are not comparable. This means of course that it is incorrect for the purposes of group taxation regime to make a general comparison of PEs and subsidiaries. The comparability exists indeed in order to treat subsidiaries as PEs but for the purposes of particular tax rules.[1140] And the existing comparability in any event arises only to a limit extent: the degree of integration or consolidation which is provided by the specific tax rules of the group taxation regime under analysis.[1141] In clear terms: it is within the specific legal context of the rules on group taxation which constitute an exception to the general rules of treating each company separately for tax purposes, having the aim and effect of treating to a minor or greater

[1140] See Daniel Gutman "The Marks & Spencer case: proposals for an alternative way of reasoning", *EC Tax Review* 2003/3, p. 158.
[1141] As analysed in Part I of this study, there are different types of group taxation regimes which provide for different degrees of consolidation and therefore different consequences.

extend subsidiaries as PEs, that the comparability between foreign subsidiaries to foreign PEs may in certain circumstances[1142] arise.

Actually the comparability between a foreign subsidiary and a foreign PE from a Home State perspective is not totally absent in the CJ case law. Concretely in *Lidl Belgium* the Court assimilated a foreign PE to a foreign subsidiary when stating that:

> "19. Even though, according to their wording, the provisions of the EC Treaty concerning freedom of establishment are directed to ensuring that foreign nationals and companies are treated in the host Member State in the same way as nationals of that State, they also prohibit the Member State of origin from hindering the establishment in another Member State of one of its nationals or of a company incorporated under its legislation (see, inter alia, Case C-264/96 *ICI* [1998] ECR I-4695, paragraph 21, and Case C-298/05 *Columbus Container Services* [2007] ECR I-0000, paragraph 33).
>
> 20. Those <u>considerations also apply where a company established in a Member State carries on business in another Member State through a permanent establishment</u>.
>
> 21. Indeed, and <u>as is shown by the provisions of the Convention, a permanent establishment constitutes, under tax convention law, an autonomous entity</u>. Thus, those to whom the Convention applies comprise, in accordance with Article 2 of the Convention, not only natural and legal persons, but also all those types of permanent establishment which are listed in the second subparagraph, point (a), of the first paragraph of Article 2, in a manner which distinguishes them from other categories of entity listed in the second subparagraph, point (b), of that article, which are excluded from the definition of permanent establishment under the Convention.
>
> 22. <u>That definition of a permanent establishment as an autonomous fiscal entity is consonant with international legal practice</u> as reflected in the model tax convention drawn up by the Organisation for Economic Cooperation and Development (OECD), in particular Articles 5 and 7 thereof […]."[underscore BdS]

From my reading of those paragraphs, the CJ is considering that due to aim and effects of the provisions of a tax treaty, a foreign PE may be equated to a foreign subsidiary as the applicable rules – those of a tax treaty - lead to the profits of the PE being exempt from tax in the State of the head office reaching a similar effect as it would be a foreign subsidiary: no taxation of its profits.

Also AG Maduro in his Opinion[1143] in the *Marks & Spencer* case saw a possibility to compare foreign subsidiaries ad PEs:

> "In the present case foreign subsidiaries and branches are indeed governed by different tax regimes. However, that difference in treatment is not due solely to the fact that they

[1142] The qualifying statement of my analysis "in certain circumstances" is because such comparison will be dependent on the characteristics of the group taxation regime at stake, as analysed in more detail below.

[1143] See Opinion of AG Poiares Maduro in Case C-446/03, *Marks & Spencer plc v David Halsey (HM Inspector of Taxes)*, delivered on 7 April 2005, para. 48.

> are subject to different tax obligations but to the United Kingdom system of corporate taxation. Under that system the difference in tax treatment is determined by the legal form of the secondary establishment. Groups of companies are not entitled to consolidation for tax purposes which applies to the income of permanent establishments. In that connection, although the group relief system modifies the rule of separate taxation of group companies, it cannot have the effect of assimilating the situation of subsidiaries to that of branches. Under that regime the transfer of losses is treated in a specific way. There is no consolidated joint taxation. That is because subsidiaries are always treated as independent legal and fiscal entities. Accordingly, the difference in treatment of those two categories of establishment does not merely comprise loss of a specific benefit as a result of the option being made in favour of the establishment of foreign subsidiaries. It stems from a difference in the tax regimes applicable to the different types of establishment."

In general, AG Maduro recognized the possibility to compare foreing subsidiaries to foreign PEs but rejected the comparison between a foreign subsidiary and a foreign PE in case of *Marks & Spencer* due to the particularities of the UK group relief system:

i. the UK group relief system did not involve full consolidation. The special treatment of subsidiaries was only applicable to transfer of losses while in the case of PEs there was income tax consolidation
ii. the subsidiaries remained being treated as independent entities for tax purposes and, accordingly, the situation of subsidiaries and branches was not comparable. Therefore it has been suggested to make a careful application of the Marks & Spencer judgment to other group taxation systems[1144], notably for cases in which the group taxation regime modifies the separate taxation of rule of separate taxation of companies having the effect of assimilating subsidiaries to PEs.

The opportunity to perform such comparison arose potentially with the *X Holding* case. Different to the UK group relief system, under the Netherlands fiscal unity the subsidiaries included within the group loosetheir independence for tax purposes leading precisely to what AG Maduro referred to *assimilating the situation of subsidiaries to that of branches* and to a form of *consolidated joint taxation*. In other words, the effect of the Netherlands fiscal unity is that in a pure domestic situation, subsidiaries and PEs are treated alike for tax purposes. This was clearly acknowledged by the Court[1145] when observing that the purpose of the Netherlands system was to allow:

> "[…] resident parent companies and their resident subsidiaries to be taxed as if they formed a single tax entity, that is to say, to be subject to a tax integration scheme, constitutes an advantage for the companies concerned. That scheme allows, in particular, for the profits and losses of the companies constituting the tax entity to be consolidated at the level of the parent company and for the transactions carried out within the group to remain neutral for tax purposes."

[1144] See Michael Lang, "The Marks & Spencer Case – The Open Issues Following the ECJ's Final Word", *European Taxation* 2, IBFD (2006), p. 56.
[1145] See CJ, 25 February 2010, C-337/08, *X Holding B.V. v Staatssecretaris van Financiën,* para. 18.

While a full consolidation was not possible for foreign subsidiaries, the fact is that they should have been compared to foreign PEs, as this is the effect provided for the consolidation under the respective domestic tax law.

Therefore, it is submitted that the CJ argumentation in *X Holding* is simply incorrect when it rejected the argument of treating foreign subsidiaries as foreign PEs. The erroneous interpretation performed by the CJ starts by ignoring its previous assumption that the consolidation under the Netherlands fiscal unity aims at treating all the companies of a group as a *single tax entity*,[1146] meaning that a domestic subsidiary is no longer treated for tax purposes as an independent person but it becomes materially identical to a PE. The Court rejects a horizontal comparison and simply considers that foreign subsidiaries and foreign PEs are not comparable and do not require the same treatment as long as they are not treated differently from their domestic counterparts. The CJ appears to build its reasoning on a general argument that non-consolidated subsidiaries are indeed treated differently from PEs.[1147] But again here, the question is not whether a foreign subsidiary is comparable in every aspect to a foreign subsidiary. Rather, it looks at the effect of the domestic legislation and the CJ incorrectly does not take into account –because the Court develops all its reasoning ignoring the aims of the fiscal unity – the fact that pursuant to the fiscal unity, *consolidated subsidiaries* are *indeed treated as PEs*. In other words, ignores that the fiscal unity *has the effect of assimilating the situation of subsidiaries to that of branches*. The reasoning of the CJ, in itself, is also inconsistent: while the CJ looks at the aim of the legislation in order to perform its comparability test between domestic and cross-border situations, such test is performed in a deficient way as it is partially ignored.[1148] The aim of the legislation is indeed to treat members of the group as a single tax entity and that is achieved by assimilating them to PEs.

Therefore, equating foreign subsidiaries to foreign PEs should be accepted in certain cases in the field of group taxation regimes, whenever the aim and effects of those regimes leads in domestic situations to subsidiaries being treated alike to PEs as per effect of the specific tax rules of the group taxation.

[1146] See CJ, 25 February 2010, C-337/08, *X Holding B.V. v Staatssecretaris van Financiën,* paras. 18 and 24.

[1147] Therefore, the fact appears to be irrelevant that in its reasoning, the CJ makes reference to its judgment in the *Columbus Container Services* case, as this case did not involve such a situation as in *X Holding* where the legislation at stake leads to an assimilation of subsidiaries to PEs. See in this regard the second Opinion of AG Wattel delivered on 7 July 2010, Hoge Raad no. 43484 bis *X Holding BV v Staatssecretaris van Financiën*, para. 3.19.

[1148] Concurrently, see Servaas van Thiel, "X Holding: A Denial of Justice", in Dennis Weber & Bruno da Silva (eds.), *From Marks & Spencer to X Holding: The Future of Cross-Border Group Taxation*, EUCOTAX Series no. 29, Kluwer Law International BV, The Netherlands (2011), pp. 62-63.

15.5 Interim conclusions

In order to assess whether a specific tax measure is discriminatory, the CJ engages in a comparability test. When it comes to the comparability standard, it is apparent in examining the case law that there is no homogeneous approach which leads to uncertainty of what constitutes a breach of EU law. In the first stages of direct tax cases, the Court stated that residents and non-residents were not generally comparable but became comparable by virtue of exercising their taxing rights over them – compressibility through taxation.

The development of the case law throughout the years has led to establishing comparability predominantly as regards the aim of the measure tested against the fundamental freedoms. In this approach, the Court looks at the objective pursued by the national legislation and ascertains whether, in light of this objective, it is sensible to make a distinction between domestic and cross-border situations. This is also the most common approach when the Court engages in comparability when assessing domestic group taxation regimes. However, even here there is some uncertainty surrounding the Court's approach. In some cases, the Court did not engage in comparability at all whereas in others, it established comparability based on the intention of the taxpayer to benefit from a particular tax provision.

The different approaches followed by the Court are undesirable because they reveal inconsistency and lead to uncertainty as to the choice of the appropriate comparator. In addition, the fact that the Court follows a broad approach for determining the existence of discriminatory treatment – often performing the comparison at the level of justifications – implies that there is a shifting of the burden to the Member States, which have to demonstrate the existence of reasons that justify an otherwise discriminatory tax measure.

From the perspective of group taxation regimes, the Court's analysis is no different. Predominantly (although not exclusively) the CJ looks at the aim of the legislation at stake as to determine the existence of discriminatory treatment.

For the purposes of determining the relevant comparator, the Court engages in a vertical comparison: the treatment of purely domestic groups as compared to cross-border groups. The existence of a discriminatory treatment arises as from the moment that the benefits of a tax group are available domestically but not cross-border. Conceptually, the CJ approach is understandable from an internal market perspective but open to criticism when considering the interaction between the respect of the Member States' tax sovereignty and the scope of application of the fundamental freedoms. As from the moment that the Court considers that a Member State must take into account the results (for example, losses) of a separate taxpayer resident in another Member State, it is in fact imposing the assertion of jurisdiction over that taxpayer.

Another relevant aspect as regards comparability within the context of tax groups is whether the CJ should accept – in certain cases – a horizontal comparison, meaning in this

case to compare subsidiaries with PEs. The CJ accepts this standard of comparison from a Host State perspective (which, in fact, can be traced back to the earlier status of the CJ case law on direct taxation) while rejecting such comparison from the perspective of the Home State. The Court's argument is that foreign PEs and foreign subsidiaries are different as regards the powers to tax of the Home Member State. In abstract, this argument is entirely correct but the CJ in this case appears to ignore the aim and effects of the some group taxation regimes which assimilate subsidiaries to PEs which would precisely make such comparison possible.

Chapter 16

The justifications

16.1 Introduction

Taxpayers may rely on the applicable fundamental freedoms in order to challenge discriminatory tax legislation. Traditionally, the rights granted by the freedoms have been broadly interpreted but as a counterweight, EU law provided the opportunity that, exceptionally, incompatible EU law rules may be maintained if the measures at stake refer to express justifications for a breach of the freedoms in the TFEU or pursue a legitimate aim compatible with the Treaty. The implied category of derogations which Member States may make to qualify the fundamental freedoms is restricted to reasons which pursue an objective which is compatible with the TFEU, since it is only then that the provisions (considering the objective of public interest that it pursues) can take precedence over the fundamental freedoms. In other words, a breach of the fundamental freedoms occurs for the purposes of pursuing another accepted Treaty objective.[1149]
In the area of income tax, the Court has investigated practically all public interest justifications that have been argued by Member States. For that reason, the issue of justifications has become one of the most significant questions in direct tax cases before the CJ.[1150]

The CJ has traditionally rejected from the outset some justifications that are not considered to meet the mentioned criteria. For instance, the CJ has ruled that a less favourable treatment cannot be justified by a tax advantage granted in another respect.[1151] Similarly, the lack of harmonization of national income tax laws has not been accepted as a justification.[1152] And the CJ has also never recognized the loss of tax revenue[1153] as an overriding reason of public interest.[1154]

[1149] See ECJ 15 May 1997, C-250/97 *Futura Participations SA and Singer v Administration des contributions*, para. 26.
[1150] See Philip Baker, "Transfer Pricing and Community Law: The SGI case", 38 *Intertax* 4 Kluwer Law International BV (2010), p. 195.
[1151] See cases ECJ 28 January 1986, C-270/83 *Commission v French Republic ("Avoir Fiscal")*, para. 21; ECJ 27 June 1996, C-107/94 *Asscher v Staatssecretaris van Financien*, para. 53; ECJ 21 September 1999, C-307/97 *Compagnie de Saint-Gobain Zweigniederlassung Deutschland v Finanzamt Aachen-Innenstadt*, para. 53; ECJ 26 October 1999, C-294/97 *Eurowings Luftverkhers AG v Finanzamt Dortmund-Unna*, paras. 43-45; ECJ 6 June 2000, C-35/98 *Staatssecretaris van Financien v Verkooijen*, para. 61; ECJ 26 June 2003, C-422/01 *Försäkringsaktiebolaget Skandia (publ) and Ola Ramstedt v Riksskatteverket*, para. 52; and CJ 1 July 2010, C-233/09 *Gerhard Dijkman, Maria Dijkman-Lavajeile v Belgische Staat* para. 41.
[1152] See cases ECJ 28 January 1986, C-270/83 *Commission v French Republic ("Avoir Fiscal")*, para. 21; and ECJ 26 January 1993, C-112/91 *Werner v Finanzamt Aachen-Innenestadt,* para. 11.

In this Chapter, I will start with an analysis of the justifications that have been most commonly invoked within the field of group taxation. Emphasis will be placed on determining the exact meaning of justification, whether they have been consistently applied by the CJ and if some of the accepted justifications overlap or have otherwise a different meaning. In addition, I will explore throughout this Chapter the (innovative) approach used by the Court since *Marks & Spencer* of using combined justifications. Therefore, I will also explore what is the value of each justification, if they can be accepted autonomously or only when combined with other justifications and whether the combined effect of justifications implies a different standard for its acceptance by the Court.

16.2 Relevant justifications

16.2.3 Effectiveness of fiscal supervision

An overriding reasons of general interest based on the "effectiveness of fiscal supervision" was one of the grounds for justifications listed by the Court back to the *Cassis de Dijon*

[1153] See, *inter alia*, cases CJ 10 April 2014, C-190/12 *Emerging Markets Series of DFA Investment Trust Company v Dyrektor Izby Skarbowej w Bydsgoszczy*, para. 102; CJ 20 October 2011, C-284/09 *European Commission v Republic of Germany*, para. 83; CJ 10 February 2011, Joined cases C-436/08 and C-437/08 *Haribo Lakritzen Hans Riegel BetriebsgmbH and Österreichische Salinen AG v Finanzamt Linz*, para. 126; CJ 22 December 2010, C-287/10 *Tankreederei I SA v Directeur de l"administration des contributions directes*, para. 27; ECJ 29 January 2009, C-318/07 *Heine Persche v Finanzamt Ludenscheid*, para. 46; ECJ 18 July 2007, C-182/06 *État du Grand Duchy of Luxemburg v Hans Ulrich Lakebrink and Katrin Peters-Lakebrink*, para. 24; ECJ 15 July 2004, C-315/02 *Anneliese Lenz v Finanzlandesdirektion für Tirol*, , para. 40; ECJ 26 June 2003, C-422/01 *Försäkringsaktiebolaget Skandia (publ) and Ola Ramstedt v Riksskatteverket*, para. 53; ECJ 11 March 2004, C-9/02 *Hughes de Lasteyrie du Saillant v Ministère de l"Économie, des Finances et de l"Industrie*, para. 60; ECJ 21 November 2002, C-436/00 *X and Y v Riksskatteverket*, para. 50; ECJ 3 October 2002, C-136/00 *Danner*, para. 56; ECJ 8 March 2001, Joined Cases C-397/98 and C-410/98 *Metallgesellschaft Ltd. v. The Commissioners of Inland Revenue and Hoechst v. Inland Revenue Commissioners*, para. 59; ECJ 6 June 2000, C-35/98 *Staatssecretaris van Financien v Verkooijen*, para. 59; ECJ 21 September 1999, C-307/97 *Compagnie de Saint-Gobain v Finanzamt Aachen-Innenstadt*, para. 50; and ECJ 16 July 1998, C-264/96 *Imperial Chemical Industries pls v K. Hall Colmer (Her Majesty's Inspector of Taxes)*, p. 28

[1154] Differently See Philip Baker, "Protection of the Taxpayer by the European Court of Justice", *European Taxation* 10, IBFD (2004), p. 455, who urges the CJ to re-consider its previous case law and accept the protection of revenue as a valid justification. P. Baker refers to the fact that this justification was first rejected in non-tax cases and then the CJ followed the same approach to tax measures. According to Philip Baker, the CJ falls into an error by simply following its jurisprudence from another (non-tax) area and applying into the tax field. His argument relies on the fact that above all a national tax measure precisely protects national revenue. Therefore, such justification should be accepted but subject to being suitable and proportional, i.e., it should be tested whether the measure protects national tax revenue without interfering with the enjoyments of the fundamental freedoms more than strictly necessary. Similarly see also Anthony Arnull et al. *Wyatt & Dashwood's European Union Law*, 5th Edition (2009) Thomson/Sweet & Maxwell, pp. 903-906.

case.[1155] This justification is related to compliance requirements namely reporting of a certain tax unit regarding the assessment and collection of tax (e.g. the quantum of tax, quantifying profits and losses, certain requirements in order to have access to a particular tax benefit, inspection of accounts, etc).

While the Court has accepted this reason as being able to justify a restriction on the fundamental freedoms,[1156] it has however established strict proportionality requirements. The consequence is that, while being recognized as a legitimate objective the need to safeguard the effectiveness of fiscal supervision cannot be an accepted discrimination whenever Member States have less restrictive means to overcome their administrative challenges notably by requesting the taxpayer to supply information or the possibility of Member States to exchange information with each other.[1157] An illustrative example can be found in *Futura,*[1158] where the Court concluded that:

> "Under Directive 77/799 the competent authorities of a Member State may always request the competent authorities of another Member State to provide them with all the information enabling them to ascertain, in relation to the legislation which they have to apply, the correct amount of revenue tax payable by a taxpayer having his residence in that other Member State."

Conversely, the Court allows a different tax treatment when in a particular case a country is not bound under agreement to provide information and it proves impossible to obtain such information from that country.[1159] An example can be found in *Établissements Rimbaud*[1160]

[1155] ECJ 20 February 1979, 120/78 *Rewe-Zentral AG v Bundesmonopolverwaltung für Branntwein ("Cassis de Dijon")*.

[1156] See, *inter alia*, cases CJ 10 April 2014, C-190/12 *Emerging Markets Series of DFA Investment Trust Company v Dyrektor Izby Skarbowej w Bydgoszczy*, para. 71; CJ 6 October 2011, C-493/09 *European Commission v Portuguese Republic,* para. 42; and CJ 1 July 2010, C-233/09 *Gerhard Dijkman, Maria Dijkman-Lavajeile v Belgische Staat*, para. 58; ECJ 11 June 2009, Joined cases C-155/08 and C-157/08, *X and E.H.A. Passenheim-van Schoot v Staatssecretaris van Financien*, para. 45; ECJ 18 December 2007, *Skatteverket v A,* para. 55; ECJ 14 September 2006, C-386/04 *Centro di Musicologia Walter Stauffer v Finanzamt München für Körperschaften*, para. 47; ECJ 15 May 1997, C-250/95 *Futura Participations SA and Singer v Administration des contributions*, para. 31.

[1157] See, *inter alia*, cases ECJ 18 December 2007, *Skatteverket v A*, para. 56; ECJ 14 September 2006, C-386/04 *Centro di Musicologia Walter Stauffer v Finanzamt München für Körperschaften*, paras. 48-50; ECJ 10 March 2005, C-39/04 *Laboratoirs Fournier SA v. Direction des V érifications Nationales et Internationales*, paras. 22-26; ECJ 7 September 2004, C-319/02 *Petri Manninen*, paras. 50-55; ECJ 7 September 2004, C-334/02 *Commission v French Republic*, paras. 29-34; ECJ 12 December 2002, C-324/00 *Lankhorst-Hohorst GmbH v Finanzamt Steinfurt*, para. 44; ECJ 21 November 2002, C-435/00 *X and Y v Riksskatteverket*, paras. 61-63; ECJ 28 October 1999, C-55/98 *Skatteministeriet v Bent Vestergaard*, paras. 25-28; ECJ 8 July 1999, C-254/97 *Société Baxter, B. Braun Médical SA, Société Fresenius France and Laboratoires Bristol-Myers-Squibb SA v Premier Ministre, Ministère du Travail et des Affaires sociales, Ministère de l"Economie et des Finances and Ministère de l"Agriculture, de la Pêche et de l"Alimentation*, paras. 18-21; and ECJ 28 January 1992, C-204/90 *Hanns-Martin Bachmann v Belgian State*, paras. 18-20.

[1158] ECJ 15 May 1997, C-250/95 *Futura Participations SA and Singer v Administration des contributions*, para. 41.

[1159] ECJ 18 December 2007, *Skatteverket v A*, para. 63; CJ 10 February 2011, Joined Cases C-436/08 and C-437/08, *Haribo Lakritzen Hans Riegel BetriebsgmbH and Österreichische Salinen AG v Finanzamt Linz*, para. 67; CJ 19 July 2012, C-48/11 *Veronsaajien oikeudenvalvontayksikkö v A Oy*, para. 36; CJ 17 October 2013,

where the Court accepted the justification of the need to protect the effectiveness of fiscal supervision because:

> "50. […] in case of a taxpayer in circumstances such as those of the case before the referring court, which are characterised by the lack of any obligation on the tax authorities of the Principality of Liechtenstein to lend assistance.
> 51. In those circumstances, legislation such as that at issue in the main proceedings must be regarded as justified, vis-à-vis a country which is party to the EEA Agreement, for overriding reasons relating to the general interest in combating tax evasion and the need to safeguard the effectiveness of fiscal supervision, and as appropriate to ensuring the attainment of the objective pursued, without going beyond what is necessary to attain that objective." [Underscore BdS]

Therefore, the CJ considers lack of information is not an accepted justification[1161] where it may be remedied by existing mechanisms on exchange of information, either the Mutual Assistance Directive,[1162] existing treaties with a clause on exchange of information[1163] or any other agreement which contains information exchange mechanisms which are sufficient to enable the authorities of a Member State to verify and check whether the conditions required by its national legislation are met in order to apply a particular tax regime.[1164]

16.2.2 Principle of territoriality

The principle of territoriality is a commonly invoked justification for a breach to the fundamental freedoms by Member States. The first judgment where the Court introduced the reference to the principle of territoriality was in *Futura Participations*[1165]. It appeared not as a justification to a discriminatory measure but rather as a principle that does not

---

C-181/12 *Yvon Welte v Finanzamt Velbert*, para. 63; and CJ 10 April 2014, C-190/12 *Emerging Markets Series of DFA Investment Trust Company v Dyrektor Izby Skarbowej w Bydgoszczy*, para. 84.

[1160] CJ 28 October 2010, C-72/09 *Établissements Rimbaud SA v Directeur général des impôts and Directeur des services fiscaux d"Aix-en-Provence*, paras. 50-51.

[1161] See *inter alia*, cases ECJ 14 September 2006, C-386/04 *Centro di Musicologia Walter Stauffer v Finanzamt München für Körperschaften*, para. 50; ECJ 26 June 2003, C-422/02 *Försäkringsaktiebolaget Skandia (publ) and Ola Ramstedt v Riksskatteverket*, para. 42; ECJ 3 October 2002, C-136/00 *Rolf Dieter Danner*, para. 49; ECJ 28 October 1999, C-55/98 *Skatteministeriet v Bent Vestergaard*, para. 26; ECJ 11 August 1995, C-80/94 *G. H. E. J. Wielockx v Inspecteur der Directe Belastingen*, para. 26; ECJ 28 January 1992, C-204/90 *Hanns-Martin Bachmann v Belgian State*, para. 18; and ECJ 28 January 1992, C-300/90 *Commission of the European Communities v Kingdom of Belgium*, para. 20.

[1162] Council Directive 2011/16/EU of 15 February 2011 *on administrative cooperation in the field of taxation* (repealing Directive 77/799/EEC).

[1163] See cases CJ 10 April 2014, C-190/12 *Emerging Markets Series of DFA Investment Trust Company v Dyrektor Izby Skarbowej w Bydgoszczy*, paras. 86-88; ECJ 19 November 2009, C-540/07 *Commission of European Communities v Italian Republic*, para. 71. See also the Opinion of AG Kokott delivered on 16 July 2009 in case C-540/07 *Commission of European Communities v Italian Republic*, para. 79, clearly stating that measures are disproportionate in the case there is a tax treaty with a provision on exchange of information.

[1164] CJ 19 July 2012, C-48/11 *Veronsaajien oikeudenvalvontayksikkö v A Oy*, para. 37.

[1165] ECJ 15 May 1997, C-250/97, *Futura Participations SA and Singer v Administration des contributions*.

involve any discrimination, overt or covert, prohibited by the Treaty[1166]. In other words, in *Futura Participations*, the principle of territoriality described a set of rules outside of the scope of the TFEU[1167].

The CJ had the opportunity to further re-define the meaning of the principle of territoriality and its application as a justification within the scope of cross-border loss relief. First, in *Rewe Zentralfinanz*[1168], the CJ explained that:

> "68. As regards, lastly, the principle of territoriality, as recognised by the Court in paragraph 22 of the judgment in *Futura Participations and Singer*, it must be held that that principle is also not capable of justifying the national legislation at issue in the main proceedings.
>
> 69. It is true that, in accordance with that principle, the Member State in which a parent company is established may tax resident companies on the whole of their worldwide profits but may tax non-resident subsidiaries solely on the profits from their activities in that State (see, to that effect, *Marks & Spencer*, paragraph 39). However, such a principle does not in itself justify the Member State of residence of the parent company refusing to grant an advantage to that company on the ground that it does not tax the profits of its non-resident subsidiaries (see, to that effect, *Marks & Spencer*, paragraph 40). As the Advocate General stated at point 49 of his Opinion, the purpose of that principle is to establish, in the application of Community law, the need to take into account the limits on the Member States' powers of taxation. As regards the main proceedings, were the advantage claimed by Rewe to be granted, that would not result in a competing tax jurisdiction becoming involved. It concerns German-resident parent companies which are subject, in that respect, to unlimited liability to tax in that State. Accordingly, the legislation at issue in the main proceedings cannot be considered as an implementation of the principle of territoriality."

In *Rewe Zentralfinanz* the Court expressly referred to the meaning given to the principle of territoriality by AG Maduro in his Opinion[1169] which stated that:

> "The principle of territoriality for tax purposes was recognised by the Court in its judgment in *Futura Participations and Singer*. <u>That principle provides that the State concerned may tax parent companies resident on its territory on the whole of their worldwide profits but may tax non-resident subsidiaries solely on the profits from their activities in that State</u>. However, such a principle does not justify refusing an advantage to a resident parent company on the ground that the profits of its non-resident subsidiaries are not taxable. <u>The purpose of the principle is to establish, in the application of Community law, the need to take into account the limits on the powers of taxation of the Member States</u>. In the case of *Futura Participations and Singer*, the Member State concerned could not be required to take foreign losses into account because those losses were connected with non-resident

[1166] See ECJ 15 May 1997, C-250/97, *Futura Participations SA and Singer v Administration des contributions*, para. 22.

[1167] See P.J. Wattel, "Fiscal Cohesion, Fiscal Territoriality and Preservation of the (Balanced) Allocation of Taxing Power; What is the Difference?", in *The Influence of European Law on Direct Taxation: Recent and Future Developments*, ed. Dennis Weber (EUCOTAX, Kluwer Law International, 2007), p. 149 or Sjoerd Douma, *Optimization of Tax Sovereignty and Free Movement*, IBFD Doctoral Series no. 21 (2011), p. 197.

[1168] See ECJ 29 March 2007, C-347/04, *Rewe Zentralfinanz eG v Finanzamt Köln-Mitte*, paras. 68-69.

[1169] Opinion of AG Maduro delivered on 31 May 2006 in case C-347/04, *Rewe Zentralfinanz eG, v Finanzamt Köln -Mitte*, para. 49.

> taxpayers' income from a foreign source. That is not the situation in the present case. In this case, granting the advantage does not call into question the exercise of a competing tax jurisdiction. It concerns parent companies resident in Germany which are subject, as such, to unlimited tax liability in that country. There is consequently no justification for refusing that advantage."[Underscore BdS]

And later in case *Busley and Cibrian Fernandez*[1170] the CJ held that:

> "[…] that principle [of territoriality], the purpose of which is to establish, in the application of Community law, the need to take into account the limits on the Member States' powers of taxation, does not preclude the taking into account by a person liable to unlimited taxation in a Member State of negative income from an immovable property situated in another State […]. Consequently, that provision – by virtue of which the applicants in the main proceedings, who are liable to unlimited taxation in Germany, are unable to take into account losses from their house in Spain – cannot be considered as an implementation of the principle of territoriality."

The principle of territoriality in international tax law commonly refers to the limitation of the tax base regarding income sourced in a State's territory while the taxation of worldwide profits is referred as worldwide taxation.[1171] In other words: territoriality is used as an antonym to worldwide taxation. Differently, the principle of territoriality - referred by the CJ as the *powers of taxation of a Member State* - comprises both the taxation of resident taxpayers on their worldwide income as well taxation of non-resident taxpayers on their income sourced in that State. With this meaning, the CJ's reasoning is based on an understanding of territoriality as used in international law and not on the common meaning in international tax law.[1172] By linking the principle of territoriality with the limits of the Member State's powers to tax,[1173] the CJ is referring to a meaning of territoriality related to the jurisdictional limits set by international law.

This meaning given to the principle of territoriality supports the conclusion[1174] as to why the Court accepts that in principle non-residents (for example, permanent establishments) are taxed only on income from domestic sources without the need to take into account foreign losses regarding, that is, even if the worldwide profit is lower while a similar reasoning is not accepted in case of taxation of residents. In its reasoning, the CJ draws a different consequence depending on the jurisdictional capacity in which a Member State is acting in

---

[1170] See ECJ, 15 October 2009, Case C-35/08, *Grundstücksgemeinschaft Busley and Cibrian Fernandez v Finanzamt Stuttgart-Körperschaften*, para. 30.

[1171] See Klaus Vogel, "Worldwide v source taxation of income – A review and re-evaluation of arguments (Part 1)", *Intertax* 8/9 Kluwer Law International BV (1988), pp. 216-217.

[1172] See Otto Marres, "The Principle of Territoriality and Cross-Border Loss Compensation", 39 *Intertax* 3 Kluwer Law International BV (2011), p. 114 and 119.

[1173] Similarly, see Schön, who states that territoriality is a mere constraint of the taxing powers of a Member State. See Wolfgang Schön, "Neutrality and Territoriality – Competing or Converging Concepts in European Tax Law?", 69 *Bulletin for International Taxation* 4/5 IBFD 2015, p. 280.

[1174] See Otto Marres, "The Principle of Territoriality and Cross-Border Loss Compensation", 39 *Intertax* 3 Kluwer Law International BV (2011), p. 114 and 119.

a particular case. In the case it is acting in Home State capacity a State has worldwide tax jurisdiction whereas if it is acting as a Host State capacity, it has territorial tax jurisdiction. Consequently, as the nature of the tax jurisdiction is different, the obligations of the State are also different[1175]. In both cases, the Court refers to that jurisdiction to tax as principle of territoriality[1176]. This dichotomy established in the CJ's reasoning relies on the recognition of the restrictions imposed by international law to the tax jurisdictions concerning the taxation of non-residents[1177]. That is why in *Futura Participations* the Court concludes that there is no discrimination in the first place because a Member State does not take into account the foreign losses of a non-resident taxpayer. There is lack of comparability in the first place because taxation of the PE was entirely based on the domestic source income and could never have effect on foreign sources. Therefore, losses can only be deducted by non-residents in the case they have economic allegiance with the activities carried out within a certain jurisdiction[1178].

However, there is no customary international law that limits the taxation of residents' cross-border activities. In other words, the fact that resident taxpayers cannot deduct foreign losses may constitute a breach of the fundamental freedoms. Therefore, in the case of a claim made by a resident taxpayer, the principle of unlimited taxation – as a reflection of the principle of (international law) territoriality appears for the CJ as a reason not to reject, from the outset, granting cross-border loss relief in the same terms. This may be explained by the fact that the Court is guided by the implementation of the single market principle and, therefore, the idea that income sourced outside a Member State of origin is treated as foreign income is not followed by the Court. Again, it is proper to remind that the limitation of tax jurisdiction as such falls within the competences of Member States and it is (merely) the exercise of such competences that should be compliant with EU law. In other words, if a Member State acting in its capacity as Home State has divided its tax base in order to

[1175] Similarly See Dennis Weber, "In Search of a (New) Equilibrium between Tax Sovereignty and the Freedom of Movement within the EC", 34 *Intertax* 12 (2006), p. 610. Weber notes precisely that the CJ accepts the principle of territoriality for the taxation of non-residents but appears to overturn this principle (as understood for tax purposes) for the taxation of resident taxpayers.

[1176] A different explanation is provided by Wolfgang Schön, "Loosing Out at the Snooker Table: Cross-Border Loss Compensation for PE´s and the Fundamental Freedoms", in L. Hinnekens and P. Hinnekens (eds.) *A Vision Within and Outside the European Borders, Festschrift in honor of Frans Vanistendael* Kluwer Law International p. 978. According to Schön, the difference may derive from the fact that the CJ accepts, in general, the territorial limitation of the taxation of non-residents based on the "benefit principle" while taxation of residents under the "ability-to-pay" implies that territorial distinctions are considered artificial and do not comply by, itself, with the fundamental freedoms. However this explanation is a mere consequence of the different capacity that a Member State is acting, i.e. Home State (in which the ability-to-pay considerations are relevant) or Source State (taxation under the benefit principle).

[1177] See Joachim Englisch, "The European Treaties Implications for Direct Taxes", 33 *Intertax* 8/9 Kluwer Law International (2005), p. 330.

[1178] This also derives from reasoning in case *Centro Equestre da Lezíria* in which the Court reaffirmed the principle of territoriality in the taxation of non-residents and referred that (only) directly connected cost related with the activity may be taken into account in the taxation of non-residents. See ECJ 15 February 2007, C-345/04, *Centro Equestre da Lezíria Grande Lda v Bundesamt fur Finanzen*, paras. 22-24.

include foreign-source income, it must not discriminate between foreign and domestic source income. But if it has divided its tax base in order to limit its tax jurisdiction to domestic source income then it is, in principle, consistent with EU law to not take into account the foreign source income in assessing its residents "tax", which is naturally the granting of loss relief. The different understanding about the meaning of the principle of territoriality by the CJ ends up not taking into account the Member States competences in defining their tax base and, accordingly, erodes their tax sovereignty. This is because territoriality cannot be understood as requiring a Member State to extend its taxing powers regarding other taxpayers in other Member States. It should rather be conceived and interpreted within the tax sovereignty of each Member State and whether the limits provided in the respective Member State's rules justify a difference in treatment between domestic and cross-border situations.

16.2.3 Coherence of Tax System

The justification based on the need to preserve the coherence of the tax system was first introduced in the *Bachmann*[1179] case. The case concerned to Mr Bachmann which was a German national resident and working in Belgium. He concluded insurance with a company established in Germany and claimed the deduction of the premiums in Belgium contributed to that insurance. That claim was rejected by the Belgium authorities based on the existing tax rules applicable at the time that limited the deduction to payments made in Belgium. The CJ accepted the difference in treatment based on the need to preserve the coherence of the tax system: deduction of the premiums was dependent on the taxation of the of the sums paid by the insurer. In other words a Member States allows a deduction for the premium contributions if it has the possibility to tax the related payment in a subsequent date. Otherwise the cohesion of the tax system – a deduction compensated by the subsequent taxation – is jeopardized and a Member State can refuse the deduction.

From the above it can be derived that the Court has acknowledged the possibility of a Member State to apply a restrictive measure if it is systematically linked to a subsequent measure that neutralizes its restrictive effect.[1180] Inherent to the acceptance of this justification has been the need to maintain the internal logic of the tax system.[1181] In this sense the Court[1182] has considered that it can successfully be invoked if there is a direct link,

---

[1179] See ECJ 28 January 1992, C-204/90 *Hanns-Martin Bachmann v Belgian State*.

[1180] Servaas van Thiel in "The Direct Income Tax Case Law of the European Court of Justice: Past Trends and Future Developments, 62 *Tax Law Review*, p. 170.

[1181] See Julian Ghosh, *Principles of the Internal Market and Direct Taxation*, Key Haven Publications PLC (2007), p. 236.

[1182] See, inter alia, cases ECJ 6 June 2000, C-35/98, *Staatssecretaris van Financien v Verkooijen*; ECJ 14 November 1995, C-484/93 *Svensson and Gustavsson v Ministre du Logement et de l'Urbanisme*, para. 18; ECJ 16 July 1998, C-264/96, *Imperial Chemical Industries pls v K. Hall Colmer (Her Majesty's Inspector of Taxes),* para. 29; ECJ 18 September 2003, C-168/01, *Bosal Holding BV v Staatssecretaris van Financien*, paras. 29 and 30: ECJ 7 September 2004, C-319/02, *Petri Manninen*, para. 42; ECJ 23 February 2006, C-

in the case of one and the same taxpayer, between the grant of a tax advantage and the offsetting of that advantage by a fiscal levy, both of which are related to the same tax[1183]. Subsequently, the Court refined[1184] the concept of coherence of the tax system by considering that the direct nature of the link is to be examined in the lights of the aims and purpose of the national measure[1185]. The requirements set by the Court in order for a Member State to be able to successfully invoke this justification confirm the exceptional nature of this justification that cannot succeed in case a Member State is relying on it merely to protect its tax revenue.

AG Kokott in her Opinion in the *Manninen* case[1186] implied that the coherence of the tax system aims at achieving tax neutrality from a single country perspective when stating that:

> "The concept generally means no more than avoiding double taxation or ensuring that income is actually taxed, but only once (the principle of only-once taxation)."

The underlying idea of unilateral (one country) neutrality derives clearly from the statement of the CJ in *Emerging Markets* case: [1187]

> "An examination of the ground of tax coherence requires, in principle, an examination with regard to one and the same tax system."

AG Maduro also elaborated on the meaning of this justification in his Opinion[1188] in *Marks & Spencer* case by opining that:

> "66. The concept of fiscal cohesion performs an important corrective function in Community law. It serves to correct the effects of the extension of the Community freedoms to the tax systems whose organisation is in principle a matter for the sole

---

471/04, *Finanzamt Offenbach am Main-Land v Keller Holding GmbH*, para. 40; ECJ 23 October 2008, C-157/07 *Finanzamt für Körperschaften III in Berlin v. Krankenheim Ruhesitz am Wannsee-Seniorenheimstatt GmbH*, para. 42; CJ 1 December 2011, C-253/09 *European Commission v Republic of Hungary*, para. 76; CJ 10 April 2014, C-190/12, *Emerging Markets Series of DFA Investment Trut Company v Dyrektor Izby Skarbowej w Bydsgoszczy*, para. 92.

[1183] See concurrently, Peter J. Wattel, "Red Herrings in Direct Tax Cases before the ECJ", 31 *Legal Issues of Economic Integration* 2 (2004), p. 93.

[1184] See Dennis Weber, "An Analysis of the Past, Current and Future of the Coherence of the Tax System as Justification", *EC Tax Review* 2015/1, Kluwer Law International BV, p. 49.

[1185] See cases CJ 10 May 2012, Joined Cases C-338/11 to C-347/11, *Santander Asset Management SGIIC SA v Directeur des résidents à l'étranger et des services généraux and Santander Asset Management SGIIC SA and Others v Ministre du Budget, des Comptes publics, de la Fonction publique et de la Réforme de l'État*, para. 51: ECJ 19 June 2009, C303/07, *Aberdeen Property Fininvest Alpha Oy*, para. 72, ECJ, 28 February 2008, C-293/06, *Deutsche Shell GmbH v Finanzamt für Großunternehmen in Hamburg*, para. 39; ECJ 27 November 2008 C-418/07, *Société Papillon v Ministére du Budget, des Comptes Publics et de la Fonction Publique*, para. 44; ECJ 7 September 2004, C-319/02, *Petri Manninen*, para. 43, ECJ 11 March 2004, C-9/02, *Hughes de Lasteyrie du Saillant v Ministère de l'Économie, des Finances et de l'Industrie*, para 37.

[1186] See Opinion of AG Kokott delivered on 18 March 2004 in case C-319/02, *Petri Manninen*, para. 51.

[1187] CJ 10 April 2014, Case C-190/12, *Emerging Markets Series of DFA Investment Trust Company v Dyrektor Izby Skarbowej w Bydgoszczy*, para. 94.

[1188] See Opinion of AG Maduro delivered on 7 April 2005 C-446/03, Case C-446/03, *Marks & Spencer plc v David Halsey (Her Majesty's Inspector of Taxes)*, paras. 66-67.

> competence of the Member States. In fact, the application of the freedoms of movement has to be prevented from giving rise to unwarranted interference with the internal logic of national tax regimes. In the words of the Court, the conception of the tax system is 'a matter for each Member State'. In those circumstances, plainly, the Member States have a legitimate interest in ensuring the integrity and the equity of their tax systems. However, it does not follow that that concept can be used as an argument to be deployed against the objectives pursued in the context of the internal market. It cannot be accepted that a tax system be arranged in such a way as to favour national situations or traders. The function performed by fiscal cohesion is the protection of the integrity of the national tax systems provided that it does not impede the integration of those systems within the context of the internal market.
>
> 67. The delicate nature of this equilibrium may be conveyed by the idea of a twofold neutrality. On the one hand, the national tax rules must be neutral in regard to the exercise of the freedoms of movement. In that connection, it should be recal EC lays down a requirement of fiscal neutrality in regard to the establishment of undertakings in the Community. On the other hand, the exercise of the freedoms of movement must be as neutral as possible in regard to the tax arrangements adopted by the Member States. The right of establishment cannot be used by traders with the sole purpose of endangering the equilibrium and the cohesion of national tax systems. That would be the case if use were made thereof either abusively to evade national laws or artificially to exploit differences between those laws. The concept of fiscal cohesion seeks to ensure that Community nationals do not use Community provisions to secure advantages from them which are unconnected with the exercise of the freedoms of movement."

In this sense this justification based on coherence aims to ensure that the taxpayer is not entitled to enjoy the tax benefits in one State without the corresponding (or related) tax obligations[1189] therefore benefiting from unjustified privileges. It is a justification based mainly on a compensatory argument.[1190] A taxpayer could benefit from a certain advantage in one Member State and subsequently use his right of free movement to move to another Member State escaping the correspondent tax obligation temporarily forgone by granting the advantage. Therefore, the principle of fiscal cohesion is a necessary corrective which aims at reconciling, on one hand, the CJ discrimination approach with the national requirements of a tax system and, on the other, requirements which are based on taxpayer equity[1191].

The statement that most likely better clarifies[1192] the (different) aims of the justification based on the cohesion of the tax system may be found in the Opinion of AG La Pergola in *Verkooijen* case[1193] where it stated that:

[1189] See Wolfgang Schön, "Neutrality and Territoriality – Competing or Converging Concepts in European Tax Law?", 69 *Bulletin for International Taxation* 4/5 IBFD (2015), p. 279.

[1190] See Werner Haslehner, "Consistency" and Fundamental Freedoms: the case of Direct Taxation" , Common Market Law Review 50, Kluwer Law International (2013), p. 753.

[1191] See Joachim Englisch "Fiscal Cohesion in the Taxation of Cross-Border Dividends (Part Two), *European Taxation* 8 IBFD (2004), pp. 356-357.

[1192] See Frans Vanistendael, "Cohesion: the phoenix rises from his ashes", *EC Tax Review* 4 (2005), p. 217.

[1193] See second Opinion of AG La Pergola delivered on 14 December 1999, case C-35/98, Verkooijen, para. 7

> "[…] the legislature concerned must establish a specific link between the exemption the tax deduction, and the subjection to tax, offsetting one of these fiscal choices against the other so that the tax authorities can tax one and the same person at different times or in different ways, but always in respect to the same taxable assets or income and always in order to ensure that each taxpayer is treated in a consistent manner. [Underscore BdS]

The explanation of AG La Pergola reflects the fact that the cohesion of the tax system is indeed applicable within the framework of a national tax system regarding one taxpayer[1194].

Arguably in the *Manninen*[1195] case the CJ did not implicitly relaxed the conditions that two legally distinct taxpayers could be involved. However subsequently in cases such as *Fournier*[1196], *Krankenheim Ruhesitz*[1197], *Commission v Hungary*[1198], *K*[1199] and *F.E. Familienprivatstiftung*[1200] the CJ returned to his narrower meaning of cohesion of the tax system.

From the above it can also be derived from AG La Pergola that coherence of the tax system aims at achieving inter-personal equity by ensuring that taxpayers are treated in a consistent manner. An example of this may be found in the *Commission v Hungary*[1201] case where the fairness in the taxation of taxpayers underscore the acceptance by by the Court of the coherence of the tax system as a valid justification:

> "75 If taxpayers not having paid the tax at issue previously were able, under the tax regime at issue, to benefit from the tax advantage concerned, they would take unfair advantage of taxation that was not applicable to their previous purchase outside Hungary.
>
> 76 It follows that, under the tax regime in question, there is a direct link between the tax advantage granted and the initial levy. First, that advantage and the tax levy are applied to one and the same person and, second, they both relate to the same tax.
> […]

[1194] Concurrently, see Julian Ghosh, *Principles of the Internal Market and Direct Taxation*, Key Haven Publications PLC (2007), p. 240 or Wolfgang Schön, "Neutrality and Territoriality – Competing or Converging Concepts in European Tax Law?, 69 *Bulletin for International Taxation* 4/5, IBFD (2015), p. 279. Schön stresses the fact that the coherence of the tax system addressing the treatment of a taxpayer in a single jurisdiction is a self-evident example of the non-discrimination principle as applied from a per-country perspective.

[1195] ECJ 7 September 2004, C-319/02, *Petri Manninen*.

[1196] ECJ 10 March 2005, C-39/04, *Laboratoires Fournier SA v Direction des vérifications nationales et internationales*

[1197] ECJ 23 October 2008, C-157/07, *Finanzamt für Körperschaften III in Berlin v Krankenheim Ruhesitz am Wannsee-Seniorenheimstatt GmbH*

[1198] CJ 1 December 2011, C-253/09, *European Commission v Republic of Hungary*

[1199] CJ 7 November 2013, C-322/11, *K*.

[1200] CJ 17 September 2015, C-589/13, *F.E. Familienprivatstiftung Eisenstadt v Unabhängiger Finanzsenat, Außenstelle Wien*, para. 83.

[1201] CJ 1 December 2011, C-253/09, *European Commission v Republic of Hungary*, paras. 75-76,78.

> 78 In the light of the foregoing, it must be found that the restriction […] is justifiable by the need to preserve the coherence of the tax system."

The interpretation described above impacted the reasoning followed by the CJ in the context of group taxation. The most clear-cut example is the *Papillon* judgement[1202]. In this judgment, France brought forward as justification to exclude the possibility to constitute a group between a French parent company and its sub-subsidiary which had the intermediary link company located in another Member State, the need to preserve the coherence of the tax system. The French group taxation regime provided for consolidation of companies that involved, *inter alia*, the neutralization of the certain transactions between group members. In particular, in the case of losses recorded by the sub-subsidiary, the subsidiary would generally provide for the depreciation of its holding in that sub-subsidiary and the parent company would, as a result, provide for the depreciation of its holding in its subsidiary. Since those circumstances involve one and the same loss originating at the level of the sub-subsidiary, where each of those companies is subject to the tax integration regime, the neutralisation mechanism results in the provision for depreciation made by the parent company and the subsidiary being disregarded. However, in the case the intermediary subsidiary was a non-resident company, the losses recorded by the sub-subsidiary would be taken into account twice, first, in the form of the direct losses of that sub-subsidiary and, secondly, in the form of a provision made by the parent company for the depreciation of its holding in that subsidiary. The internal transactions would not be neutralised because the non-resident subsidiary is not subject to the tax integration regime. In this case, the CJ accepted this justification reflecting the understanding of this justification, in the sense that it refers to the framework of a national tax system regarding one taxpayer while simultaneously aimed at achieving tax equity by avoiding that a taxpayer could benefit from a double deduction of losses in the same jurisdiction.

Again a similar justification was raised in the subsequent case, *SCA Group Holding*[1203]. The reasoning brought forward by the Netherlands Government was factually identical to the one raised by France: consolidation between Netherlands companies with a foreign intermediary link and the possibility of obtaining a double deduction deriving both from direct loss utilization and the decrease in value of shareholdings in group companies. The CJ rejected the justification in this case, although arguably incorrectly.[1204] The argument

---

[1202] See ECJ 27 November 2008, C-418/07, *Société Papillon v Ministère du Budget, des Comptes publics et de la Fonction publique*, paras. 41-51.

[1203] CJ 12 June 2014, Joined Cases C-39/13, C-40/13 and C-41/13, *Inspecteur van de Belastingdienst Noord/kantoor Groningen v SCA Group Holding BV (C-39/13), X AG, X1 Holding GmbH, X2 Holding GmbH, X3 Holding BV, D1 BV, D2 BV, D3 BV, v Inspecteur van de Belastingdienst Amsterdam (C-40/13) and Inspecteur van de Belastingdienst Holland- Noord/kantoor Zaandam v MSA International Holdings BV, MSA Nederland BV (C-41/13).*

[1204] See CFE ECJ Task Force, "Opinion Statement ECJ-TF 4/2014 of the CFE on the decision of the European Court of Justice in *SCA Group Holding BV et al*. (Joined Cases C-39/13, C-40/13 and C-41/13), on the requirements to form a "fiscal unity", *European Taxation* 2/3 IBFD (2015), p. 120.

was based on the fact that the legislation in the Netherlands provided for a general participation exemption that effectively allowed disregarding tax depreciation of shareholdings. However, the CJ did not acknowledge that the participation exemption is not applicable in situations involving a switch over or liquidation and also did not considered a potential double loss utilization via debt claims that a parent company may have against its foreign intermediate subsidiary. Had that been the case, the CJ should have accepted this justification, once again in the context of measures of a particular tax system, involving one and the same taxpayer and with the purpose of avoiding a possible double advantage.

This interpretation of the justification based on the need to preserve of the coherence of the tax system was followed by the CJ in its subsequent case law dealing with group taxation regimes.

In *Groupe Steria*, France brought forward once again the argument based on the coherence of the tax system forward as regards its group taxation regime. In this case, in the context of its 95% tax exemption limitation as regards foreign shareholdings with the remaining 5% exclusion in proportion of costs and leading to an effective partial taxation of the foreign profit distributions. France argued that the general aim of the French group taxation regime was to treat, as far as possible, a group constituted by a parent company and other dependent companies in the same way as an undertaking with a number of PEs. This means that the transactions between group members were disregarded. This neutralisation of transactions could have positive and negative effects which, according to France, could be directly linked.[1205] The CJ rejected these arguments considering that France did not demonstrate the existence of a correlative disadvantage associated with the neutralisation of the intragroup transactions that compensated the specific advantage deriving from a full exemption of corporate tax on the dividends[1206].

In *Finanzamt Linz*, Austria argued[1207] that the impossibility to depreciate goodwill on holdings acquired in foreign companies – when compared with such possibility in case of was justified by the need to ensure the cohesion of the tax system. In particular, it argued the existence of a direct link between the tax advantage consisting in the depreciation of the goodwill, on the one hand, and the tax attribution to the parent company of the results of the subsidiary, on the other hand. The CJ disregarded this justification. First of all because

[1205] This argumentation of all the advantages and disadvantages being directly linked to each other was subject to further observations by AG Kokott that stressed the need of a link between the advantage and the levy as regards the aim pursued by the tax provision at stake. This requires identifying a specific tax levy and its individual purpose when analysing the justification based on preserving the coherence of the taxs system. See Opinion of AG Kokott delivered on 11 June 2015 in case C-386/14, *Groupe Steria SCA v Ministere des Finances et des Comptes publics*, paras. 48-51.
[1206] CJ, 2 September 2015, Case C-386/14, *Groupe Steria SCA v Ministere des Finances et des Comptes publics*, paras. 32-36.
[1207] CJ, 6 October 2015, C-66/14, *Finanzamt Linz v Bundesfinanzgericht, Außenstelle Linz*, para. 45.

under the Austrian legislation the depreciation of goodwill was granted irrespective[1208] of whether the company in which the holding is acquired made a profit or a loss.[1209] In addition and following its previous case law[1210] the CJ rejected the argument of Austria based on the symmetry between compensated by the possible taxation at the level of the parent company of possible capital gains realised upon the disposal of those participations. The Court rejected the existence of such direct link[1211], as the depreciation of goodwill was immediate while the taxation of capital gains was remote and uncertain as it considered the existence of a sufficient level of profits and a decision to sell those participations.[1212]

These last decisions illustrate the narrow meaning given by the CJ as regards the interpretation of the justification based on preserving the coherence of the tax system. The Court requires the identification of a direct link that demonstrates a strict correlation between the tax advantage and the tax disadvantage[1213] taking into account the objective pursued by the rules in question[1214].

[1208] CJ, 6 October 2015, C-66/14, *Finanzamt Linz v Bundesfinanzgericht, Außenstelle Linz*, paras. 44-45.

[1209] In addition, as stated by AG Kokott, the independence between the depreciation of goodwill and the attribution of profit was also demonstrated by the fact that in case of domestic subsidiaries incorporated in Austria. In this event, the income was still attributed to the parent company while it was not possible to depreciate the goodwill which was limited to acquired shareholdings. See Opinion of AG Kokott delivered on 16 April 2015 in case C-66/14, *Finanzamt Linz v Bundesfinanzgericht, Außenstelle Linz*, para. 53

[1210] ECJ 22 January 2009, C-377/07, *Finanzamt Speyer-Germersheim v STEKO Industriemontage GmbH*, para. 54; ECJ 29 March 2007, C-347/04 *Rewe Zentralfinanz eG v Finanzamt Köln-Mitte*, para. 48.

[1211] This was further enhanced by the fact even if the taxpayer opted by having its capital gains taxed in Austria upon the sale of foreign participations, the depreciation of goodwill was stil not possible. See CJ, 6 October 2015, Case C-66/14, *Finanzamt Linz v Bundesfinanzgericht, Außenstelle Linz*, para. 49.

[1212] See cases CJ, 6 October 2015, Case C-66/14, *Finanzamt Linz v Bundesfinanzgericht, Außenstelle Linz*, para. 48

[1213] See cases, ECJ 22 January 2009, C-377/07, *Finanzamt Speyer-Germersheim v STEKO Industriemontage GmbH*, para. 53; or ECJ, 28 February 2008, Case C-293/06, *Deutsche Shell GmbH v Finanzamt für Grossunternehmen in Hamburg*, para. 39.

[1214] In this regard it appears that the CJ:

- rejects the neutralisation of the transactions as a disadvantage *per se* whenever they do not demonstrate the existence of a specific disadvantage that compensates the particular tax advantage at stake. This can be derived from comparing the reasoning in *Papillon* (non-recognition of write-down of participations v deduction of losses) with *Groupe Steria*;
- the disadvantage must demonstrate a strict correlation in the sense that it cannot be remote (in the sense of different timing, that is, an immediate advantage to be compensated with an equal immediate disadvantage) or uncertain (immediate advantage with eventual, but not certain disadvantage such as a possible sale of shareholdings and eventual capital gains deriving from that sale);
- the CJ has not been recognizing the relevance of taxing the profits of domestic subsidiaries while not taxing the profits foreign subsidiaries in the context of ascertaining the coherence of the tax system. This can be due to:
    - granting the tax advantage is not directly related to the taxation of the profits of the subsidiary (see Finanzamt Linz);
    - the particular objective pursued by the measure at stake implies that the taxation of the profits of the subsidiary is not relevant. In Groupe Steria the CJ acknowledged in para. 22

16.2.4 Balanced allocation of taxing powers

16.2.4.1 Meaning of a newly introduced justification

The *Marks & Spencer* judgment introduced a new accepted ground of justification: the "*balanced allocation of the powers to tax among Member States*". The meaning of this justification is not entirely clear. The Court starts by observing that the allocation of the power to tax is a matter for Member States and that as a rule, they make a delimitation of their powers to tax in accordance with international taxation practice according to which they tax both domestic generated income and worldwide income of resident taxpayers. Therefore, the need to safeguard[1215] the balanced allocation of the powers refers to the preservation of the right of the Member States to exercise their taxing powers in relation to activities carried on in their territory[1216] and it involves that in principle to the economic

---

that the speficic aim of the French full tax exemption was to eliminate economic double taxation. In other situations (Manninen, paras. 47-48 or Keller Holding, paras. 42-43) the CJ has rejected such justification in the context of a legislation with an identical purpose;

While the reasoning adopted by the CJ may be consistent with its previous case-law one may wonder whether, the coherence justification based simmetry principle as accepted in K case should be transposed in particular in the context of group taxation regimes considering the tension between on one hand the taxation of group members as PEs and the fact that foreign subsidiaries are outside the tax jurisdiction of the Member State of the parent company on the other. AG Kokott appears to have given relevance to this fact in her Opinion delivered on 16 April 2015 in case C-66/14, *Finanzamt Linz v Bundesfinanzgericht, Außenstelle Linz*, para. 53.

[1215] The CJ case law also suggests that this justification cannot succeed when a Member State voluntarily – via a tax treaty – allocates taxing rights and abandons the powers to tax a certain income. In that effect that derives from a freely accepted allocation of powers of taxation. See CJ 17 September 2015, C-589/13, *F.E. Familienprivatstiftung Eisenstadt v Unabhängiger Finanzsenat, Außenstelle Wien*, para. 71.

[1216] See, *inter alia*, cases ECJ 12 September 2006, C-196/04, *Cadbury Schweppes and Cadbury Schweppes Overseas v Commissioners of Inland Revenue*, para. 56; ECJ 29 March 2007, C-347/04, *Rewe Zentralfinanz eG v Finanzamt Köln-Mitte*, para. 42; ECJ, 18 July 2007, C-231/05, *Oy AA*, para. 54; ECJ 8 November 2007, C-379/05, *Amurta SGPS v Inspecteur van de Belanstingdienst/Amsterdam*, para. 58; ECJ 4 December 2008, C-330/07, *Jobra Vermögensverwaltungs-Gesellschaft mbH v Finanzamt Amstetten Melk Scheibbs*, para. 33; ECJ 18 June 2009, C-303/07, *Aberdeen Property Fininvest Alpha Oy*, para. 66; ECJ 17 September 2009, C-182/08, *Glaxo Wellcome GmbH & Co. KG v Finanzamt Munchen II*, para. 82; CJ 21 January 2010, C-311/08 *Société de Gestion Industrielle (SGI) v Belgian State,* para. 60; CJ 29 November 2011, C-371/10, *National Grid Indus BV v Inspecteur van de Belastingdienst Rijnmond/kantoor Rotterdam*, para. 46, CJ 20 October 2011, Case C-284/09, *European Commission v Federal Republic of Germany*, para. 77; CJ 10 May 2012, Joined Cases C-338/11 to C-347/11, *Santander Asset Management SGIIC SA v Directeur des résidents à l'étranger et des services généraux and Santander Asset Management SGIIC SA and Others v Ministre du Budget, des Comptes publics, de la Fonction publique et de la Réforme de l'État*, para. 47; CJ 5 July 2012, C-318/10, *SIAT SA v État Belge*, para. 45; CJ 21 February 2013, C-123/11, A Oy, para. 41; CJ 10 April 2014, C-190/12, *Emerging Markets Series of DFA Investment Trut Company v Dyrektor Izby Skarbowej w Bydsgoszczy*, para. 98.

activities of companies established in one State, only the tax rules of that State should apply in respect to both profits and losses[1217].

The meaning of this justification becomes clearer with the guidance provided by the CJ in *Oy AA*[1218] when referring to the *ACT Group Litigation*[1219] case. This is particularly interesting as the CJ in this latter judgment did not make express reference to the justification based on balanced allocation of the powers to tax. It rather referred that:

> "It must be held in that regard, first, that to require the Member State in which the company making the distribution is resident to ensure that profits distributed to a non-resident shareholder are not liable to a series of charges to tax or to economic double taxation, either by exempting those profits from tax at the level of the company making the distribution or by granting the shareholder a tax advantage equal to the tax paid on those profits by the company making the distribution, would mean in point of fact that that State would be obliged to abandon its right to tax a profit generated through an economic activity undertaken on its territory." [UnderscoreBdS]

That the scope of the balanced allocation of the powers to tax is limited to domestic income[1220], that is, the activities undertaken within the national territory of a Member State[1221] is particularly clear from the reasoning of the Court adopted in the *Haribo* case[1222]:

> "123. Treatment of portfolio dividends received by a resident company in the same way whether they come from another resident company or from a company established in a

---

[1217] See *inter alia* ECJ 15 May 2008, Case C-416/06, *Lidl Belgium GmbH & Co. KG v Finanzamt Heilbronn*, para. 31 or CJ 21 January 2010, Case C-311/08 *Société de Gestion Industrielle (SGI) v Belgian State*, para. 61, CJ 21 February 2013, Case C-123/11, *A Oy*, para. 42.

[1218] See ECJ, 18 July 2007, Case C-231/05, *Oy AA*, para. 56.

[1219] See ECJ 12 December 2006, Case C-374/04, *Test Claimants in Class IV of the ACT Group Litigation v Commissioners of Inland Revenue*, para. 59

[1220] Concurrently see Axel Cordewener et al., "The Clash between European Freedoms and National Direct Tax Law: Public Interest Defences available to the Member States", 46 *Common Market Law Review* (2009), p. 1974.

[1221] Similarly, the Opinion of AG Kokott of 11 November 2010 in joined cases C-436/08 and C-437/08, *Haribo Lakritzen Hans Riegel BetriebsgmbH and Österreichische Salinen AG v Finanzamt Linz*, paras. 117 and 120:

> 117. It should be stated in this regard that the Court has recognised the need to safeguard the balanced allocation of the power to impose taxes as an overriding reason in the public interest in relations between Member States, initially only in conjunction with other grounds of justification, but recently also by itself. However, the scope attached hitherto to this ground of justification in case-law is narrower than the term might suggest [underscore BdS]
> […]
>
> 120. […] the case concerns not the power to impose taxes in respect of economic activities carried on in Austria, but taxation of foreign income, and, second, Austria's power to impose taxes would not be jeopardised as such if, in the case of non-member-state portfolio dividends, it permitted the corporation tax levied in the non-member State on the profits used for that purpose to be credited […]

[1222] See CJ 10 February 2011, joined cases C-436/08 and C-437/08, *Haribo Lakritzen Hans Riegel BetriebsgmbH and Österreichische Salinen AG v Finanzamt Linz*, paras. 123-124.

> non-member State other than a State party to the EEA Agreement would not result in income normally taxable in the Member State where the recipient company is resident being transferred to the non-member State concerned (see, to this effect, *Glaxo Wellcome*, paragraph 87). As the Advocate General states in point 120 of her Opinion, the main proceedings concern not the power to impose taxes in respect of economic activities carried on in national territory, but taxation of foreign income.
>
> 124. That being so, the difference in treatment between portfolio dividends according to whether they are nationally-sourced or foreign-sourced cannot be justified in light of the need to safeguard the allocation of the power to impose taxes between Member States and non-member States other than States party to the EEA Agreement." [undercore BdS]

In that regard, the cross-border transfer of losses is a specific situation that undermines such power but other types of conduct may jeopardise the balanced allocation of powers as well. In terms of scope and particulary as concerns to cross-border loss relief, the main criticism derives from the consequence that the CJ provides to this justification according to which the balanced allocation of the power to impose taxes between Member States would be undermined since a transfer of losses in one State would lead to a corresponding increase of the tax base in that State in the precise amount of the losses transferred[1223]. This in based on a wrong assumption when applied with regard to group taxation regimes[1224] since there is no such effect deriving from the tax law of one Member State. The fact that a parent company takes the losses of a subsidiary in the other Member State does not affect the way that losses are treated in the Member State of the subsidiary or the respective tax base. In other words, from the perspective of the State of source the balanced allocation of taxing powers is never disrupted by allowing cross-border loss relief as that Member State remains with unlimited powers to tax the profits arising from activities in its territory.[1225]

But the justification based on preserving the balanced allocation of the powers to tax between Member States has given rise to substantial doubts not only about its exact scope but also about its relation with other justifications.

[1223] See cases ECJ 13 December 2005, C-446/03, *Marks & Spencer plc v David Halsey (Her Majesty's Inspector of Taxes)*, para. 46; CJ 25 February 2010, C-337/08, *X Holding B.V. v Staatssecretaris van Financiën*, para. 29. Clearly also AG Kokott in the Opinion delivered on 11 June 2015, in case C-386/14, *Groupe Steria SCA v Ministère des finances et des comptes publics*, para. 35 rejecting the justification based on the need to preserve the allocation of taxing powers between Member States as the costs were incurred only in the Member State of residence of the parent company and "*the fiscal jurisdiction of another Member State is not therefore affected*".

[1224] But it may in principle be correct as a reasoning regarding transfer pricing regulations as applied in CJ, 21 January 2010, Case C-311/08 *Société de Gestion Industrielle (SGI) v Belgian State*. Those types of regulations are aimed at tackling precisely artificial shift of profits from one jurisdiction to another between companies which have a relationship of interdependence.

[1225] See Wolfgang Schön, "Loosing Out at the Snooker Table: Cross-Border Loss Compensation for PE´s and the Fundamental Freedoms", in L. Hinnekens and P. Hinnekens (eds.) *A Vision Within and Outside the European Borders, Festschrift in honor of Frans Vanistendael* Kluwer Law International The Netherlands (2008), p. 821.

In that regard it has been submitted[1226] that the newly introduced justification as just another way of referring to protecting tax revenue, something that the CJ, as previously referred to, has systematically rejected as an overriding reason in the public interest. The Court had the opportunity to clarify in the *Glaxo Wellcome* case[1227] to clarify that these are two different justifications which pursue different aims, one being accepted as an overriding reason in the public interest while the other is not:

> "82. […] it must be pointed out that, while it has been consistently held in the case-law that a reduction in tax revenue cannot be regarded as an overriding reason in the public interest which may be relied on to justify a measure which is, in principle, contrary to a fundamental freedom (see, inter alia, *Manninen*, paragraph 49 and the case-law cited), the Court has also accepted that there may be some conduct which is capable of undermining the Member States' right to exercise their tax jurisdiction in relation to the activities carried out in their territory and thus of jeopardising a balanced allocation of the power to impose taxes between the Member States (see *Marks & Spencer*, paragraph 46) which can justify a restriction on the freedoms secured by the Treaty […]
> […]
>
> 87. Such consequences would not just reduce the Federal Republic of Germany's tax revenues but would mean that, by indirectly granting the non-resident a financial advantage equal to the tax credit for the tax charged on the profits of a resident company, the profits normally taxable in that company's Member State of residence would be transferred to the Member State with jurisdiction to tax the profits made by the non-resident, thus jeopardising a balanced allocation of the power to impose taxes between the Member States."

From the above statement of the Court it appears that the difference between the two justifications is that the balanced allocation of the powers to tax necessarily comes before the possible loss of tax revenue. The balanced allocation of the powers to tax aims at preserving the existing possibility to tax the domestic income, or the exercise of the competence to tax such income. The tax revenue refers to the exercise of such (preserved) competence.

An alternative criticism was that[1228] the balanced allocation of taxing powers has been used as a justification to avoid the "loss trafficking" and, in that regard, it would not differ much from a measure to fight the risk of tax avoidance[1229] (by itself one of the three accepted justifications in *Marks & Spencer*).

[1226] See Melchior Wathelet, "Marks & Spencer Plc v Halsey: lessons to be drawn", *British Tax Review* 2 (2006), pp. 130-131.

[1227] See ECJ 17 September 2009, C-182/08, *Glaxo Wellcome GmbH & Co. KG v Finanzamt Munchen II*, paras. 82 and 87.

[1228] See M. Wathelet, "Tax Sovereignty of the Member States and the European Court of Justice: New Trends or Confirmation?", in *A Vision of Taxes within and Outside European Borders; Festchrift in Honor of Prof. Dr. Frans Vanistendael*, ed. Luc Hinnekens & Philippe Hinnekens Kluwer Law International (2008), p. 92.

[1229] In this sense also Peter J. Wattel, "Argenta Spaarbank: Notional Interest Deduction regime – treatment of foreign permanent establishments is a restriction on the freedom of establishment", *H&I* 2013/12.4, p. 30. Wattel considers that the meaning giving by the CJ to the justification based on the balanced allocation of the

16.2.4.2 Balanced allocation of the powers to tax and principle of territoriality

But probably the major issue is whether the balanced allocation of the powers is distinguishable from the previously used justifications of the ECJ: fiscal territoriality and fiscal coherence. In particular it has been considered[1230] that balanced allocation of taxing powers is in fact not an essentially new notion but rather it is conceptually identical to the other justifications referred to.[1231] They all refer to the need for tax symmetry, the tax base increase and corresponding tax base reduction or the right of a Member State to tax income arising within such State. AG Kokott has expressed this view when stating that:[1232]

---

powers to tax deprives this justification of all meaning being entirely coincident with the one based on the prevention of abuse.

[1230] See in particular P.J. Wattel, "Fiscal Cohesion, Fiscal Territoriality and Preservation of the (Balanced) Allocation of Taxing Power; What is the Difference?", in *The Influence of European Law on Direct Taxation: Recent and Future Developments*, ed. Dennis Weber (EUCOTAX, Kluwer Law International, 2007), p. 156. Also in this regard, Philip Baker, "Transfer Pricing and Community Law: The SGI Case", 38 *Intertax* 4, p.195.

[1231] See Paul Farmer "Striking a Proper Balance between the National Fiscal Interests and the Community Interest – a Perpetual Struggle?" In D.Weber (ed.) *The Influence of European Law on Direct Taxation: Recent and Future Developments*, EUCOTAX Series on European Taxation Vol. 16 (2007), p. 32. P. Farmer refers to the balanced allocation of taxing powers as a *"revitalized form"* of the principle of fiscal coherence.

[1232] See Opinion of AG Kokott delivered on 23 October 2014, in case C-172/13, *European Commision v UK*, para. 31. Similarly Kokott had already held in her Opinion delivered on 13 March 2014, in case C48/13, *Nordea Bank*, that balanced allocation of the powers to tax was not a new justification but rather a different expression for other accepted grounds of justification:

> "42. It is clear from the scenarios recognised to date that the ground of justification called 'preservation of the allocation of the power to impose taxes between Member States' is simply an expression of other recognised grounds of justification, specifically with regard to the delimitation of Member States' fiscal sovereignty.
>
> 43. First, the idea that the profits and losses arising from an activity must not be taken into account separately is simply an expression of the ground of justification of preservation of the coherence of a tax system. This states that the restriction of a fundamental freedom may be justified where a direct link is established between a tax advantage and the offsetting of that advantage by a particular tax levy. (27) When examining that ground of justification, the Court has already held that such a direct link exists between the taking into account of the profits and the losses arising from an activity in a Member State. To that extent, the Court is right to say that the requirements of coherence of the tax system and the balanced allocation of powers of taxation between Member States coincide.
>
> 44. Secondly, preventing the transfer of income from one Member State to another by means of fictitious or fraudulent arrangements is simply a special instance of the recognised ground of justification of preventing tax avoidance. It is settled case-law that a national provision restricting freedom of establishment may be justified where it specifically targets wholly artificial arrangements designed to circumvent the legislation of the Member State concerned. 'Preservation of the allocation of the power to impose taxes between Member States', for its part, is concerned not with preventing a taxable person from avoiding taxation altogether, but with preventing him from moving taxable revenue to another Member State by means of

> " […] According to now established case-law, a Member State is in principle required to take into account a loss from foreign activity only if it also taxes that activity, whether the Court now describes this as 'ensuring the cohesion of the tax system', 'preservation of the allocation of the power to impose taxes between Member States', 'safeguarding the symmetry' between taxation of profits and deduction of losses, preventing 'losses being used twice' or preventing 'tax avoidance'. This case-law is further reinforced by the Court's statements regarding the objective comparability of situations which, as I have explained, attach crucial importance to the issue of whether or not a Member State taxes a foreign activity."

This view appears to find support for instance when comparing the relevant case law on cross-border loss relief. For instance in *Krakenheim Ruhesitz*[1233] the Court also used the argument of symmetry whereas in *Marks & Spencer*[1234], *Oy AA*[1235], *Lidl Belgium*[1236] and *Argenta Spaarbank*[1237] the justification was based on the need to preserve the balanced allocation of powers to impose taxes. In *Krakenheim Ruhesitz*[1238] the Court referred to the need to maintain the coherence of the tax system[1239]. In *Future Participations*[1240] the Court referred to the *exercise of tax jurisdiction from activities arising within its territory*[1241] as

---

> artificial arrangements. The Court itself recognises this connection when it has occasion to consider the two grounds of justification together.
>
> 45. Recognition of the ground of justification of 'preservation of the allocation of the power to impose taxes between Member States' as simply being a particular expression of other recognised grounds of justification also explains why the Court sometimes allows the preservation of the allocation of those powers to stand as an independent ground of justification, and sometimes appears to recognise it only in conjunction with other grounds of justification." [underscore BdS]

[1233] ECJ 23 October 2008, C-157/07 *Finanzamt für Körperschaften III in Berlin v. Krankenheim Ruhesitz am Wannsee-Seniorenheimstatt GmbH*.

[1234] See ECJ 13 December 2005, C-446/03, *Marks & Spencer plc v David Halsey (Her Majesty's Inspector of Taxes)*, para. 43.

[1235] See ECJ, 18 July 2007, C-231/05, *Oy AA*, para. 56.

[1236] See ECJ 15 May 2008, C-416/06, *Lidl Belgium GmbH & Co. KG v Finanzamt Heilbronn*, para. 34.

[1237] See CJ 4 July 2012, Case C-350/11, *Argenta Spaarbank NV v Belgische Staat*, para. 54.

[1238] In this regard, Lang refers that coherence of the tax system and balanced allocation of the powers to tax are exchangeable and that the two grounds of justification accepted in Lidl Belgium can be replaced by the single justification based on cohesion of the tax system. See Michael Lang, "Recent Case Law of the ECJ in Direct Taxation: Trends, Tensions, and Contradictions", *EC Tax Review* 3 (2009), p. 109.

[1239] Schon refers that coherence since it adopts an unilateral perspective of looking to the legislation of one Member State and considering whether the taxpayer enjoys a better position when compared with a resident taxpayer in a pure domestic situation fits better with the meaning of symmetry in the sense of considering the link between a tax advantage and disadvantage of a particular tax rule. See Wolfgang Schön, "Neutrality and Territoriality – Competing or Converging Concepts in European Tax Law?", 69 *Bulletin for International Taxation* 4/5 IBFD 2015, pp. 278-280.

[1240] See cases ECJ 13 December 2005, C-446/03, *Marks & Spencer plc v David Halsey (Her Majesty's Inspector of Taxes)*, para. 43 and ECJ 15 May 1997, C-250/95 *Futura Participations v Singer,* paras. 20-22.

[1241] See cases ECJ 13 December 2005, C-446/03, *Marks & Spencer plc v David Halsey (Her Majesty's Inspector of Taxes)*, para. 43 and ECJ 23 October 2008, C-157/07 *Finanzamt für Körperschaften III in Berlin v Ruhesitz am Wannsee-Seniorenheimstatt GmbH,* para. 44

the fiscal principle of territoriality[1242] while in subsequent case-law, the protection of *the power to impose taxes in respect of economic activities carried on in national territory* was referred to as the balanced allocation of the powers to tax[1243].

In *Bosal Holding* the CJ rejected the justification based on the principle of territoriality by considering that[1244]:

> "[...] It should be noted that the application of the territoriality principle in Futura Participations and Singer concerned the taxation of a single company which carried on business in the Member State where it had its principal establishment and in other Member States from secondary establishments."

And precisely by this same reason, AG Maduro considered that the principle of territoriality was inapplicable in *Marks & Spencer* situation. In AG Maduro's own words[1245]:

> "63. […]Yet in the present case there is nothing to prevent the United Kingdom from extending the relief to parent companies with non-resident subsidiaries. The claim is made in the context of a regime applicable to groups adopted by the United Kingdom. It <u>does not concern the imposition of a charge to tax on a sole taxpayer resident and carrying on its main activities abroad but a transfer of losses between companies</u> forming part of the same group. Within the group the claim is made by the parent company resident in the United Kingdom which is subject under that head to unlimited fiscal obligations in that country. In regard to it the tax competence of that Member State is not limited. In those circumstances the United Kingdom is <u>not entitled to rely on the principle of territoriality</u> in order to refuse to a company within a group resident in its territory the grant of an advantage connected with the transfer of losses." [Underlined BdS]

Therefore according to the CJ case law the principle of territoriality can only be a valid justification in situations that affect a sole taxpayer[1246]. Therefore and from the outset the principle of territoriality was a rejected justification in situations involving group taxation regimes as two taxpayers are involved. This, of course, gives rise to the next question, why the principle of territoriality could not constitute a valid justification in situations involving PEs, as in *Deutsche Shell* or *Lidl Belgium* which concern cases where merely one taxpayer is involved. The explanation derives precisely from the meaning that the CJ ascribes to the principle of territoriality. The factual background of those cases was precisely the partition

---

[1242] In this regard Luc de Broe considers that the justification base on preserving the balanced allocation of the powers to tax corresponds to the justification based on the principle of territoriality. See Luc de Broe, *International Tax Planning and Prevention of Abuse: A Study under Domestic Tax Law, Tax Treaties and EC Law in Relation to Conduit and Base Companies*, IBFD Doctoral Series Vol. 14 (2008), p. 819.

[1243] See cases CJ 21 January 2010, C-311/08 *Société de Gestion Industrielle (SGI) v Belgian State*, para. 60, ECJ, 18 July 2007, C-231/05, *Oy AA*, para. 66, CJ 10 February 2011, Joined Cases C-436/08 and C-437/08, *Haribo Lakritzen Hans Riegel BetriebsgmbH and Österreichische Salinen AG v Finanzamt Linz*, para. 123.

[1244] See ECJ 18 September 2003, C-168/01, *Bosal Holding BV v Staatssecretaris van Financien*, para. 38.

[1245] See Opinion of AG Maduro delivered on 7 April 2005 in case C-446/03, *Marks & Spencer plc v David Halsey (Her Majesty's Inspector of Taxes)*, para. 63.

[1246] Similarly, Melchior Wathelet, Marks & Spencer Plc v Halsey: lessons to be drawn, *British Tax Review* 2 (2006), p. 130.

between domestic and foreign results pursuant to the applicable tax treaty.[1247] However, as referred to before, the CJ does not give to the principle of territoriality the meaning typically given for tax purposes: the exclusion of foreign (both positive and negative) income

But having established that the CJ does not give a similar meaning to the principle of territoriality and the balanced allocation of the powers to tax the issue, it must then be determined why did the Court referred to both those justifications in the exit taxes cases *N*[1248] and *National Grid Indus*. Taking *National Grid Indus* as an example, the Court considered that:[1249]

> "47. The transfer of the place of effective management of a company of one Member State to another Member State cannot mean that the Member State of origin has to abandon its right to tax a capital gain which arose within the ambit of its powers of taxation before the transfer (see, to that effect, Case C-374/04 *Test Claimants in Class IV of the ACT Group Litigation* [2006] ECR I-11673, paragraph 59). The Court has thus held that, in accordance with the principle of fiscal territoriality linked to a temporal component, namely the taxpayer's residence for tax purposes within national territory during the period in which the capital gains arise, a Member State is entitled to charge tax on those gains at the time when the taxpayer leaves the country (see *N*, paragraph 46). Such a measure is intended to prevent situations capable of jeopardising the right of the Member State of origin to exercise its powers of taxation in relation to activities carried on in its territory, and may therefore be justified on grounds connected with the preservation of the allocation of powers of taxation between the Member States (see *Marks & Spencer*, paragraph 46; *Oy AA*, paragraph 54; and Case C-311/08 *SGI* [2010] ECR I-487, paragraph 60). […]
>
> 48. Having regard to those factors, legislation such as that at issue in the main proceedings is appropriate for ensuring the preservation of the allocation of powers of taxation between the Member States concerned. The final settlement tax levied at the time of the transfer of a company's place of effective management is intended to subject to the Member State of origin's tax on profits the unrealised capital gains which arose within the ambit of that State's power of taxation before the transfer of the place of management. Unrealised capital gains relating to an economic asset are thus taxed in the Member State in which they arose. Capital gains realised after the transfer of the company's place of management are taxed exclusively in the host Member State in which they have arisen, thus avoiding double taxation." [underscore BdS]

It appears that the CJ is not considering that both justifications have the same meaning, but it confirms that they can be interrelated. In this case, the Court makes reference to territoriality in order to confirm the Member State's right to tax the accrued capital gains,

---

[1247] Although it may be disputable whether the exemption as per the application of a tax treaty involves both positive and negative foreign income or, it is applicable only to the foreign positive income.

[1248] ECJ 7 September 2006, C-470/04 *N v Inspecteur van de Belastingdienst Oost/kantoor Almelo*, paras. 41-47.

[1249] CJ 29 November 2011, C-371/10 *National Grid Indus BV v Inspecteur van de Belastingdienst Rijnmond/kantoor Rotterdam*, paras. 47-48.

being that such right to tax corresponds precisely to fiscal jurisdiction which is the meaning ascribed by the Court to territoriality. The balanced allocation of the powers to tax is regarded as a valid justification as, otherwise, the right to tax of a Member State of activities generated within its territory would be jeopardized, as such income would be transferred to another Member State upon the transfer of the company's place of effective management.

16.2.4.3 Balanced allocation of the powers to tax and coherence of the tax system

The next analysis involves determining the difference between balanced allocation of the powers to tax and cohesion of the tax system. It is apparent from the CJ case law that these two justifications are not the same. In fact, the cohesion of the tax system was an accepted justification in the *Papillon* case whereas the CJ rejected the justification based on the balanced allocation of the powers to tax. Differently, in *Glaxo Wellcome*, the CJ accepted this last justification but rejected the need to maintain the coherence of the tax system. In exit taxes cases, both the balanced allocation of the powers to tax and the coherence of the tax system were accepted as valid justifications.

A possible explanation[1250] for this difference is that fiscal cohesion is concerned with achieving equity of taxation as between taxpayers rather than allocation of powers to tax which is between Member States. Whilst the aim of the balanced allocation of the powers to tax is that a Member State is able to tax the activities resulting from transactions within its jurisdiction, the aim of the cohesion principle is to guarantee tax fairness among taxpayers. Another difference is that the coherence involves tax provisions concerning the same tax on the same taxpayer. [1251] This can be seen for instance in the *Lankhorst-Hohorst* case[1252] as a reason for the Court to reject this justification by considering that:

> "Although in *Bachmann* and *Commission* v *Belgium*, since the taxpayer was one and the same person, there was a direct link between deductibility of pension and life assurance contributions and taxation of the sums received under those insurance contracts and preservation of that link was necessary to safeguard the coherence of the relevant tax system, there is no such direct link where, as in the present case, the subsidiary of a non-resident parent company suffers less favourable tax treatment and the German Government has not pointed to any tax advantage to offset such treatment."

When analysing the German thin capitalization legislation the Court held that fiscal coherence could only be accepted when corresponding benefits and losses occur to the

[1250] See J. Englisch, "Taxation of Cross-Border Dividends and EC Fundamental Freedoms", 38 *Intertax* 4, Kluwer Law International BV (2010), p. 210.
[1251] AG Geelhoed refers to the limitation of the scope of the cohesion of the tax system as "one tax, one tax payer". See AG Geelhoed Opinion delivered on 29 June 2006, in case C-524/04, *Test Claimants in Class IV of the ACT Group Litigation v Commissioners of Inland Revenue*, para. 88. See also, *inter alia*, case CJ 1 December 2011, Case C-253/09, *European Commission v Republic of Hungary*, para. 77
[1252] ECJ, 12 December 2002, C-324/00, *Lankhorst-Hohorst GmbH v Finanzamt Steinfurt*, para. 42.

same taxpayer. This was not the case when referring to different taxpayers: local subsidiary and a foreign parent company.
Similarly, in the case of cross border loss relief[1253] we are not referring to the same taxpayer and there are always two jurisdictions involved under which the losses arising in one jurisdiction are offset against the profits derived in another jurisdiction.

It emerges from the CJ reasoning that coherence only constitutes a valid justification when there is a direct link *within the same tax system of one Member State*. Differently, balanced allocation of the powers to tax refers to interaction of rules of *two different Member States*[1254] as it immediately derives from the literal wording of this justification which aims at preserving the powers of taxation *as between the Member States*. This is the reason why the CJ accepted cohesion of the tax system as a valid justification in both the *Papillon* and *Krankenheim Ruhesitz* cases. In both cases there was a direct link regarding the measures at stake regarding the same taxpayer and the national tax system of one Member State.[1255] In *Krankenheim Ruhesitz* the link referred to the deduction of losses and the subsequent recapture of those previously deducted losses. And similarly in *Papillon* the link referred to the loss compensation of the subsidiary's losses at the level of the parent company and disallowing the parent company to make a deduction regarding the book value of its subsidiary both located in the same Member State.

In addition, the CJ clearly draw the line between *Papillon* and cases like *Marks & Spencer* and *Oy AA* in order to reject the justification based on the balanced allocation of the powers to tax by expressly holding that[1256]:

[1253] Vanistendael also arguess that the coherence principle is inadequate to the cases of cross-border loss relief as it is an argument which fits into a non-discrimination analysis and not into a restriction analysis. This argument drawn by Vanistendael is based on the clear dichotomy between restriction and discrimination analysis which, as referred to, has been blurred by the CJ both conceptually and in terms of language. See Frans Vanistendael, "The compatibility of the basic economic freedoms with the sovereign national tax systems of the Member States", *EC Tax Review* 3 (2003), p. 140.
[1254] See A. Cordewener, G. Kofler & S. van Thiel, "The Clash Between European Freedoms and National Direct Tax Law: Public Interest Defences available to Member States", *Common Market Law Review* 46 (2009), p. 1974. Similarly see Dennis Weber, "Part, current and future analysis of the coherence of the tax system justification" in *EC Tax Review* 2015/1 p. 54.
[1255] In addition also in the SCA Group Holding case, the CJ dealt with this justification. This justification was rejected based on the specific context of the legislation in the Netherlads. It is however relevant to stress that similarly, to Papillon, the coherence of the taks system is analysed since the situation involved only companies belonging to a group which were resident in a single State (the Netherlands). Although the Court did not expressly referred why it dealt with this justification and not balanced allocation of the powers to tax, the explanation is my view relies that are no two Member States involved. CJ 12 June 2014, Joined cases C-39/13, C-40/13 and C-41/13, *Inspecteur van de Belastingdienst Noord/kantoor Groningen v SCA Group Holding BV (C-39/13), X AG, X1 Holding GmbH, X2 Holding GmbH, X3 Holding BV, D1 BV, D2 BV, D3 BV, v Inspecteur van de Belastingdienst Amsterdam (C-40/13) and Inspecteur van de Belastingdienst Holland-Noord/kantoor Zaandam v MSA International Holdings BV, MSA Nederland BV (C-41/13)*, para. 32-35.
[1256] ECJ 27 November 2008, C-418/07, *Société Papillon v Ministère du Budget, des Comptes publics et de la Fonction publique*, paras. 37-40.

"37. In *Marks & Spencer* and *Oy AA*, the questions referred related, in the former case, to the taking into account of losses recorded in a Member State other than that in which the taxpayer was resident and, in the latter case, to a risk of tax avoidance.

38 In the main proceedings, those questions do not arise, since the object of the reference for a preliminary ruling is to establish whether the fact that a company which is resident in a Member State cannot benefit from the tax integration regime with its sub-subsidiaries which are also resident in that State when the intermediate subsidiary is established in another Member State constitutes a restriction, and not to establish whether the non-resident subsidiary should be capable of falling under that regime.

39 In the main proceedings, the question as to whether the profits and losses of companies belonging to the group in question should be taken into account arises only in relation to companies which are resident in a single Member State. Accordingly, the question which is put relates to the taking into account of losses recorded in one and the same Member State, which also excludes, prima facie, a risk of tax avoidance.
40 Consequently, the restriction established in paragraphs 22 to 32 of this judgment cannot be justified by the allocation of the power to impose taxes between Member States." [Underscore BdS]

This reasoning followed by the Court can be (implicitly) traced back to the decision of the EFTA Court in the *Seabrokers* judgment[1257] which dealt with the Norwegian group contribution system and where it was stated that:

"66. […] group contributions seem to be deducted from the taxable income of the donor and added to the taxable income of the recipient, provided that both companies are subject to Norwegian fiscal jurisdiction. Such a system of intra group financial transfers generally serves the purpose of mitigating tax disadvantages within a group of companies, by allowing them to balance our their profits and losses. The logic behind not allowing deductions for group contributions made to companies abroad is generally to prevent companies from freely choosing the State in which the profits are to be taxed.

67. When comparing two companies that make group contributions to daughter companies in their home State, the fact that one of the companies has a branch in another EEA State does not place it in a different position with regard to the group contributions. The existence of the branch abroad has no bearing on the possibility of the home State to tax the group contributions at the receiving companies. Both companies should thus get the same tax treatment with respect to the group contributions."

And was subsequently repeated in *Groupe Steria* when observing that[1258]:

"A difference in treatment such as that at issue in the main proceedings cannot be justified by the need to safeguard the balanced allocation of the power to impose taxes between the Member States. The difference in treatment concerns only incoming

[1257] EFTA Court 7 May 2008, E-7/07, *Seabrokers AS and The Norwegian State, represented by Skattedirektoratet (the Directorate of Taxes)*, paras. 66-67.
[1258] CJ, 2 September 2015, C-386/14, *Groupe Steria SCA v Ministere des Finances et des Comptes publics*, para. 29.

> dividends, received by resident parent companies, so that what is concerned is the fiscal sovereignty of one and the same Member State […]."

And this is also the reason why the CJ correctly rejected the justification based on preserving the balanced allocation of the powers to tax in *Philips Electronics*[1259] by considering that:

> "In a situation such as that in the main proceedings, where the issue is that of transferring to a resident company the losses sustained by a permanent establishment situated in the territory of the same Member State, the power of that Member State to tax the profits (if any) arising from the activity, in its territory, of the permanent establishment is not affected."

And similarly in *Felixstowe Dock*[1260] since the facts involved companies which were resident in the same Member State:

> "Whilst the objective of preserving powers of taxation as between the Member States has been recognised as legitimate by the Court (see, inter alia, Case C-371/10 *National Grid Indus* EU:C:2011:785, paragraph 45) in order to safeguard symmetry between the right to tax profits and the right to deduct losses (see Case C-414/06 *Lidl Belgium* EU:C:2008:278, paragraph 33), in a situation such as that at issue in the main proceedings <u>the power of the host Member State</u>, on whose territory the economic activity giving rise to the losses of the consortium company is carried out, to impose taxes <u>is not at all affected</u> by the possibility of transferring, by relief and to a resident company, the losses sustained by another company, <u>since the latter is also resident for tax purposes in that Member State.</u>"[Underscore BdS]

Later in the *Argenta* case,[1261] the Court confirmed that the balanced allocation of the powers to tax relates to the *shifting of income from one Member State to the other*[1262]. In *Argenta* the CJ dealt with the application of the Belgian notional interest deduction rules to taxpayers having a foreign PE. The notional interest deduction is a tax deduction calculated as a fictitious interest expense on the adjusted equity of the company. *Argenta*, was a bank established in Belgium which carried on an activity in the Netherlands through a PE located therein, the income from which was exempt in Belgium pursuant to the DTC Belgium/Netherlands. Argenta sought to apply the notional interest deduction on its equity but such deduction was denied based on Belgium national law as Belgium did not take into account the net value of the assets of the PE located in the Netherlands. Argenta took the view that the Belgian legislation constituted an infringement to the freedom of establishment inasmuch as investments made in a PE situated in another Member State with which Belgium had concluded a tax treaty did not confer entitlement to the deduction whereas similar investments made in an establishment situated in Belgium did afford entitlement to that deduction. The CJ refused the justification based on the balanced allocation of the powers to tax as, among other arguments, the notional interest deduction

---

[1259] See, ECJ 6 September 2012, C-18/11, *The Commissioners for Her Majesty's Revenue & Customs v Philips Electronics UK Ltd*, para. 26.
[1260] See CJ 1 April 2014, C-80/12, *Felixstowe Dock and Railway Company Ltd and others v The Commissioners for Her Majesty's Revenue & Customs*, para. 30.
[1261] See CJ, 4 July 2013, C-350/11 *Argenta Spaarbank NV v Belgische Staat*.
[1262] See CJ 4 July 2012, C-350/11, *Argenta Spaarbank NV v Belgische Staat*, para. 55.

was an unilateral measure granted by Belgium and did not in fact represented a transfer of income from one Member State to the other.

This confirms[1263] that the balanced allocation of the powers to tax always relates to with the transferring of income – to be understood in the broad sense as meaning both positive[1264] and negative income[1265] – between Member States[1266] leading to a situation that jeopardizes the rights of a Member State to tax the profits generated within its territory[1267].
That also explains the reason why the CJ accepts this justification, notably, in *Marks & Spencer*, *Oy AA* and*X Holding*. In those cases there is a transfer of income generated in one Member State to the other Member State. Such transfer jeopardizes the right of the particular Member State to impose taxes in relation to economic activities undertaken in its own territory. This occurs either because that Member State it has to take into account losses generated in another Member State or because there a is a transfer of positive income from that Member State to another Member State. [1268]

This reasoning is perfectly summarized in the reasoning followed by the Court[1269] in the *SGI* case:

> "63. In the present case, it must be held that <u>to permit resident companies to transfer their profits</u> in the form of unusual or gratuitous advantages <u>to companies</u> with which they

[1263] Similarly although critically on the CJ reasoning, see Peter Wattel, "Argenta Spaarbank: Notional Interest Deduction regime – treatment of foreign permanent establishments is a restriction on the freedom of establishment", *H&I* 2013/12.4, p. 30.
[1264] For instance in cases of non-arm's length transactions, transfer of residence or transfer of assets, transfer of income through group contribution systems.
[1265] Particularly the cases of cross-border loss relief.
[1266] See also the Opinion of AG Kokott delivered on 10 September 2009 in case C-311/08 *Société de Gestion Industrielle (SGI) v Belgian State*, with the references that the situation in SGI would *result in a shift of tax base from one State to the other* (para. 2) and that *to remove income from the scope of taxation in one Member State and subject it to taxation in another State, that is quite simply interference in the balanced allocation of the power to tax* (para.59).
[1267] Concurrently see Servaas van Thiel in "The Direct Income Tax Case Law of the European Court of Justice: Past Trends and Future Developments, 62 *Tax Law Review*, p. 171 who, using as an example of Marks & Spencer states that balanced allocation of the powers to tax is based on the understanding that EU Law should not have the effect that a Member State can no longer tax domestic source income realized by resident tax payers. See also Luc de Broe, "The ECJ's judgment in Argenta: Narrow Interpretation of 'The Preservation of the Balanced Allocation of Taxing Rights between Member States'. A Headache for Designers of Tax Incentives in the Union.", *EC Tax Review* 5 Kluwer Law International BV (2013), p. 211.
[1268] The justification based on the balanced allocation of the powers to tax is in fact a consequence of the overall approach adopted by the CJ. As referred previously this justification arose for the first time in *Marks & Spencer* case in which precisely the Court took into account the effects of the legislation in one Member State in the other Member State. From a dogmatic perspective and as sustained throughout this dissertation, this is an incorrect approach that does not take into account that discriminatory treatment should be assessed exclusively from the perspective of one single Member State.
[1269] See CJ, 21 January 2010, C-311/08 *Société de Gestion Industrielle (SGI) v Belgian State*, paras. 63-64. Similarly the Opinion of AG Kokott delivered on 10 September 2009 in case C-311/08 *Société de Gestion Industrielle (SGI) v Belgian State*, para. 99.

> have a relationship of interdependence that are established in other Member States may well undermine the balanced allocation of the power to impose taxes between the Member States. It would be liable to undermine the very system of the allocation of the power to impose taxes between Member States because, according to the choice made by companies having relationships of interdependence, the Member State of the company granting unusual or gratuitous advantages would be forced to renounce its right, in its capacity as the State of residence of that company, to tax its income in favour, possibly, of the Member State in which the recipient company has its establishment (see, to that effect, Oy AA, paragraph 56).
>
> By providing that the resident company is to be taxed in respect of an unusual or gratuitous advantage which it has granted to a company established in another Member State, the legislation at issue in the main proceedings permits the Belgian State to exercise its tax jurisdiction in relation to activities carried out in its territory." [Underscore BdS]

Interestingly, in the *National Grid Indus* case the CJ considered that *the requirements of coherence of the tax system and the balanced allocation of powers of taxation coincide*[1270]. This statement does not represent that both justifications have the same meaning. Rather, that both justifications are valid in the specific case of exit taxes. On the one hand the coherence of the tax system regards the direct link between the tax exemption granted to unrealised capital gains and the taxation of those gains upon the change of the company's residence[1271] (*legislation of one Member State*). On the other, the balanced allocation of the powers to tax constituted a valid justification because the transfer of a company from one Member State to the other Member State would represent, for the Member State of origin, abandoning its right to tax (possibly in favour of the other Member State) the capital gains which arose within activities generated within its territory (*interaction of two Member States*).[1272]

In general, it is submitted that while there is a relation between the justifications[1273] based on the principle of territoriality, coherence of the tax system and balanced allocation of the

---

[1270] CJ 29 November 2011, C-371/10, *National Grid Indus BV v Inspecteur van de Belastingdienst Rijnmond/kantoor Rotterdam*, paras. 47-48.

[1271] See also the Opinion of AG Kokott delivered on 10 September 2009 in case C-311/08 *Société de Gestion Industrielle (SGI) v Belgian State*, paras. 97-98.

[1272] Similarly, see Servaas van Thiel, "The Direct Income Tax Case Law of the European Court of Justice: Past Trends and Future Developments, 62 *Tax Law Review*, p. 171 or Dennis Weber, "Part, current and future analysis of the coherence of the tax system justification" *EC Tax Review* 2015/1, Kluwer Law International BV, p. 49.

[1273] Similarly see Violeta Almendral, "Tax Avoidance, the "Balanced Allocation of Taxing Powers" and the Arm's Length Standard; an odd Threesome in Need of Clarification" in Isabelle Richelle et al (eds) *Allocating Taxing Powers within the European Union*, MPI Studies in Tax Law and Public Finance 2 (Springer) 2012, p. 158. Ruiz Almendral states that this relation regarding the cohesion of the tax system and balanced allocation of taxing powers are two aspects (respectively internal and external) of the same principle. See also, See Suzanne Kingston "A Light in the Darkness: Recent Developments in the ECJ's Direct Tax Jurisprudence", *Common Market Law Review* 44, p. 1352.

powers to tax, they do not have an exact same meaning.[1274] The justification based on the balanced allocation of the powers to tax complements[1275] the other justifications as it addresses specifically the situations arising from the possible interaction of two tax systems of two different Member States.

16.2.5 Tax avoidance

The Court on several occasions has recognised that, in principle, Member States may be justified in taking otherwise discriminatory tax measures in order to prevent abuse of law. In the case a conduct is found to be abusive, Member States have a legitimate interest to enact domestic measures to prevent such abuse. EU law allows Member States to safeguard their national interests albeit that the domestic measures must observe the EU law requirements, in particular, the principle of proportionality. The rationale underlying such a justification is as follows: in principle, it is quite valid, and indeed fundamental to the idea of an internal market, for taxpayers to arrange their cross-border tax affairs in a manner most advantageous to them. However, this is only permissible insofar as the arrangement is genuine. The adoption of this approach as regards domestic measures aims at striking a balance between the interests of Member States and the EU interests.[1276]

Therefore, the mere fact that a resident company establishes a subsidiary in another Member State cannot, in itself, give rise to a general presumption of tax evasion or tax avoidance[1277] since that company will in any event be subject to the tax legislation of the other Member State and even where such Member State is a low tax jurisdiction.[1278] This became clear, for instance, in case *Eurowings*[1279] where the CJ had the opportunity to clarify

---

[1274] Similarly, see Servaas van Thiel, "The Direct Income Tax Case Law of the European Court of Justice: Past Trends and Future Developments, 62 *Tax Law Review*, p. 182.

[1275] See Wolfgang Schön "Taxing Multinationals in Europe", Max Planck Institute for Tax Law and Public Finance Working Paper 2012-11 (December 2012), p. 11, available at http://ssrn.com/abstract=2185282 (accessed on 7 July 2013).

[1276] See Dennis Weber, *Tax Avoidance and the EC Treaty Freedoms, A Study of the Limitations under EU Law to the Prevention of Tax Avoidance*, EUCOTAX series Vol. 29, Kluwer Law International (2005), p. 170.

[1277] See cases ECJ 16 July 1998, C-264/96 *Imperial Chemical Industries pls v K. Hall Colmer (Her Majesty's Inspector of Taxes)*, para. 26; ECJ 26 September 2000, C-478/98 *Commission v Belgium*, para. 45; ECJ 21 November 2002, C-436/00 *X, Y v Riksskattevert*, para. 62; ECJ 4 March 2004, C-334/02 *Commission v France*, para. 27 or ECJ 12 September 2006, C-196/04 *Cadbury Schweppes plc and Cadbury Schweppes Overseas Ltd v Commissioners of Inland Revenue*, para. 50.

[1278] Similarly in the case of individuals where the CJ affirmed that the transfer of a tax residence to another Member State does not, in itself, imply tax avoidance. Tax avoidance or evasion cannot be inferred generally from the fact that the tax residence of a physical person has been transferred to another Member State and cannot justify a fiscal measure which compromises the exercise of a fundamental freedom. See ECJ 11 March 2004, C-9/02 *Hughes de Lasteyrie du Saillant v Ministère de l"Économie, des Finances et de l"Industrie*, para. 51

[1279] See ECJ 26 October 1999, C-294/97 *Eurowings Luftverkehers AG v Finanzamt Dortmund-Unnam*, para. 44 where the Court considered that:

that low tax rates cannot justify a restriction. Also, for instance, in *Barbier* the Court confirmed[1280] that a national of a Member State cannot be deprived of the right to rely on the provisions of the Treaty on the grounds that he is profiting from tax advantages which are legally provided by the rules in force in the Member State other than his State of residence.
In fact, the choice of a tax regime by setting up a company in that particular Member State is very much part of the freedom of establishment itself. The natural consequence of the absence of tax harmonization in the EU is consequently that taxpayers are free to organize their business in the most tax-efficient way making losses effective in the jurisdiction where it is possible to best use them. In fact it is generally accepted that undertakings may seek to profit from the differences between national tax systems is a legitimate form of economic conduct. In other words, the level of taxation is indeed a factor which both individuals and companies may legally take into consideration when exercising the rights conferred by the TFEU.

The CJ had the opportunity to develop the requirements for national anti-avoidance measures to be allowed. Accordingly, it is possible to derive from case law that a justification based on the fight against tax avoidance is only accepted[1281] where the rules in question have:

> "[…] the specific purpose of precluding from a tax benefit wholly artificial arrangements whose purpose is to circumvent or escape national tax law".

This means that broad anti-avoidance measures which are aimed to cover not only wholly artificial arrangements but also sound business transactions are prohibited. General presumptions of tax avoidance are precluded as the legislation should target specific transactions and be tested on a case by case situation.[1282] In all events, the taxpayer must be

---

> "[…] any tax advantage resulting from providers of services from the low taxation to which they are subject in the Member State where they are established cannot be used to justify less favourable treatment in tax matters given to the recipients of services established in the latter State."

[1280] See ECJ 11 December 2003, C-364/01 *Barbier v Inspecteur van de Belastingdienst Particulieren/Ordernemingen buitlenland te Heerlen*, para. 71.

[1281] See, *inter alia*, cases ECJ 16 July 1998, C-264/96, *Imperial Chemical Industries pls v K. Hall Colmer (Her Majesty's Inspector of Taxes)*, para. 31; ECJ 12 December 2002, C-324/00 *Lankhorst-Hohorst GmbH v Finanzamt Stenfurt*, para. 37; ECJ 12 September 2006, C-196/04 *Cadbury Schweppes plc and Cadbury Schweppes Overseas Ltd v Commissioners of Inland Revenue*,para. 50,

[1282] See, *inter alia*, cases ECJ 17 July 1997, C-28/95 *Leur-Bloem* v *Inspecteur de Belastingsdienst/Ondernemingen Amsterdam 2*, para. 44; ECJ 26 September 2000, C-478/98 *Commission of the European Communities v Kingdom of Belgium*, para. 45; ECJ 12 September 2006, C-196/04 *Cadbury Schweppes plc and Cadbury Schweppes Overseas Ltd v Commissioners of Inland Revenue*, para. 50; ECJ 11 October 2007, Case C-451/05, *Européene et Luxembourgoise d"investissements SA (ELISA) v Directeur général des impots, Ministére public*, para. 91; ECJ 19 November 2009, C-540/07 *Commission of the European Communities v Italian Republic*, para. 58; and CJ 28 October 2010, C-72/09 *Établissements Rimbaud SA v Directeur général des impôts and Directeur des services fiscaux d"Aix-en-Provence*, para. 34.

given the opportunity[1283] (without being subject to excessive administrative constraints) to provide evidence that the structure is not wholly artificial and there is a commercial justification for a particular arrangement.
The Court further expanded the meaning of wholly artificial arrangements as referring to situations that do not involve the pursuit of a *genuine economic activity* (such as letterbox companies) and *lack economic reality*.[1284]

Therefore, in a nutshell, the existence of a abuse is dependent[1285] on whether there is an wholly artificial arrangement which does not correspond to an actual pursue of economic activity on a Member State (objective test) and such conduct or arrangement has the purpose of circumventing the tax laws of the Member State concerned[1286] by creating artificially the conditions laid down in it[1287] (subjective test). More clearly: it concerns an artificial manipulation of transactions with the aim to avoid the lawful application of tax provisions of a Member State such that those transactions are not subject to the lawful taxation of any Member State.[1288]

Within the field of cross-border loss relief, the fundamental issue in the discussion on the justification based on tax avoidance is that the CJ seems to have deviated from its earlier case law.[1289] It appears that the CJ has given a new meaning to tax avoidance which is based

---

[1283] See cases ECJ 12 September 2006, C-196/04 *Cadbury Schweppes plc and Cadbury Schweppes Overseas Ltd v Commissioners of Inland Revenue*, para. 70; ECJ 13 March 2007, C-524/04 *Test Claimants in the Thin Cap Group Litigation v Commissioners of Inland* Revenue, para. 82; CJ 5 July 2012, C-318/10 *Société d'investissement pour l'agriculture tropicale SA (SIAT) v Belgian State*, para. 40; and CJ 7 November 2013, Case C-322/11, *K*, para. 61.
[1284] See ECJ 12 September 2006, C-196/04 *Cadbury Schweppes plc and Cadbury Schweppes Overseas Ltd v Commissioners of Inland Revenue*, paras. 66-70.
[1285] See Dennis Weber, "Abuse of Law in European Tax Law: An Overview and Some Recent Trends in the Direct and Indirect Tax Case Law of the ECJ - part 1" *European Taxation* 6 IBFD (2013), pp. 251-254.
[1286] See ECJ 12 September 2006, C-196/04 *Cadbury Schweppes plc and Cadbury Schweppes Overseas Ltd v Commissioners of Inland Revenue*, para. 55.
[1287] See ECJ 14 December 2000, C-110/99 *Emsland-Stärke GmbH v Hauptzollamt Hamburg-Jonas*, para. 53.
[1288] See Julian Ghosh, *Principles of the Internal Market and Direct Taxation*, Key Haven Publications PLC (2007), p. 215.
[1289] For a general criticism on the lack of clarity of the justification based on abuse it is interesting to refer to the Opinion of AG Geelhoed in case C-524/04 *Test Claimants in the Thin Cap Group Litigation v Commissioners of Inland Revenue* delivered on 13 March 2007, stating in para. 68 that:

> "Nor am I of the view that, in order to conform with Article 43 EC, Member States should necessarily be obliged to extend thin cap legislation to purely domestic situations where no possible risk of abuse exists. I find it extremely regrettable that the lack of clarity as to the scope of the Article 43 EC justification on abuse grounds has led to a situation where Member States, unclear of the extent to which they may enact *prima facie* "discriminatory" anti-abuse laws, have felt obliged to "play safe" by extending the scope of their rules to purely domestic situations where no possible risk of abuse exists. Such an extension of legislation to situations falling wholly outwith its rationale, for purely formalistic ends and causing considerable extra administrative burden for domestic companies and tax authorities, is quite pointless and indeed counterproductive for economic efficiency. As such, it is anathema to the internal market."

not on a narrow concept of wholly artificial arrangements/transactions but rather a broader meaning which is associated with the fact of choosing the most favourable tax regime to relieve the losses. This was far from the reasoning followed in previous case law. This was properly observed by AG Léger who observed that:[1290]

> "In the judgment in Marks & Spencer, for the first time as far as I am aware the Court made a broader application of the justification relating to the counteraction of tax avoidance."

This difference was expressly acknowledged by the Court in its decision in the *Oy AA* case when stating that:[1291]

> "Even if the legislation at issue in the main proceedings is not specifically designed to exclude from the tax advantage it confers purely artificial arrangements, devoid of economic reality, created with the aim of escaping the tax normally due on the profits generated by activities carried out on national territory, such legislation may nevertheless be regarded as proportionate to the objectives pursued, taken as a whole."

The CJ is thus deviating from its case law that has systematically focused on the existence of an artificial arrangement and rejected a justification based on a general provision against tax avoidance. This broader meaning of abuse is also reflected[1292] by the fact that in the field of cross-border loss relief, the CJ does not require that the anti-abuse measure provides a taxpayer the possibility to prove that in a particular situation there is no question of abuse. Criticism has been made in the sense that with this meaning, tax avoidance much resembles the mere protection of tax revenue which had been consistently rejected by the Court as a ground for justification.[1293] By linking tax avoidance in *Marks & Spencer* to the danger of a high tax jurisdiction having its tax base eroded by cross-border loss relief, the Court would be protecting the reduction of the tax base by the losses incurred by a taxpayer resident in another Member State.[1294]

This leads to an interest parallel with the subsequent decision in the *Cadbury Schweppes* case. The question in *Cadbury Schweppes* involved a particular set up very much driven by a favourable tax regime: the use of a low taxed Irish financial services company with minimum business substance. In that case, the CJ considered that there was no risk of tax avoidance by making a reference to its previous case law where it refused general

---

[1290] See the Opinion of AG Léger delivered on 2 May 2006 in case C-196/04 *Cadbury Schweppes and Cadbury Schweppes Overseas v Commissioners of Inland Revenue*, para. 93.

[1291] See ECJ 18 July 2007, C-231/05 *Oy AA*, para. 63.

[1292] See Dennis Weber, "Abuse of Law in European Tax Law: An Overview and Some Recent Trends in the Direct and Indirect Tax Case Law of the ECJ - part 2" *European Taxation* 7 IBFD (2013), pp. 258 or Yariv Brauner, Ana Paula Dourado & Edoardo Traversa, "Ten Years of Marks & Spencer", 43 Intertax 4, *Kluwer Law International BV* (2015), p. 308.

[1293] See Julian Ghosh, *Principles of the Internal Market and Direct Taxation*, Key Haven Publications PLC (2007), p. 214.

[1294] Similarly Peter J. Wattel, "Judicial Restraint and Three Trends in the ECJ's Direct Tax Case Law", 62 *Tax Law Review* (2008), p. 210. Wattel considers that this broader meaning of tax avoidance developed by the Court allows more general tax base protection measures.

presumptions of tax evasion[1295] and accepting restrictions to the fundamental freedoms only to cases where the measure at stake addresses wholly artificial arrangements aimed at circumventing the application of the Member State concerned.[1296] Conversely, in *Marks & Spencer* and subsequently in *OyAA*, the CJ concluded that a foreign loss relief for truly active companies subject to the regular corporate tax rates represented a (presumed) risk of tax avoidance. The Court's reasoning may have been influenced by the specific mechanisms of the group relief/group contribution systems which allow the transferring of losses in all directions. Comparatively, in *Lidl Belgium* in a situation also involving cross-border loss relief, the Court disregarded the argument based on tax avoidance. A possible explanation to this different outcome is due to the existing differences[1297] of loss-relief within companies of a group and situations involving permanent establishments. In the first scenario, two different taxpayers are involved, while in the second, this occurs within the same company. Cross-border loss relief in situations involving head office and PE located in different jurisdictions is actually typical in situations where two jurisdictions have not concluded a tax treaty and/or they apply the credit method for double taxation relief. The different situation when dealing with cross-border loss relief in a PE scenario is particularly relevant if one considers one of the main arguments of the CJ: the possibility to choose where the losses have been taken into account. There is no "loss trafficking" between different taxpayers as it may occur regarding two companies of the same group[1298] and there is no possibility to choose a jurisdiction in which to use those losses: they can only be used vertically and upwards from the PE to the head office.

An attempt to reconcile these judgments could be based on the following line of arguments. First of all, there is a difference in the way the Member States argued in cases involving cross-border loss relief and also in the way that the CJ accepted the justifications brought forward by Member States.[1299] The broader meaning followed by the CJ when compared to

---

[1295] See cases ECJ 16 July 1998, C-264/96 *Imperial Chemical Industries pls v K. Hall Colmer (Her Majesty's Inspector of Taxes)*, para. 26; ECJ 26 September 2000, C-478/98 *Commission of the European Communities v Kingdom of Belgium,* para. 45; ECJ 21 November 2002, C-436/00 *X and Y v Riksskatteverket* para. 62; and ECJ 4 March 2004, C-334/02 *Commission of the European Communities v French Republic*, para. 27.

[1296] See ECJ 12 September 2006, C-196/04 *Cadbury Schweppes plc and Cadbury Schweppes Overseas Ltd v Commissioners of Inland Revenue*, paras. 50-52.

[1297] See Communication from the Commission to the Council, The European Parliament and the European Economic and Social Committee, "Tax Treatment of Losses in Cross-Border Situations", COM(2006) 824 final of 19 December 2006, p. 3

[1298] See Wolfgang Schön, "Loosing Out at the Snooker Table: Cross-Border Loss Compensation for PE´s and the Fundamental Freedoms", in L. Hinnekens and P. Hinnekens (eds.) *A Vision Within and Outside the European Borders, Festschrift in honor of Frans Vanistendael* Kluwer Law International The Netherlands (2008), p. 826 or Monsenego, Jérôme *Taxation of Foreign Business Income Within the European Internal Market*, IBFD Doctoral Series Vol. 22 (2012), p. 482.

[1299] See Luc de Broe, *International Tax Planning and Prevention of Abuse: A Study under Domestic Tax Law, Tax Treaties and EC Law in Relation to Conduit and Base Companies*, IBFD Doctoral Series Vol. 14 (2008), p. 821.

the narrow concept of wholly artificial arrangements is that the first one does not constitute an autonomous ground of justification.

From the outset, it is clear that there is a close nexus between balanced allocation of taxing powers and prevention of tax avoidance in the sense that both of these justifications pursue a related aim.[1300] This is expressly acknowledged by the Court with a reference that:[1301]

> "It should be noted at the outset that the objectives of safeguarding the balanced allocation of the power to impose taxes between Member States and the prevention of tax avoidance are linked."

This link is apparent, not only from the case-law on cross-border loss relief but in other cases where the justification based on tax avoidance was argued.[1302]
But the difference appears to be that such broader meaning is only accepted together with the justification based on the balanced allocation of taxing powers.[1303]

This understanding is properly illustrated in the *SGI* case[1304] when the CJ stated that:

> "65. […] as regards the prevention of tax avoidance, it should be recalled that a national measure restricting freedom of establishment may be justified where it specifically targets wholly artificial arrangements designed to circumvent the legislation of the Member State concerned.
>
> 66. In that context, national legislation which is not specifically designed to exclude from the tax advantage it confers such purely artificial arrangements – devoid of economic reality, created with the aim of escaping the tax normally due on the profits generated by activities carried out on national territory – may nevertheless be regarded as justified by the objective of preventing tax avoidance, taken together with that of preserving the balanced allocation of the power to impose taxes between the Member States."

And this was also clearly stated in the Opinion of AG Kokott in case *National Grid Indus*:[1305]

> "However, the prevention of tax avoidance may be considered an independent ground of justification only where the restrictive measure specifically aims to prevent conduct involving the creation of wholly artificial arrangements which do not reflect economic

---

[1300] Koen Lenaerts, "The Concept of "Abuse of Law" in the Case Law of the European Court of Justice in Direct Taxation", 22 *Maastricht Journal of European and Comparative Law* (2015), p. 340.
[1301] See ECJ 18 July 2007, C-231/05 *Oy AA*, para. 62.
[1302] See CJ 5 July 2012, C-318/10 *Société d'investissement pour l'agriculture tropicale SA (SIAT) v Belgian State*, para. 48.
[1303] Concurrently see Philip Baker, "Transfer Pricing and Community Law: The SGI case", 38 *Intertax* 4 (2010) Kluwer Law International BV, p. 195 or Robert Neyt & Steven Peeters, "Balanced Allocation and Coherence: Some thoughts in Light of Argenta and K", *EC Tax Review* 2014/2, Kluwer Law International BV, p. 72.
[1304] CJ, 21 January 2010, C-311/08 *Société de Gestion Industrielle (SGI) v Belgian State*, paras. 65-66.
[1305] See Opinion of AG Kokott delivered on 8 September 2011 in case C-371/10, *National Grid Indus BV v Inspecteur van de Belastingdienst Rijnmond / kantoor Rotterdam*, para. 102.

> reality, with a view to escaping the tax normally due on the profits generated by activities carried out on national territory."

And later in the *Oy AA* [1306] case with:

> "62. Strictly speaking, prevention of this form of 'tax avoidance' is not a separate ground of justification which can justify a restriction on freedom of establishment. The fact that undertakings seek to profit from the differences between national tax systems is a legitimate form of economic conduct, and is indeed inevitable in an internal market in which taxation of corporations is not harmonised. Accordingly, an undertaking cannot simply be prevented from moving its seat to another Member State which offers more favourable conditions of taxation.
>
> 63. Restrictions on the fundamental freedoms can be justified only if such 'tax optimisation' also undermines the allocation of powers to impose taxes between Member States."

Secondly there is a different factual background in which the CJ used these two different meanings of tax avoidance. In that regard AG Léger[1307] opined that there was an important difference because the risk of tax avoidance associated with group taxation regimes (with reference to the *Marks and Spencer* case) could be created by the transfer of losses of foreign subsidiaries to a resident parent company which could be done by means of a mere adjustment of the accounts not connected to an underlying economic activity.[1308] Differently, transactions between a CFC and its parent company which result in reducing the taxable profits of the latter could be regarded as tax avoidance only if the establishment of that subsidiary and those transactions constitute a wholly artificial arrangement aimed at circumventing national law. Therefore in situations involving underlying real economic activities it appears that the CJ follows its standard of only allowing prevention of tax avoidance in the case it targets only artificial arrangements. Ultimately this may suggest

---

[1306] See Opinion of AG Kokott delivered on 12 September 2006 in case C-231/05, *Oy AA*, paras. 62 and 63.

[1307] See the Opinion of AG Léger delivered on 2 May 2006 in case C-196/04, *Cadbury Schweppes and Cadbury Schweppes Overseas v Commissioners of Inland Revenue*, para. 108:

> " In addition, the provision of services by a subsidiary to its parent company is an economic activity which takes the form of transactions between distinct legal persons. The fact that those companies are linked does not prevent the pricing of those transactions from being determined under normal competitive conditions. The risk of tax avoidance in connection with such transactions is not therefore comparable to that which would be created by the transfer of losses of foreign subsidiaries to a resident parent company, at issue in the *Marks and Spencer* case, since such a transfer of losses would be done by means of merely adjusting the accounts. Transactions between a CFC and its parent company which result in reducing the taxable profits of the latter can therefore be regarded as tax avoidance only if the establishment of that subsidiary and those transactions constitute, according to the case-law cited above, a wholly artificial arrangement aimed at circumventing national law."

[1308] See Luc de Broe, *International Tax Planning and Prevention of Abuse: A Study under Domestic Tax Law, Tax Treaties and EC Law in Relation to Conduit and Base Companies*, IBFD Doctoral Series Vol. 14 (2008), p. 822 or Marcel Schaper, "The Need to Prevent Abusive Practices and Fraud as a Composite Justification", 23 EC Tax Review 4 (2014), pp. 226-227.

that the difference involving the higher risk of tax avoidance in cases of cross-border loss relief within the field of group taxation regimes allow a more flexible and less strict approach to tax avoidance by the CJ.

This understanding finds support in the Court's decision in the *K* case[1309]. This case dealt[1310] with a Finish resident taxpayer which realized a loss upon a sale of immovable property located in France. As French law did not provided for the possibility to deduct such loss Mr K claimed for such a deduction in Finland. The claim was made based on a possible breach of the free movement of capital as Finnish tax law provided for the possibility of losses arising on the sale of Finnish property to be deductible against other capital gains.

Differently from the case-law on cross-border loss relief within the context of group taxation regimes, the Court rejected the justification based on the risk of preventing tax avoidance and returned to its standard of accepting this justification only when the legislation at stake is specifically intended to prevent wholly artificial arrangements from benefiting from a tax advantage.[1311]
This dual standard of the justification on tax avoidance used by the CJ actually appears to confirm that that this justification means different things in different contexts.[1312]

But the outcome of this case law and the different standard applied by the Court is questionable if one considers that (cross border) loss relief aims at no more than being taxed fairly on consolidated profits rather than being over taxed profits in Member State and isolated from losses in other Member State.[1313] That being the case, then the losses of a loss-making subsidiary resident in one Member State should be relieved against the profits of a company of another Member State irrespective of whether this company is resident in a high tax or low tax jurisdiction. The issue of loss-trafficking is irrelevant if one considers that the fundamental freedoms are applicable to the whole of the internal market and to all Member States and therefore, it should be irrelevant as to where the losses are surrendered.

In my view, it appears that the Court considers that the risk of tax avoidance is actually intrinsic to the nature of the group relief system which is (among other possible benefits) to allow the transfer of losses purely for tax purposes. There is typically a tax advantage which associated with forming a tax group. But such tax advantage is the precise purpose of a group consolidation mechanism with a view to reflect economy reality: to allow that a

---

[1309] CJ 7 November 2013, Case C-322/11, *K*.
[1310] For an overview of this case see Marie-Aline Peetermans and Melanie Staes, "K v Finland: EU Developments in the Are of Foreign Loss Deduction Rules", *EC Tax Review* 2014/1, Kluwer Law International BV pp. 56-59.
[1311] CJ 7 November 2013, C-322/11 *K,* paras. 61-63.
[1312] See Julian Ghosh, "*Cadbury Schweppes*: Breach, Abuse Justification and Why They Are Different", in Rita de la Feria and Stefan Vogenauer (eds.) *Prohibition of Abuse of Law – A New General Principle of EU Law?* Hart Publishing (2011), p. 468.
[1313] See Claus Staringer, "Where Does Foreign Loss Utilization Go in Europe?", *SWI* (2007), p. 10.

group, independent of how it is organized from a legal point of view, is taxed as an effective single taxpayer. In that sense, this does not constitute a manipulation of transactions such to avoid the lawful application of tax provisions of any Member State as in the traditional meaning of tax avoidance.

More clearly, it is inherent to the nature of group taxation regime to provide tax advantages and therefore, the rules operate *always* on a basis of inherent artificiality. In that sense, there is no arrangement from the taxpayer to create artificial conditions to benefit from such regime in order to benefit from an undue tax advantage. Such artificiality and the corresponding tax benefits derive from the regime itself. That is the reason why the CJ does not apply – and *cannot* apply - its general abuse criterion in this specific case of cross-border group relief: the CJ case law requires law such that anti-abuse measures are only applicable in an individual cases (that is, on a case-by-case basis) in order to reflect the specific circumstances that indicate abuse.[1314] But that criterion simply cannot possibly be applied in group taxation situations due to the inherent artificiality which makes the risk of tax avoidance intrinsic to the functioning of these regimes.

The fact that group taxation regimes are always based on artificiality explains not only the general criterion followed by the CJ but the fact that they become "linked" with the justification based on the balanced allocation of the powers to tax. As soon as transfers of (positive or negative) income are allowed between companies in different Member States, potentially such income may be transferred from the Member State in which the underlying economic activities are carried on to another Member State. Therefore, the risk of tax avoidance exists by the very nature of group taxation regimes, but only because there is a cross-border element which leads to jeopardizing the balanced allocation of the powers to tax. This conclusion can find support in the Court's reasoning followed in the *Felixstowe Dock* case. In that case, the Court correctly rejected[1315] the justification based on preserving a balanced allocation of powers of taxation between the Member States because both the surrendering company and the company claiming the loss relief were resident in the same Member State. The Court then analysed a justification based on the need to prevent tax avoidance and returned to its standard that:[1316]

> "[…] in order for a restriction on freedom of establishment to be justified on such grounds, the specific objective of that restriction must be to prevent conduct involving the creation of wholly artificial arrangements which do not reflect economic reality with a view to escaping the tax normally due on the profits generated by activities carried out on national territory."

[1314] See Dennis Weber, "Abuse of Law in European Tax Law: An Overview and Some Recent Trends in the Direct and Indirect Tax Case Law of the ECJ - part 2" *European Taxation* 7 IBFD (2013), p. 318.
[1315] See CJ 1 April 2014, C-80/12 *Felixstowe Dock and Railway Company Ltd and others v The Commissioners for Her Majesty's Revenue & Customs*, para. 30.
[1316] See CJ 1 April 2014, C-80/12 *Felixstowe Dock and Railway Company Ltd and others v The Commissioners for Her Majesty's Revenue & Customs,* para. 33.

Therefore, the mere prevention of abuse with the broad criterion followed by the Court appears to serve the purpose of preserving the balanced allocation of the powers to tax.[1317] But avoid jeopardizing the balanced allocation is the ultimate goal irrespective of effective abuse or not: the mere risk of shifting income exists, and therefore, should from the outset be prevented. This conclusion is actually clearly reflected in the words of AG Kokott in the Opinion[1318] delivered in the *SGI* case:

> "59. Such abusive arrangements therefore constitute simply a particular form of interference in the allocation of the power to tax between Member States. If artificial arrangements are adopted in order to remove income from the scope of taxation in one Member State and subject it to taxation in another State, that is quite simply interference in the balanced allocation of the power to tax. Accordingly, combating such practices does not, as a general rule, constitute an end in itself but pursues the broader objective of ensuring the right of a Member State to exercise its tax jurisdiction in relation to activities carried out on its territory.
> 60. That does not imply, however, that the justification of a balanced allocation of the power to tax may be invoked only when the conditions for invoking the justification of combating abusive practices also are satisfied. Depending on the form and the objective of the national legislation under consideration, the safeguarding of a balanced allocation of the power to tax may be decisive either in itself or in conjunction with other grounds of justification." [Underscore BdS]

This is also confirmed in the judgment of the CJ in the *National Grid Indus*[1319] case where the Court accepted the justification based the balanced allocation of the powers to tax but rejected the argument based on the need to prevent tax avoidance.

Overall the prevention of tax avoidance, therefore, constitutes a manifestation or a sub-category of the justification of the balanced allocation of the powers to tax between Member States in the sense that represents a risk that jeopardizes the balanced allocation of taxing rights.

16.2.6 Double use of losses

One of the accepted justifications[1320] when dealing with cross-border loss relief is the prevention of double use of losses. The underlying reasoning of the CJ is to prevent overcompensation deriving from the concurrent use of benefits in two different tax jurisdictions.[1321] While the meaning of this justification appears to be clear – prevent that

[1317] In this sense see Opinion of AG Wattel of 11 July 2008, in *BNB* 2008/305.
[1318] See Opinion of AG Kokott delivered on 10 September 2009 in case C-311/08 *Société de Gestion Industrielle (SGI) v Belgian State*, paras. 59-60.
[1319] See CJ 29 November 2011, C-371/10 *National Grid Indus BV v Inspecteur van de Belastingdienst Rijnmond/kantoor Rotterdam*, paras. 46-48 and paras. 83-84.
[1320] For an analysis on whether the double use of losses constitutes a self-standing justification see 16.3 *infra*.
[1321] See Wolfgang Schön, "Loosing Out at the Snooker Table: Cross-Border Loss Compensation for PE´s and the Fundamental Freedoms", in L. Hinnekens and P. Hinnekens (eds.) *A Vision Within and Outside the*

losses being used twice[1322] – the outcome of the CJ's case law in the field of cross-border losses allows drawing some fundamental distinctions on the situations in which the double use of losses can constitute an acceptable justification. In that regard, a classification can be made between:

i. *Bilateral double deduction of single type of losses* – which is the situation addressed *inter alia* in *Marks & Spencer* and deals with the same losses being taken into account twice in two different jurisdictions. The CJ ruled that a parent company is, in principle, allowed to reject the deduction of foreign operational losses incurred by its foreign subsidiaries, except when those losses are final and in that sense, they can no longer be taken into account in the State of residence of those subsidiaries. The prevention of double use of losses is only accepted as a valid justification if the power of a Member State to tax the income generated in that Member is impaired by accepting loss relief. The prevention of double use of losses is only accepted as a valid justification if the power of a Member State to tax the income generated in that Member is impaired by accepting loss relief. As the CJ had the opportunity to clarify in *Philips Electronics UK*,[1323] such justification cannot be relied on in a situation where the losses result from an economic activity carried on in the territory of the Member State that also has the power to tax the profits generated in that Member State. This irrespective of whether the Member State of a non-resident group member grants additional relief for those same losses. This is understandable in the light of the accepted principle of international tax law that priority is given to the source state to tax source income[1324] (both profits and losses). Therefore, the double use of losses is a valid justification only for the Member State that has to take into account losses recorded in other Member State but not for the Member State in which those losses were incurred.[1325] As a further argument, it can be added such as AG Kokott held in her Opinion in *SCA Holding* case:[1326]

European Borders, Festschrift in honor of Frans Vanistendael Kluwer Law International The Netherlands (2008), p. 823.

[1322] See, *inter alia*, ECJ 13 December 2005, Case C-446/03, *Marks & Spencer plc v David Halsey (Her Majesty's Inspector of Taxes)*, para. 47; ECJ, 29 March 2007, Case C-347/04, *Rewe Zentralfinanz eG v Finanzamt Koln-Mitte*, p. 2668, para. 47; ECJ 15 May 2008, Case C-416/06, *Lidl Belgium GmbH & Co. KG v Finanzamt Heilbronn*, para. 35; or CJ, 7 November 2013, Case C-322/11, *K*, paras. 56-58.

[1323] See case CJ 6 September 2012, C-18/11, *The Commissioners for Her Majesty's Revenue & Customs v Philips Electronics UK Ltd*, paras. 30-33. See also the Opinion of AG Kokott delivered on 19 April 2012 in case C-18/11, *The Commissioners for Her Majesty's Revenue & Customs v Philips Electronics UK Ltd*, paras. 49-50.

[1324] See AG Geelhoed Opinion delivered on 23 February 2006, in case C-374/04 *Test Claimants in Class IV of the ACT Group Litigation*, para. 51. As said, this principle has been accepted by the Court notably in *Lidl Belgium* as a justification for the head office State to refuse to give relief for the losses incurred in the PE State. See ECJ 15 May 2008, C-416/06 *Lidl Belgium GmbH & Co. KG v Finanzamt Heilbronn*, paras. 50-51.

[1325] See ECJ 27 November 2008, C-418/07 *Société Papillon v Ministére du Budget, des Comptes Publics et de la Fonction Publique*, paras. 37-39.

[1326] See Opinion of AG Kokott delivered on 27 February 2014, in Joined Cases C-39/13, C-40/13 and C-41/13, *Inspecteur van de Belastingdienst Noord/kantoor Groningen v SCA Group Holding BV (C-39/13), X*

> "[…] it is two sides of the same coin if, on the one hand, the Member State of origin, as is recognised, is not required to draw up its tax rules on the basis of those in another Member State in order, in all circumstances, to prevent a difference in treatment of cross-border establishments and, on the other hand, it also cannot rely on the tax rules of another Member States as justification for a difference in treatment of its own."

This implies in turn that the double use of losses is not an autonomous justification but it is relevant only when it jeopardizes the balanced allocation of the powers to tax between Member States.[1327]

- *Bilateral double deduction of dual type of losses* - concerns situations of double deduction of different type of losses in two different jurisdictions. This was the situation dealt with in case *Rewe Zentralfinanz*. As previously referred[1328], this case dealt with the German tax legislation regarding the deduction for tax purposes of partial write-downs to the value of shares in a company which, at the time, provided for a different treatment according to whether the company concerned was established within or outside Germany. The Court rejected the justification based on the danger of double use of losses[1329] based on the difference between the two types of losses at stake. The losses incurred both by the German company derived from the write-down of the participation's value while the losses of the foreign subsidiary referred to operational losses. Therefore, it considered that those losses could not amount to using the same losses twice because the writing down of the book value of the shareholdings was taken into account only regarding the parent company and was subject, for tax purposes, to a different tax treatment from that which applies to the losses incurred by the subsidiaries. The CJ made clear that losses of one type incurred in one Member State (of the parent company as a result of the fall in value of its shares in foreign subsidiaries) cannot be confused with losses incurred by the subsidiaries themselves located in other Member States. The justification based on the double use of losses, therefore, amounts to the *same losses*[1330] being used twice in two Member States and not to *two different types* of losses being used in two different Member States. This conclusion is understandable: one of the issues of extending domestic legislation to cross-border losses is precisely the danger that the same losses may be used in two different Member States. This situation is different. While it is correct that there is an economic nexus between the two types of losses, the fact is that the double advantage is not limited to cross-border situations as in the former scenario. On the contrary, the fact that, in pure domestic situations, a parent

---

AG, X1 Holding GmbH, X2 Holding GmbH, X3 Holding BV, D1 BV, D2 BV, D3 BV, v Inspecteur van de Belastingdienst Amsterdam (C-40/13) and Inspecteur van de Belastingdienst Holland- Noord/kantoor Zaandam v MSA International Holdings BV, MSA Nederland BV (C-41/13), para. 50.

[1327] See *infra* 16.3 for further analisys on this issue of the value of each of "combined justifications".

[1328] See *supra* 14.2.4.5.

[1329] See ECJ 29 March 2007, C-347/04 *Rewe Zentralfinanz eG v Finanzamt Koln-Mitte*, para. 47-48.

[1330] See ECJ 29 March 2007, C-347/04 *Rewe Zentralfinanz eG v Finanzamt Koln-Mitte*, para. 48.

company with subsidiaries in Germany could offset write-downs to the book value of its shares in those subsidiaries against its taxable profits does not preclude the subsidiaries from taking their own losses into account for tax purposes[1331]. Therefore, there is no connection between the losses being taken into account twice and the extension of the legislation to cross-border situations. This case law again confirms the intrinsic link between the double use of losses and the balanced allocation of the powers to tax. Very clearly this is reflected in para. 47 of *Rewe Zentralfinanz* when the CJ states that:

> "While it must be accepted that the Member States must be able to prevent the danger of tax losses being used twice (see *Marks & Spencer*, paragraph 47), it must be pointed out that the losses at issue in the main proceedings are not, as the Advocate General stated at points 37 and 38 of his Opinion, comparable to losses incurred by subsidiaries abroad which the resident parent company requires them to surrender to it in order to reduce its taxable profits, which was the position in *Marks & Spencer*."

The final part of this paragraph, when referring to the fact these losses are not comparable to losses of foreign subsidiaries which, when surrendered, would reduce the taxable profits of the parent company clearly implies the reference to the balanced allocation of the powers to tax. This is even more clear when considering a particular sentence[1332] of the Opinion of AG Maduro, to which the CJ makes reference, who states that in this case there was *no specific connection with a transfer of activity to another Member State*, that is, no shift of income which is the standard for endangering the balanced allocation of the powers to tax.

Confirming this same reasoning it is worth referring to the Opinion of AG Kokott in the *Philips Electronics* case:[1333]

> "Against this background, the prevention of the double use of losses cannot be an end in itself. The aspect of prevention of the double use of losses, as understood so far in the case-law, solely concerns the question whether a Member State has the right, in the context of the balanced allocation of the powers of taxation, not to take into account a loss in the taxation of its taxpayer. That right may stem from the fact that the loss is taken into account in another Member State under whose fiscal jurisdiction the taxation of the profits from the relevant activity falls. The loss is attributed to that other Member State because it taxes the relevant profits. Use in a further Member State which does not tax the profits would possibly be "double"."

- *Unilateral double deduction of dual type of losses* – concerns situations of double deduction of different type of losses in the same jurisdiction and was dealt with in the *Papillon* case. One of the arguments to justify the discriminatory treatment of the French regime *d'integration fiscal* – the requirement of an uninterrupted chain

[1331] See ECJ 29 March 2007, C-347/04 *Rewe Zentralfinanz eG v Finanzamt Koln-Mitte*, para. 49.
[1332] See Opinion of AG Maduro delivered on 31 May 2006, in case C-347/04 *Rewe Zentralfinanz eG v Finanzamt Koln-Mitte*, para. 38.
[1333] See Opinion of AG Kokott delivered on 19 April 2012, in case C-18/11 *The Commissioners for Her Majesty's Revenue & Customs v Philips Electronics UK Ltd*, para. 64.

of French resident companies – was the need to ensure the coherence of the tax system[1334] which would be affected due to a possible double deduction of losses: first at the level of the French subsidiary for the operational (direct) losses incurred, and second at the level of the parent company for the depreciation of its holding on the intermediate subsidiary (since typically this subsidiary will provide for the depreciation in its holding on the sub-subsidiary with the consequent similar write down by the parent company in the subsidiary. In a pure domestic situation those depreciations would be disregarded. The CJ rejected the argument based on the double use of losses based on the fact that - as previously stated - differently from *Marks & Spencer*, these were merely domestic losses concerning companies resident in a single Member State**.** However, the CJ considered the restriction to be justified based on the need to ensure the coherence of the tax system but in breach of the principle of proportionality as the French rules did not allow the possibility to demonstrate that there was no double use of the losses. It is therefore possible that losses of different types may constitute a valid justification but, differently from *Rewe Zentralfinanz*, only when they are potentially deductible in the same jurisdiction. And, in any case, the double use of losses was not, in itself, the accepted justification[1335] but rather it materialized the accepted justification based on the need to preserve the coherence of the tax system. More clearly: the CJ considers that the risk that one Member State takes into account double use of losses is a matter of cohesion of the tax system. This conclusion is clear from the *SCA Group Holding* case. Similar to the *Papillon* case, one of the scenarios under scrutiny was the requirement that all the companies within the chain of a tax group had to be resident in the Netherlands. The arguments used by the Netherlands were somewhat similar to the those already referred to concerning the similar group structure in *Papillon*. In *SCA Group Holding,* the CJ analysed precisely (giving a negative answer) whether the above restriction could be justified by an overriding reason in the public interest based on the coherence of the Netherlands tax system, related to the prevention of the double use of losses.[1336]

The CJ case law demonstrates that the double use of losses is only accepted as a justification when there is a transfer of one loss from one jurisdiction to the other jurisdiction therefore affecting the balanced allocation of the powers to tax between

[1334] See ECJ 27 November 2008, C-418/07 *Société Papillon v Ministére du Budget, des Comptes Publics et de la Fonction Publique,* paras. 41-42.

[1335] Another possible explanation in this particular case is that even without group taxation the result would have been similar, i.e. even without the application of the group integration regime there was potentially already a unilateral double deduction of dual type of losses in France.

[1336] See CJ 12 June 2014, Joined Cases C-39/13, C-40/13 and C-41/13 *Inspecteur van de Belastingdienst Noord/kantoor Groningen v SCA Group Holding BV (C-39/13), X AG, X1 Holding GmbH, X2 Holding GmbH, X3 Holding BV, D1 BV, D2 BV, D3 BV, v Inspecteur van de Belastingdienst Amsterdam (C-40/13) and Inspecteur van de Belastingdienst Holland- Noord/kantoor Zaandam v MSA International Holdings BV, MSA Nederland BV (C-41/13)*, para. 32.

Member States. This allows to conclude, and will be further confirmed in the following section, that the double use of losses is also a sub-category or a manifestation of the balanced allocation of the powers to tax and not an autonomous justification.[1337]

16.3 The use of combined justifications

A remarkable feature that emerged after *Marks & Spencer* was the number of combined justifications[1338] which were necessary to justify the restriction found to the freedom of establishment. As observed, the Court did not follow its traditional approach of analysing each justification separately but considered that the existing restriction was justified by three combined justifications. This new approach obviously gave rise to questions as to the articulated justifications and which raised questions about what could be the reasoning to be followed by the Court in future cases.

A *first question* was whether the three justifications used would always be required or, on the contrary, two or even maybe one would suffice.[1339] Taken literally, it could hardly be seen how the three justifications used in *Marks & Spencer* could be *taken together*: If the balanced allocation of taxing rights as applied by the CJ, would be jeopardised because the taxable base could be increased in one Member State and reduced in the other Member State to the extent of the losses transferred,[1340] that would necessarily mean that there would never be a situation of dual use of losses because the to the cross-border use of the losses in one Member State would correspond an offset in the Member State of transfer. A possible understanding of this requirement of combined justifications would be that there would be a possibility that any of these risks could occur in case the UK group taxation system would be extended to cross-border situations but the three justifications do not need to be cumulative.[1341]

[1337] In the sense that double use of losses can never be an autonomous justification, see Werner Haslehner, "Consistency" and Fundamental Freedoms: The case of Direct Taxation", *Common Market Law Review* 50, Kluwer Law International (2013), p. 752, footnote 39. Haslehner argues that the double use of losses corresponds to double non-taxation in cross-border situations. Therefore and since the CJ considers juridical double taxation to be outside the scope of the fundamental freedoms, its mirror image, double non-taxation, would be as well excluded as a possible (independent) justification.

[1338] The use of combined justifications also occurs outside the scope of case-law involving group taxation regimes. See, *inter alia*, cases CJ 21 January 2010, C-311/08 *Société de Gestion Industrielle (SGI) v Belgian State*, para. 66; or CJ 5 July 2012, C-318/10, *SIAT SA v État Belge*, para. 48.

[1339] Compare, for instance, the CJ's reasoning adopted in ECJ, 18 July 2007, Case C-231/05, *Oy AA* and in *ECJ 15 May 2008, Case C-416/06, Lidl Belgium GmbH & Co. KG v Finanzamt Heilbronn* further analysed in 14.2.4 *infra*.

[1340] See ECJ 13 December 2005, C-446/03 *Marks & Spencer plc v David Halsey (Her Majesty's Inspector of Taxes)*, para. 46.

[1341] See Sjoerd Douma and Caroline Naumburg, "Marks & Spencer: Are National Tax Systems Éclairé?", *European Taxation* 9, IBFD (2006), p. 433.

As stated, this assumption of the CJ on an existing matching between decrease of tax base in one country and increase in the other is based on a misunderstanding of the functioning of the UK group relief in particular and of situations involving cross-border losses in general.[1342] In fact, while that assumption is correct in a domestic situation it does not occur in a cross-border situation.[1343] Member States have their own tax systems which are applied independently from each other. It is highly unlikely (not to say that it simply does not occur) that one Member State would recognize the effects of the group taxation regime of another Member State and therefore, increase the tax base in the amount of the losses which are accepted cross-border.

In *Rewe Zentralfinanz,* the Court had the opportunity to reaffirm the threshold of three combined justifications. By focusing on the interpretation of the balanced allocation to impose taxes between Member States it considered[1344]- following the Opinion of AG Maduro on this case[1345] - that this justification was only accepted in conjunction with two other grounds: the double use of losses and tax avoidance.
However, in subsequent case law, this threshold was not applied and the CJ accepted less than three justifications. It is interesting to speculate what possible reasons could have led to such differentiation.

[1342] The same (incorrect) assumption was repeated in other cases. See cases ECJ 29 March 2007, C-347/04 *Rewe Zentralfinanz eG v Finanzamt Koln-Mitte*, para. 42; ECJ 15 May 2008, C-416/06 *Lidl Belgium GmbH & Co. KG v Finanzamt Heilbronn*, para. 32; and ECJ 25 February 2010, C-337/08 *X Holding B.V. v Staatssecretaris van Financiën*, para. 29.

[1343] Interestingly, this seems to have been more properly acknowledged in the *OyAA* case as the Court statement does not assume a necessary and automatic matching between the profit transferred in one Member State and its corresponding increase in the tax base of the receiving company in another Member State:

> " […] to accept that an intra-group cross-border transfer, such as that at issue in the main proceedings, may be deducted from the taxable income of the transferor would result in allowing groups of companies to choose freely the Member State in which the profits of the subsidiary are to be taxed, by removing them from the basis of assessment of the latter and, <u>where that transfer is regarded as taxable income in the Member State of the parent company transferee</u>, incorporating them in the basis of assessment of the parent company. That would undermine the system of the allocation of the power to tax between Member States because, according to the choice made by the group of companies, the Member State of the subsidiary would be forced to renounce its right, in its capacity as the State of residence of that subsidiary, <u>to tax the profits of that subsidiary in favour, possibly, of the Member State in which the parent company has its establishment</u>" [underscore BdS]

See ECJ 18 July 2007, C-231/05 *Oy AA*, para. 56.

[1344] See ECJ 29 March 2007, C-347/04 *Rewe Zentralfinanz eG v Finanzamt Koln-Mitte*, para. 41.

[1345] See Opinion of AG Maduro delivered on 31 May 2006, in case C-347/04 *Rewe Zentralfinanz eG v Finanzamt Koln-Mitte*, para. 34:

> " […] the justification based on the preservation of the allocation of the power to impose taxes between Member States cannot be separated from two other justifications relating, first, to the risk of losses being taken into account twice and, secondly, to the risk of tax avoidance."

A first example may be found in the *Oy AA* case. In its judgment, the Court accepted a combination of just two factors[1346] since it considered that the risk of dual use of losses did not play any role in the specific case because the Finnish group contribution system did not refer to the transfer of losses but to profits[1347]. It is interesting to note in this regard that AG Kokott in her opinion seems to have reached a different conclusion. She expressly held[1348] that the *Marks & Spencer* formulation "makes it clear that all three elements are closely linked to one another and cannot be viewed in isolation". Therefore, and contrary to the CJ, AG Kokott analysed the element of justification related to the possible double use of the losses focusing on the fact that such risk was avoided in a pure domestic situation since the deduction at the level of the contributing company was compensated by the taxation of the corresponding amount of income at the level of the receiving company. In Kokott's own words:[1349]

> "[…] it should be held that a rule which generally provides that only intra-group transfers between Finnish companies are deductible for tax purposes is, in theory, apt to prevent losses from being used twice. This is because so far as purely internal transfers are concerned the Member States can ensure the transfers are subject to tax."

The rejection of this argument by the Court is only partially understandable because technically, group contribution systems do not involve losses. As argued by several governments in the case[1350] – and following the AG's reasoning – what is at stake it also the possibility of benefiting from a double advantage: the intra-group financial transfer is taken into account when determining the taxable income of the transferor but is not regarded as taxable income in the hands of the transferee giving rise to a situation of double non-taxation. The need to prevent a double use of losses is analogous to the need to prevent a double advantage and therefore, should have been taken into consideration by the Court.[1351]

Later in the *Amurta* case, the Court while implicitly recognizing that the *justification trio* was not always applicable, reaffirmed the use of combined justifications in the context of the balanced allocation of the powers to tax:[1352]

> "[…] the need to safeguard the balanced allocation between the Member States of the power to tax has been recognised together with other grounds based on the risks of tax avoidance or of double use of losses."

[1346] See ECJ 18 July 2007, C-231/05 *Oy AA*, para. 60.

[1347] See ECJ 18 July 2007, C-231/05 *Oy AA*, para. 57. Although the CJ rejected expressly the double use of losses as an accepted justification due to the reason stated above, it is interesting to note that in the subsequent judgment in CJ 3 February 2015, C-172/13, *European Commission v UK*, para. 24, the Court referred to *OyAA* as one of the cases in which three grounds of justification were accepted together.

[1348] See AG Kokott Opinion delivered on 12 September 2006, in case C-231/05, *Oy AA*, para. 48.

[1349] See AG Kokott Opinion delivered on 12 September 2006, in case C-231/05, *OyAA*, para. 59.

[1350] See ECJ 18 July 2007, C-231/05 *Oy AA*, para. 49.

[1351] See *infra* 17.5 for a detailed analysis on the application of the *Marks & Spencer* no possibilities test to other group taxation regimes.

[1352] See ECJ 8 November 2007, C-379/05 *Amurta SGPS v Inspecteur van de Belastingdienst/ Amsterdam*, para. 56.

Therefore and unsurprisingly, in *Lidl Belgium* the Court was confronted specifically with the question of the number of required justifications. One of the questions raised by the *Bundesfinanzhof* when referring the case to the CJ was precisely whether the three combined justifications accepted in *Marks & Spencer* where always cumulative. The CJ addressed this issue by stating that it is not always necessary that all these justifications are present in order for a certain measure to be justified if only two justifications[1353] - the need to preserve a balanced allocation of the powers to tax between Member States and to avoid the double use of losses[1354]- were sufficient. The CJ, however, did not provide the reason why it analysed only those two justifications and not the one based on the prevention of tax avoidance. The reason for the CJ not to consider prevention of tax avoidance as a possible justification ground may be explained by the difference between PEs and subsidiaries which makes tax avoidance less likely to occur in the case of foreign PEs. In the case of PEs it is not two different taxpayers who are involved, and there is no possibility of choice to shift losses from one company to another company of the group[1355] which is the inherent artificiality to the functioning of such benefit within group taxation regimes. The losses incurred by the PE ultimately belong to the head office of which the PE is part. Therefore, the risk of tax avoidance is, in principle, very limited[1356] since losses incurred by the PE are only taken into account at the level of the head office.[1357]

In *X Holding,* the CJ referred expressly to only one justification: the need to safeguard the balanced allocation of the powers to tax.[1358] Why the Court disregarded the other two

---

[1353] In para. 37, according to the Court:

> "Consequently, the two justifications put forward must each be considered as being capable of justifying a restriction on the freedom of establishment arising from the tax treatment by the Member State in which the seat of a company is located of losses incurred by a permanent establishment belonging to that company and situated in the other Member State."

The reference to *each* would give the impression that there was no need to combine both justifications. From the reading of this judgment in other languages, it is clear that the Court is making reference to both justifications. Differently (although in my view incorrectly) considering that the CJ used the balanced allocation of the power to tax on a stand-alone basis in *Lidl Belgium* see the "Opinion Statement of the CFE on the Decision of the European Court of Justice of 6 September 2012 in Philips Electronics (Case C-18/11) and Group Relief, *European Taxation* 7 IBFD (2013), p. 342.

[1354] See ECJ 15 May 2008, C-416/06 *Lidl Belgium GmbH & Co. KG v Finanzamt Heilbronn*, paras. 31-37.

[1355] Wolfgang Schön, "Losing Out at the Snooker Table: Cross-Border Loss Compensation for PE's and the Fundamental Freedoms", in L. Hinnekens, P. Hinnekens (eds.), *A Vision of Taxes within and outside the European Borders Festschrift in honor of Frans Vanistendael*, (2008), pp. 824-825.

[1356] The only possibilities for loss shifting is either the change of the corporate residence of the head office or the activities of the PE being carried by another company (which will then have a PE in the other State rather than the original head office). See on this, Jérôme Monsenego *Taxation of Foreign Business Income within the European Internal Market*, IBFD Doctoral Series no. 22 (2012), p. 420.

[1357] See Communication from the Commission to the Council, The European Parliament and the European Economic and Social Committee, "Tax Treatment of Losses in Cross-Border Situations", COM (2006) 824 final of 19 December 2006, p. 6.

[1358] CJ 25 February 2010, C-337/08 *X Holding BV v Staatssecretaris van Financiën*, paras. 29-33.

justifications based on the prevention of tax avoidance and the risk of double use of losses is unclear. Regarding this latter justification, the explanation may derive from the fact that:

- The question submitted to the CJ was of a general nature on whether the fiscal unity regime should be extended to foreign EU subsidiaries based on a breach to the freedom of establishment and, in any event, the facts of the case did not refer to losses. But that being the case, the reason why the CJ focused its reasoning on cross-border loss relief is not apparent;
- The losses were not final. Nevertheless, the Court should have made reference to the *Marks & Spencer* exception in similar terms as it did in *Lidl Belgium*.

As regards the justification based on the prevention of tax avoidance, while it is true that the Court makes no reference to that, the fact is that its reasoning is also based on the danger of abuse of loss trafficking[1359]. The Court referred that:[1360]

> "31. Since the parent company is at liberty to decide to form a tax entity with its subsidiary and, with equal liberty, to dissolve such an entity from one year to the next, the possibility of including a non-resident subsidiary in the single tax entity would be tantamount to granting the parent company the freedom to choose the tax scheme applicable to the losses of that subsidiary and the place where those losses are taken into account.
> 32. Since the dimensions of the tax entity can therefore be altered, acceptance of the possibility of including a non-resident subsidiary in such an entity would have the consequence of allowing the parent company to choose freely the Member State in which the losses of that subsidiary are to be taken into account (see, to that effect, *Oy AA,* paragraph 56, and *Lidl Belgium*, paragraph 34)."

This demonstrates that the CJ focused on the possible manipulation of the tax base that could be achieved by the degree of liberty granted to the taxpayer not only to enter into the fiscal unity regime but to shape the fiscal unity in the most favourable way on a yearly basis.[1361]

In the *A Oy* case the CJ had the opportunity to return to its *Marks & Spencer* reasoning by accepting the three justifications taken together.[1362] The judgment is not surprising since this case – similar to *Marks & Spencer* - dealt with a company in liquidation (due to a cross-border merger). Considering the ambiguity raised by its previous case law – certainly acknowledged by the CJ itself - it was only natural that the Court tried to build consistent case law in a situation materially identical to a previous decision. This was reiterated in the subsequent decision in *Commission v UK* where the Court, dealing with the implementation

[1359] See Dennis Weber, "Eight Points as to Why the X Holding Judgment is Incorrect" in Dennis Weber & Bruno da Silva, *From Marks & Spencer to X Holding: The Future of Cross-Border Group Taxation*, Kluwer Law International BV, The Netherlands (2011), p. 38.
[1360] See CJ 25 February 2010, case C-337/08, *X Holding BV v Staatssecretaris van Financiën*, paras. 31-32.
[1361] See Christiana HJI Panayi "Reverse Subsidiarity and EU Tax Law: Can Member States be Left to their Own Devices*? British Tax Review* 3 (2010), Sweet & Maxwell, p. 285.
[1362] See CJ 21 February 2013, C-123/11 *A Oy*, para. 46.

of the *Marks & Spencer* ruling in the UK, emphasized the triple combined justification standard.[1363]

The *second question* was what weight should be given in the future to each of the three combined justifications.[1364] Starting again by analysing *Marks & Spencer*, it seems that the solution found from the CJ focused much more on one of the accepted justifications: the dual use of losses. The need to take over foreign losses when locally the possibility of those losses has been exhausted is essentially a requirement addressed to such justification. And the outcome reveals that the balanced allocation of taxing powers was not, in any event, an absolute justification. In fact, if the concern were merely to avoid breaching the symmetry between taxation and deductions, then the no-possibilities test would not fit this purpose as it is by itself much more disruptive of the allocation of taxing powers of a Member State. In fact, taken independently, the objective of preserving the allocation of taxation powers would not be achieved at all. This conclusion is confirmed by the Opinion of AG Kokott in the *A Oy* case[1365] where it is stated:[1366]

> "If the justification of preservation of the allocation of taxation powers among the Member States is taken as a criterion, this gives an entirely different perspective for assessing the need for a national measure. With regard to that justification, <u>it is not a less restrictive measure if the Member State which does not have the right to tax has to take account of losses incurred under the taxing power of another Member State in a case where that possibility no longer exists there. In fact, in such a case, the objective of preserving the allocation of taxation powers is not achieved at all</u>." [Underscore BdS]

And later in *Commission v UK,*[1367] when recognizing the advantages of final losses within a group taxation context:

> "There is, however, a second, more significant advantage of group relief. Where, on balance across all the accounting periods for its activity, the subsidiary makes only a loss ("total loss"), group relief goes beyond being a mere cash flow advantage. In this case, on the basis of the loss relief, the parent company does not pay any tax on its income to the amount of the total loss incurred by its subsidiary, and this is definitive. The same situation exists where the subsidiary does not collapse economically, but its loss carry-forward is limited by law and, for that reason, losses incurred by it are not subject to tax relief."

[1363] See CJ 3 February 2015, C-172/13 *European Commission v UK*, para. 24.

[1364] See A. Cordewener, G. Kofler & S. van Thiel, "The Clash Between European Freedoms and National Direct Tax Law: Public Interest Defences available to Member States", *Common Market Law Review* 46 (2009), pp. 1990–1995 and M. Lang, "Recent Case Law of the ECJ in Direct Taxation: Trends, Tensions and Contradictions", *EC Tax Review* 3 (2009), pp. 106–108.

[1365] Opinion of AG Kokott delivered on 19 July 2012 in case C-123/11, *A Oy*, para. 51

[1366] Concurrently, the Opinion of AG Mengozzi delivered on 21 March 2013 in case C-322/11, *K*, para. 67, considering that the no possibilities test should not apply when the accepted justification is solely the need to preserve the balanced allocation of the powers to tax between Member States.

[1367] See Opinion of AG Kokott delivered on 23 October 2014, in case C-172/13 *European Commission v UK*, para. 21.

In fact, other possible alternatives, notably a recapture mechanism[1368] would be more appropriate, as a temporary loss transfer with subsequent recapture would allow the Member State that takes over the foreign losses not to give up its taxing jurisdiction over the profits of the company resident in such Member State. It would simply temporarily defer the collection until the foreign subsidiary (or PE) became profitable again.

The question was naturally whether the prevention of double use of losses could constitute an autonomous justification. In *Philips Electronics UK,* the CJ was precisely confronted with the issue[1369] of whether either the prevention of double use of losses (or the balanced allocation of the powers to tax) could constitute the sole basis for the restriction to the freedom of establishment. The position of the CJ was to reject that possibility and to consider that the double use of losses was only relevant when it affected the balanced allocation of taxing rights. The Court seemed to have endorsed the subordinate nature[1370] of the justification based on the prevention of the double use of losses towards the balanced allocation of the taxing rights. It considered that:[1371]

> " As regards, secondly, the objective of preventing the double use of losses, it must be observed that even if such ground, considered independently, could be relied on, it cannot in any event be relied on in circumstances such as those in the main proceedings to justify the legislation of the host Member State.
> […]
>
> In such circumstances, the risk that those losses may be used both in the host Member State where the permanent establishment is situated and also in the Member State where the non-resident company has its seat has no effect on the power of the Member State where the permanent establishment is situated to impose taxes.
> […]
>
> The host Member State, in whose territory the permanent establishment is situated, therefore cannot, in order to justify its legislation in a situation such as that in the main proceedings and in any event, plead as an independent justification the risk of the double use of losses."

From the first paragraph reproduced above, it appears that the Court is limiting its decision to "*circumstances such as those in the main proceedings*" involving "*legislation of the host Member State*".[1372] This was due to the fact that, even without the application of the UK

[1368] See *infra* 17.2, for a more in-depth analysis.
[1369] See CJ 6 September 2012, C-18/11 *The Commissioners for Her Majesty's Revenue & Customs v Philips Electronics UK Ltd*, para. 10.
[1370] See Joachim Englisch, "HMRC v Philips Electronics UK Ltd: another contribution to EU Law jurisprudence on loss relief", *British Tax Review* 5 (2012), p. 592.
[1371] See CJ 6 September 2012, C-18/11 *The Commissioners for Her Majesty's Revenue & Customs v Philips Electronics UK Ltd*, paras. 28, 30, 33.
[1372] This was properly referred to by AG Kokott who considered that the legislation at stake *would not, in any case, be capable of preventing the double use of losses*. See the Opinion of AG Kokott delivered on 19 April 2012 in case C-18/11 *The Commissioners for Her Majesty's Revenue & Customs v Philips Electronics UK Ltd*, paras. 65-66.

group relief, the losses would still be used in the Netherlands and also in the UK by virtue of the loss carry forward or carry back. Therefore, this could open the possibility for other cases where this justification could be accepted autonomously.

However in the following paragraphs the Court addresses the double use of losses as merely being secondary to the balanced allocation of taxing rights rejecting its independent application. The consequence of following this reasoning[1373] represents, as previously analysed, that double use of losses may never constitute an autonomous justification. This consequence was actually explicitly referred by *AG Kokott* in cases involving both Host[1374] and Home Member States[1375]and it holds irrespective of whether the prevention of unilateral or bilateral use of losses is at stake[1376]. In the case of unilateral use of losses, the Member State seeks to preclude the double use of loses in the context of its own tax system and the adoption of specific rules for that purpose constitute a justification based on the need to preserve the coherence of the tax system (see in this regard the *Papillon* case). In the case of bilateral use the double use of losses either does not constitute a justification at all (when the ban on the deduction relates to the legislation where those losses arose as it constitutes a different treatment between domestic and cross-border establishments, e.g. *Philips Electronics UK*) or it is, as referred to, secondary to the need to protect a balanced allocation of the powers to tax between Member States (when the ban of deduction refers to foreign losses, like for example in *Marks & Spencer*).

But it raises questions when considering other case law when the CJ, although not expressly, seems to have accepted the double use of losses as an autonomous justification. Particularly[1377] in *de Groot*, the CJ appears to accept that the Member State which primarily

---

[1373] See Joachim Englisch, "HMRC v Philips Electronics UK Ltd: another contribution to EU Law jurisprudence on loss relief", *British Tax Review* 5 (2012), p. 593.

[1374] See Opinions of AG Kokott delivered on 27 February 2014, in Joined cases C-39/13, C-40/13 and C-41/13, *Inspecteur van de Belastingdienst Noord/kantoor Groningen v SCA Group Holding BV (C-39/13), X AG, X1 Holding GmbH, X2 Holding GmbH, X3 Holding BV, D1 BV, D2 BV, D3 BV, v Inspecteur van de Belastingdienst Amsterdam (C-40/13) and Inspecteur van de Belastingdienst Holland- Noord/kantoor Zaandam v MSA International Holdings BV, MSA Nederland BV (C-41/13)*, para. 47; and delivered on 19 April 2012 in case C-18/11, *The Commissioners for Her Majesty's Revenue & Customs v Philips Electronics UK Ltd* paras. 58-59.

[1375] See Opinion of AG Kokott delivered on 19 July 2012 in case C-123/11, *A Oy*, para. 49.

[1376] See Opinion of AG Kokott delivered on 27 February 2014, in Joined cases C-39/13, C-40/13 and C-41/13, *Inspecteur van de Belastingdienst Noord/kantoor Groningen v SCA Group Holding BV (C-39/13), X AG, X1 Holding GmbH, X2 Holding GmbH, X3 Holding BV, D1 BV, D2 BV, D3 BV, v Inspecteur van de Belastingdienst Amsterdam (C-40/13) and Inspecteur van de Belastingdienst Holland- Noord/kantoor Zaandam v MSA International Holdings BV, MSA Nederland BV (C-41/13)*, para. 48.

[1377] J. Englisch, "HMRC v Philips Electronics UK Ltd: another contribution to EU Law jurisprudence on loss relief", *British Tax Review* 5 (2012), p. 592, footnote 33, also makes reference to para. 59 of the judgment in CJ 29 November 2011, C-371/10 *National Grid Indus BV v Inspecteur van de Belastingdienst Rijnmond/kantoor Rotterdam,* as another example in which the CJ appears to accept double use of losses as an autonomous justification. It is unclear in my view whether that is effectively the case as it is arguable that the Court used it combined with the justification based on the balanced allocation of taxing rights. Literally:

> "[…] The taking into account by the Member State of origin of either of an exchange rate gain or of an exchange rate loss occurring after the transfer of the place of effective management

should have taken the losses into account (in this case, the residence State) can be released from this obligation if those losses are already taken into account in another Member State.[1378] The explanation for this difference may rely on the different perspective that drove the CJ's analysis. In the *de Groot* case, the judgment was driven by the ability-to-pay principle which is clearly applicable to individuals but debatable whether it applies to companies.

Similarly, it was also already demonstrated[1379] that the broad concept of prevention of tax avoidance does not constitute a stand alone justification but rather serves the purpose of preserving the balanced allocation of the powers to tax between Member States. This reasoning can also be confirmed by the CJ's reasoning in the *SCA Group Holding* case when rejecting the justification of the Netherlands Government based on the risk of tax avoidance:[1380]

> "Moreover, although the Netherlands Government sought to justify the restriction at issue in the main proceedings on the ground of the risk of tax avoidance, it is settled case-law that that ground does not constitute, by itself, an autonomous justification for a tax restriction on freedom of establishment if it is not relied on in conjunction with a specific objective of combating wholly artificial arrangements which do not reflect economic reality and the purpose of which is to escape the tax normally due […]" [underscore BdS]

Therefore the issue was then to determine the weight to be given to the balanced allocation of the powers to tax. The fundamental question arose after the CJ judgment in the *X Holding* case due to the express reference to this single justification. In that regard, there were all sorts of arguments in the sense that the Court was overruling its previous case law. Wattel considered that by limiting itself to a justification based on the balanced allocation of powers to tax, the CJ was actually concluding that subject and non-subject to tax were different situations and therefore there was no discriminatory treatment from the outset by treating domestic and cross-border situations involving groups of companies differently because obviously the situations were not comparable.[1381] As previously analysed, I share the view expressed by Wattel that this is conceptually the correct approach to this (and other) case law. These situations dealt by the CJ constitute mere disparities[1382] and do not

---

could not only call into question the balanced allocation of powers of taxation between the Member States but also lead to double taxation or double deduction of losses […]."

[1378] ECJ 12 December 2002, C-385/00 *F.W.L. de Groot v Staatssecretaris van Financien*, para. 100.

[1379] See *supra* 16.2.5.

[1380] CJ 12 June 2014, Joined cases C-39/13, C-40/13 and C-41/13, *Inspecteur van de Belastingdienst Noord/kantoor Groningen v SCA Group Holding BV (C-39/13), X AG, X1 Holding GmbH, X2 Holding GmbH, X3 Holding BV, D1 BV, D2 BV, D3 BV, v Inspecteur van de Belastingdienst Amsterdam (C-40/13) and Inspecteur van de Belastingdienst Holland- Noord/kantoor Zaandam v MSA International Holdings BV, MSA Nederland BV (C-41/13)*, para. 42

[1381] See second Opinion of AG Wattel delivered on 7 July 2010 in Hoge Raad no. 43484 bis, case *X Holding BV v Staatssecretaris van Financiën*.

[1382] See Dennis Weber, "In search of a (new) equilibrium between tax sovereignty and the freedom of movement within the EC" 34 *Intertax* 12 (2006) p. 588.

fall within the scope of the fundamental freedoms. Nevertheless, I disagree that this was the interpretation of the CJ judgment in this case. As already analysed, the meaning assigned by the Court to the balanced allocation of the powers to tax is not based on the difference between subject and not-subject to tax. On the contrary, as stated by Weber,[1383] the CJ has systematically rejected[1384] that the preservation of the balanced allocation of the powers to tax could constitute a justification merely because the foreign company was not subject to tax.

In turn, AG Kokott considered that, particularly after *X Holding,* the balanced allocation of the powers to tax had been raised to an autonomous justification[1385] which, as a consequence, would mean that such justification would have a different standard in assessing the need for a national measure. This outcome, combined with the fact that the double use of losses would not constitute an independent justification meant that the *Marks & Spencer* exception could no longer be applied, reason by which the CJ in *X Holding* judgment made no reference to it.[1386] As a first remark to this reasoning, it appears that AG Kokott ignores the role given by the CJ to this justification. The need to safeguard the balanced allocation constitutes a fundamental basis on which Member States' claims for justification are judged. This justification is central to the Court's analysis because its broader scope allows weighing and balancing between the claims of Member States and the Internal Market requirements. Such analysis is performed under the proportionality test, reason by which the Court established the no-possibilities test in *Marks & Spencer* and considered that this justification is not absolute.[1387] Actually, Kokott's reasoning is flawed if one understands the *Marks & Spencer* exception as a development of the always somewhere approach with its origin back to the *Schumacker* case. Understood in these terms, it actually becomes clear that the possible double use of losses is irrelevant in order for such exception to apply. The CJ wants to ensure that losses are deducted at least once, but not more than once, and that it is an objective of the Internal Market that prevails over the Member States' claims.

In addition, there is no shift in the standard of the balanced allocation of the powers to tax, as argued by AG Kokott. While it is recognized that the CJ reasoning in *X Holding* is unclear, and should be more structured and carefully written, it does not, in my view, represent a change in the Court's approach. As previously described, while the CJ

[1383] See Dennis Weber, "Eight Points as to Why the X Holding Judgment is Incorrect" in D. Weber & B. da Silva (eds.), *From Marks & Spencer to X Holding: The Future of Cross-Border Group Taxation*, Kluwer Law International BV, The Netherlands (2011), p. 38.
[1384] See, *inter alia*, cases ECJ 29 March 2007, C-347/04 *Rewe Zentralfinanz eG v Finanzamt Köln-Mitte*, para. 43; and ECJ 18 July 2007, C-231/05 *Oy AA*, para. 53.
[1385] See Opinion of AG Kokott delivered on 19 July 2012 in case C-123/11, *A Oy*, paras. 49-51.
[1386] See Opinion of AG Kokott delivered on 19 July 2012 in case C-123/11, *A Oy*, paras. 52-53.
[1387] See Joachim Englisch, "HMRC v Philips Electronics UK Ltd: another contribution to EU Law jurisprudence on loss relief", *British Tax Review* 5 (2012), p. 594, footnote 45.

expressly used only one justification[1388] clearly another one emerges from its reasoning based on the prevention of tax avoidance being associated with the manipulation of the perimeter of the fiscal unity and the consequent loss trafficking. This derives from the statement of the CJ when it holds that:[1389]

> " 31. Since the parent company is at liberty to decide to form a tax entity with its subsidiary and, with equal liberty, to dissolve such an entity from one year to the next, the possibility of including a non-resident subsidiary in the single tax entity would be tantamount to granting the parent company the freedom to choose the tax scheme applicable to the losses of that subsidiary and the place where those losses are taken into account.
> 32. Since the dimensions of the tax entity can therefore be altered, acceptance of the possibility of including a non-resident subsidiary in such an entity would have the consequence of allowing the parent company to choose freely the Member State in which the losses of that subsidiary are to be taken into account."

And was reinforced in the *A Oy* case[1390] when the CJ intended to draw the line between this case and *X Holding*:

> "[…] it must be observed, first, that granting the parent company the possibility of taking into account the losses of its non-resident subsidiary in connection with a cross-border merger is not a priori such as to allow the parent company to choose freely from one year to the next the tax scheme applicable to its subsidiaries" losses (see, a contrario, *X Holding*, paragraph 31)."

The exclusive reference to just one justification is no different from Kokott's own words[1391] in the *National Grid Indus* case where it is admitted that the prevention of tax avoidance may be implied in the arguments based on the justification of the balanced allocation of the powers to tax:

> "[…] In so far as the final settlement tax is nevertheless intended to serve to prevent tax avoidance, without however aiming specifically at purely artificial arrangements, sufficient account is taken of that aspect in relation to the ground of justification of the balanced allocation of powers of taxation."

As referred to, the judgment of the CJ in *A Oy* supports this reasoning and clarifies that there was no change in the Court's approach. As referred by AG Mengozzi in his Opinion in the *K* case[1392]:

> […] the revival in such an explicit way of the Marks & Spencer exception was certainly not fortuitous. [translation BdS]

[1388] Even if balanced allocation of the powers to tax had been used independently, that would not represent a change in the CJ approach. Aside from the arguments developed, it is interesting to consider that already in the *N* case such justification was used autonomously whereas later in *Lidl Belgium,* the Court still invoked the *Marks & Spencer* exception.
[1389] CJ 25 February 2010, *X Holding BV v Staatssecretaris van Financiën,* paras. 31-32.
[1390] CJ 21 February 2013, C-123/11 *A Oy*, para. 48.
[1391] See Opinion of AG Kokott delivered on 8 September 2011 in case C-371/10 *National Grid Indus BV v Inspecteur van de Belastingdienst Rijnmond/kantoor Rotterdam*, para. 105.
[1392] See AG Mengozzi Opinion delivered on 21 March 2013, in case C-322/11 *K*, para. 71

Overall, the common theme throughout the CJ case law is the justification based on preventing the undermining of a balanced allocation of the powers to impose taxes between Member States. Frequently within the CJ case law, the scope of the balanced allocation of the powers to tax appears be defined by reference to one of the other two grounds,[1393] namely the prevention of the use of losses twice of tax avoidance. It already follows from the analysis performed regarding the (specific) meaning of double use of losses and prevention of tax avoidance that these two justifications are a mere sub-category which materialize in situations which jeopardize the balanced allocation of the powers to tax.[1394] In other words, they represent situations which interfere with the balanced allocation of the powers to tax in that sense. Therefore, they do not constitute stand alone justifications, whereas differently, the balanced allocation may constitute an autonomous justification. From the fact that neither the double use of losses nor the prevention of tax avoidance constitute autonomous justifications, it could also be inferred that these two justifications would not pass the proportionality test. The justification based on the double use of losses would go beyond what was necessary, since the existence of the Mutual Assistance Directive[1395] would allow to determine whether the losses had already been used in another Member State. In case of the risk of tax avoidance it could also be argued that as independent justification it would go beyond the test applied by the Court of a provision aimed at tackling wholly artificial arrangements.

I In any event, the case law of the CJ confirms that the other two justifications are always taken in conjunction with the balanced allocation of the powers to tax, but that this latter justification can be used independently.

It is acknowledged that AG Maduro, in his Opinion in the *Rewe Zentralfinanz* case, observed that:[1396]

> " It must also be shown that such a risk exists. That is why the Court held, in the same judgment, that the justification based on the preservation of the allocation of the power to impose taxes between Member States cannot be separated from two other justifications relating, first, to the risk of losses being taken into account twice and, secondly, to the risk of tax avoidance. It is only in the light of these three justifications, "taken together", that the Court held that the restrictive provisions at issue could be justified."

But this does not change the previous conclusions as to the scope and value of the balanced allocation of the powers to tax. In my view, AG Maduro is *not* saying that all three justifications have to be present in order for the balanced allocation of the powers to tax to be accepted. Differently, I interpret the words of AG Maduro as: (i) reinstating that in

---

[1393] See, *inter alia*, ECJ 4 December 2008, C-330/07 *Jobra Vermögensverwaltungs-Gesellschaft mbH v Finanzamt Amstettem Lelk Scheibbs*, para. 32.

[1394] Concurrently, see Werner C. Haslehner, "Cross-Border Loss Relief for Permanent Establishments under EC Law", 64 *Bulletin for International Taxation* 1 (2010), p. 34 and Domenico Pezzela, "Final Losses under EU Tax Law: Proposal for a Better Approach", 54 *European Taxation* 2/3, (IBFD on-line 2015).

[1395] Council Directive 2011/16/EU of 15 February 2011 on administrative cooperation in the field of taxation.

[1396] See Opinion of AG Maduro delivered on 31 May 2006 in case C-347/04 *Rewe Zentralfinanz eG v Finanzamt Köln-Mitte*, para. 34.

Marks & Spencer three justifications were indeed accepted, and (ii) the balanced allocation of the powers to tax cannot be used as a justification merely because foreign subsidiaries are not subject to tax (following the arguments in paras 30-32 of his Opinion) but it has to be demonstrated – *be shown that such risk exists* – that the powers of a Member State to tax the economic activity generated within its jurisdiction may be jeopardized. In other words, the balanced allocation of the powers to tax constitutes an autonomous justification, accepted when evidence is demonstrated that there is a risk that it may be jeopardized. Such evidence is frequently demonstrated (but not exclusively) based on the risk of either double use of losses or tax avoidance and ultimately relates to the risk that Member States have to surrender their legitimate power to impose tax within national borders.

In this sense (and differently from the Opinion in *A Oy*), I agree with the Opinion of AG Kokott delivered in the *Philips Electronics* case when stating that:[1397]

> "40. The nature of the question stems from the uncertainty which clearly still exists over the interpretation of the judgment in *Marks & Spencer*. In that case, the Court had cited as justifications the preservation of the balanced allocation of the power to impose taxes between Member States, the danger that losses might be taken into account twice and the risk of tax avoidance and applied all three together to justify a restriction of the freedom of establishment.
>
> 41. In my Opinion in *Oy AA*, I stated that preserving the allocation of the power to impose taxes is at the heart of these three elements. In the judgment in that case, the Court accordingly recognised that a justification is possible through the two elements of safeguarding the allocation of the power to tax between the Member States and the need to prevent tax avoidance. Subsequently, in *Lidl Belgium* it also accepted a justification solely on the basis of the allocation of the power to tax between the Member States and the danger that the same losses will be taken into account twice.
>
> 42. Therefore it is clear that the crucial factor for the justification is ultimately that national legislation pursues the objective of preserving the allocation of the power to tax. Against this background, the objectives of preventing the double use of losses and tax avoidance do not constitute an end in themselves, but are relevant only in so far as they serve to preserve the allocation of the power to tax between the Member States. Accordingly, the Court examined and accepted this justification, most recently in *National Grid Indus*, simply in itself, i.e. without recourse to the aspects of preventing the double use of losses or tax avoidance."

In fact, that both three justifications do not have to be present could be derived from the word *or* used by AG Maduro in the following paragraph which by itself suggests alternative justifications:[1398]

[1397] See Opinion of AG Kokott delivered on 19 April 2012, in case C-18/11 *The Commissioners for Her Majesty's Revenue & Customs v Philips Electronics UK Ltd*, paras. 40-42.

[1398] See Opinion of AG Maduro delivered on 31 May 2006 in case C-347/04 *Rewe Zentralfinanz eG v Finanzamt Köln-Mitte,* para. 34.

> "35. It must therefore be determined whether, as the German Government contends, there is a risk of losses being taken into account twice or a risk of tax avoidance in the present case. [Underscore BdS]"

In particular, the CJ case law on exit tax cases[1399] demonstrates that the balanced allocation of the powers to tax is indeed an independent justification.[1400] The risk at stake is that a Member State has to abandon its right to tax a capital gain that arose within the ambit of its powers to tax before the transfer, possibly, in favour of other Member State.

16.4 Interim conclusions

Direct tax measures that restrict the exercise of the fundamental freedoms are capable of being justified by overriding reasons in the public interest. In direct tax cases, the commonly accepted justifications are the effectiveness of fiscal supervision, the need to safeguard fiscal cohesion, the principle of territoriality, the prevention of abuse, the balanced allocation of the powers to tax and the need to prevent that losses may be taken into account twice.

Throughout the nearly 30 years of direct taxation case law, the use of these justifications has led to numerous questions as to their exact meaning, scope and possible overlaps between them. This is particularly apparent as regards group taxation. It was in the group taxation case law that the Court used for the first time the justification based on the need to preserve the balanced allocation of the powers to tax. Also an innovative approach in this cluster of cases was the fact that the Court started pairing justifications together without much explanation raising the question as to an autonomous value of each justification and its precise scope of application.

The principle of territoriality is a commonly invoked justification for a breach of the fundamental freedoms by Member States. This justification is used by the Court based on its international law meaning and not based on its tax law meaning in the sense of delimitation of tax jurisdiction.

The justification based on the need to preserve the coherence of the tax system has been accepted when there is a direct link between a particular tax advantage and an offsetting tax levy. The existence of such direct link may arise if the tax advantage and levy are imposed

---

[1399] See ECJ 7 September 2006, C-470/04, *N v Inspecteur van de Belastingdienst Oost/kantoor Almelo*, para. 42; and CJ 29 November 2011, C-371/10 *National Grid Indus BV v Inspecteur van de Belastingdienst Rijnmond/kantoor Rotterdam*, paras. 45-49.

[1400] See Suzanne Kingston, "A Light in the Darkness: Recent Developments in the ECJ's Direct Tax Jurisprudence", 44 *Common Market Law Review*, Kluwer Law International (2007), p. 1353. Kingston refers to the fact that if the balanced allocation of the powers to tax would only accepted as a justification in conjunction with other factors then its function would be rather unclear as it would end up being relegated to a subset of the general justification on grounds of abuse (with a higher yardstick for proving at least two justifications).

on the same taxpayer in relation to the same tax. It represents the acknowledgment by the Court that a Member State may apply a restrictive measure if it is systematically linked to a subsequent measure that neutralizes its restrictive effect. In that sense, it applies within the framework of a national tax system. The relevance of coherence as a rule that aims at safeguarding the internal coherence of the tax system is apparent in group taxation cases that deal with a domestic perimeter of group companies which have a foreign link (for example, grouping domestic companies held by a foreign parent/intermediary holding). In these cases, it is apparent that there is only one jurisdiction involved, by contrast to other case law where the Court invoked the balanced allocation of the powers to tax involving cross-border loss relief, that is, a shift of income between different Member States.

The Court has on several occasions recognised that, in principle, Member States may be justified in taking otherwise discriminatory tax measures in order to prevent abuse of law. The Court has held, in principle, that this justification is permissible only when the rule was targeted enough to affect only wholly artificial arrangements. The fundamental issue as regards the interpretation of this justification in the field of group taxation derives from the fact that the Court appears to have given a broader meaning to this justification.

A first explanation may derive from the inherent artificiality involving group taxation regimes. The transfers of income between companies of the group rely essentially on accountancy adjustments without underlying transactions.

A second explanation relies on the fact that the prevention of tax avoidance in this context has been tied with the balanced allocation of the powers to tax. In other words, the broader meaning given by the Court to the prevention of tax avoidance is explained by the fact that this meaning was accepted when its application was combined with the need to prevent jeopardizing the balanced allocation of the powers to tax.

Another of the accepted justifications is the prevention of double use of losses. By accepting this justification, the CJ wants to prevent the concurrent use of benefits in two different tax jurisdictions.

The preservation of the balanced allocation of the taxing rights between Member States is one of the most recent justifications recognized by the CJ which still has not impeded it from turning it into the one which is most frequently argued. Initially, the CJ accepted this justification in combination with other justifications. The Court referred to the relevance of this justification to ensure the power of Member States to tax the activities carried out in their territory. This justification has been successfully invoked within the context of group taxation when there are possible cross-border flows of income (positive or negative) involved. In this regard, the CJ uses this justification to uphold applying to the economic activities of a company only the tax rules of the respective Member State of residence in respect of both profits and losses.

The issues subject to more controversy as from the moment that the Court accepted this (new) overriding reason in the public interest concerned the combined effect of the justifications used together raising the doubt of whether and which justification could serve as a stand-alone justification for a restrictive measure and, if so, what was its precise scope of application. Again the case law on group taxation is crucial considering that the triple use of justifications was used for the first time when assessing the compatibility of a tax group regime with the fundamental freedoms. In addition, doubts arose as to the exact scope and differences between the above justifications.

Although there is a relation between the justifications based on the principle of territoriality, coherence of the tax system and balanced allocation of the powers to tax, they do not have the exact same meaning. The justification based on the balanced allocation of the powers to tax complements the other justifications as it addresses specifically the situations arising from the possible interaction of two tax systems of two different Member States.

As regards the mere prevention of abuse with the broad criterion followed by the Court, it appears to serves the purpose of preserving the balanced allocation of the powers to tax. The prevention of tax avoidance constitutes, therefore, a manifestation or a sub-category of the justification of the balanced allocation of the powers to tax between Member States in the sense that it represents a risk that jeopardizes the balanced allocation of taxing rights.

The double use of losses is also a sub-category or a manifestation of the balanced allocation of the powers to tax and not an autonomous justification. The CJ case law demonstrates that the double use of losses is only accepted as a justification when there is a transfer of one loss from one jurisdiction to the other jurisdiction, therefore, affecting the balanced allocation of the powers to tax between Member States. Again this was apparent from the CJ case law dealing with the definition of a domestic perimeter of group companies with a foreign link where the CJ affirmed the secondary role of the double use of losses.

Chapter 17

The proportionality test

17.1 Introduction

A national measure restricting the fundamental freedoms needs to comply with the general principles of EU law in order to benefit from the TFEU's explicit exceptions or otherwise the case law based on overriding reasons in the public interest. In this context, the most important principle is proportionality. Using this principle, the CJ balances in each concrete situation the benefits pursued by a Member State with its legislation against the harm suffered by the fundamental freedom.[1401] Although the CJ does not always use all these elements or clearly differentiate them, the proportionally test typically comprises: suitability, necessity and proportionality *stricto sensu*. The *suitability* test essentially asks whether the measure at stake is, in practice, capable of achieving its purported aim. A measure is considered to be *necessary* if there are no other equally effective but less restrictive means of achieving the objective. Conversely, the necessity test is not met in the case there are less restrictive measures that would allow achieving the same aim. Therefore, for a rule to be proportional, it should not be possible to have realised its result less restrictively. This assessment is made by comparing the rule claimed to be proportionate with either a hypothetical less restrictive rule[1402] or with a less existing restrictive rule of another Member State.[1403]
Finally, the proportionality *stricto sensu* involves asking whether the benefits of the measure outweigh the hindrance to trade. It is a cost-benefit assessment or a balance test[1404] where the CJ analyses whether the measure is disproportionate to the objective pursued. Overall, the proportionality test requires that the fundamental freedoms are infringed as little as possible in attaining that other Treaty-compatible aim.[1405]

17.2 (Ir)relevance of Cash Flow Disadvantages

One of the major issues arising from *Marks & Spencer* is the fact that apparently the CJ disregarded the financial burden arising from the impossibility to immediately deduct cross-

[1401] See Takis Tridimas, *The General Principles of EU Law*, Oxford EC Law Library 2nd edition, pp. 209-211 or Jukka Snell "Who's Got the Power? Free Movement and Allocation of Competences in EC Law" *Yearbook of European Law* (2003), pp. 337-338.
[1402] ECJ 4 March 2004, C-334/02 *Commission v French Republic* para. 30.
[1403] ECJ 15 July 2004, C-315/02 *Anneliese Lenz v Finanzlanddesdirektion fur tirol*, paras. 47-48.
[1404] See Miguel Poiares Maduro, *We, the Court – The European Court of Justice & the European Economic Constitution*, Hart Publishing 2002, pp. 49-52.
[1405] See Julian Ghosh, "Cadbury-Schweppes: Breach, Abuse, Justification and Why They are Different", in Rita de La Feria and Stefan Vogenauer (eds.) *Prohibition of Abuse of Law: A New General Principle of EU Law*, Studies of the Oxford Institute of European and Comparative Law (2011), p. 739.

border losses, only requiring the State of the parent company to take over those losses whenever they could no longer be used locally.
The Court has thus accepted a relevant time difference between domestic and cross-border loss relief since in a pure domestic situation, it is possible to immediately offset losses of a group member against a profitable group member. It is hardly arguable that the possibility of carrying forward losses in the State where those losses are incurred is an acceptable substitute for granting relief in the State of residence of the (parent) company. Even where a loss which is carried forward is subsequently set off, the company will in the meantime, by definition, have suffered a cash-flow disadvantage.

In that regard, the possibility to adopt an alternative mechanism such as the recapture rule should be considered as it allows a company to deduct a loss incurred in another Member State (either by another company or by a PE) subject to the deduction being brought back into account in subsequent years in which the foreign entity makes a profit. However, in *Marks & Spencer,*[1406] the CJ considered that:

> " […] in so far as it may be possible to identify other, less restrictive measures, such measures in any event require harmonisation rules adopted by the Community legislature."

A possible reason for the Court not to properly address the question whether the cash-flow disadvantage of having to carry losses forward instead of using them immediately was not an overly restrictive way of attaining the objectives sought could be based on the facts of *Marks & Spencer.*[1407] It should be kept in mind that *Marks & Spencer* concerned losses made by subsidiaries which had been wound up or sold. Accordingly, there was no possibility of recapturing in the future any loss relief given.
The Court was confronted with this issue in the *Lidl Belgium* case[1408] which, differently from the *Marks & Spencer* factual background, dealt with an on-going PE.[1409]
As referred to, the conclusion of the Court on the analysis of the proportionality of the German restrictive measures that denied the possibility of taking into account the foreign PE losses at the level of the head office was made by reference to the *Marks & Spencer case*. Accordingly, the measures were not proportional only in the case it was impossible to deduct final losses.[1410] In the case *Lidl Belgium,* those conditions were not verified since it had been possible to carry forward those losses locally at the level of the PE.[1411]

[1406] See ECJ 13 December 2005, C-446/03 *Marks & Spencer plc v David Halsey (Her Majesty's Inspector of Taxes)*, para. 58.
[1407] See in this regard, the Opinion of AG Sharpston delivered on 14 February 2008, in case C-416/06 *Lidl Belgium GmbH & Co. KG v Finanzamt Heilbronn*, para. 27.
[1408] See ECJ 15 May 2008, C-416/06 *Lidl Belgium GmbH & Co. KG v Finanzamt Heilbronn*.
[1409] See Christian Wimpissinger, "Cross-border transfer of losses, the ECJ does not agree with Advocate General Sharpston", 17 *EC Tax Review* 4, pp. 173-181.
[1410] See ECJ 15 May 2008, C-416/06 *Lidl Belgium GmbH & Co. KG v Finanzamt Heilbronn*, para. 48.
[1411] See ECJ 15 May 2008, C-416/06 *Lidl Belgium GmbH & Co. KG v Finanzamt Heilbronn*, paras. 50-51.

It is interesting to note, however, that in her Opinion, AG Sharpston held a different view. She considered – by making reference to the recapture mechanism which had previously been in force in Germany for more than thirty years – that:[1412]

> "23. It is, moreover, clear that less restrictive measures are possible. It is common ground that, prior to 1999, German legislation expressly provided that a company could deduct a loss made by a permanent establishment in another Member State to the extent to which it exceeded profits made by the permanent establishment and subject to the deduction being brought back into account in subsequent years in which the permanent establishment made a profit.
>
> 24. Such a rule, which allowed the deduction of losses while providing for the recapture of the loss relief in future profitable periods, would manifestly be a less restrictive means of avoiding the risk that losses might be used twice than a rule altogether excluding relief for such losses. Although a deduction-and-recapture rule involves a loss of symmetry and hence does not wholly attain the objective of the balanced allocation of the power to tax, that asymmetry is merely temporary where the permanent establishment subsequently becomes profitable. Moreover provision could be made for automatic reincorporation of amounts previously deducted if reincorporation had still not occurred after, for example, five years, or if the permanent establishment ceased to exist in that form.
>
> 25. Such a deduction-and-recapture rule is unarguably less restrictive of the taxpayer's fundamental right of establishment than an outright prohibition of deducting from the profits of a company losses made by a permanent establishment in another Member State. At the same time it is still appropriate for attaining the objectives of preserving the balanced allocation of the power to impose taxes and of avoiding the danger that losses would be used twice. To my mind, it thus manifestly better reflects the need for proportionality than the solution adopted by the Court in Marks & Spencer."

AG Sharpston somehow considered that the proportionality of a measure could not be made dependent on the treatment in the Host State by referring that:[1413]

> "It cannot be argued that the possibility of carrying forward losses in the State of the permanent establishment is an acceptable substitute for granting relief in the State of residence of the company. Even where a loss which is carried forward is subsequently offset, the company will in the mean time by definition have suffered a cash-flow disadvantage."

And in an attempt to reconcile both *Marks & Spencer* and *Lidl Belgium,* AG Sharpston pointed out[1414] what could be a plausible reason for the CJ not addressing the question whether the cash-flow disadvantages of having to carry forward losses instead of using them immediately was not an overly restrictive way of attaining the objectives sought in the

---

[1412] See Opinion of AG Sharpston delivered on 14 February 2008 in case C-416/06 *Lidl Belgium GmbH & Co. KG v Finanzamt Heilbronn*, paras. 24-25.

[1413] See Opinion of AG Sharpston delivered on 14 February 2008, in case C-416/06 *Lidl Belgium GmbH & Co. KG v Finanzamt Heilbronn*, para. 28.

[1414] See Opinion of AG Sharpston AG Sharpston delivered on 14 February 2008, in case C-416/06 *Lidl Belgium GmbH & Co. KG v Finanzamt Heilbronn*, para. 27.

UK case. As stated, *Marks & Spencer* concerned losses made by subsidiaries that had been wound up or sold where there was in principle no possibility of recapturing in the future for any loss relief given. Differently was the case in *Lidl Belgium* which concerned to an on-going PE.

Some doubts are raised as to the reasons why the CJ was silent[1415] and apparently disregarded the relevance of the cash-flow disadvantages arising from the impossibility to immediately offset losses with profits and therefore, did not consider an alternative mechanism, in particular, as concerns *Lidl Belgium*. Cash-flow effects are indeed of importance in assessing the proportionality of a national provision[1416] and therefore, it is hardly conceivable that the CJ would be considering that cash-flow was no longer relevant as that would be a rejection of its earlier case-law.[1417] In fact, in the *SCA Holding* case, the Court had the opportunity to refer to the relevance of cash-flow disadvantages in the specific context of tax groups[1418] when referring to its main advantage:[1419]

> "The possibility granted by Netherlands law to resident parent companies and their resident subsidiaries to be taxed as if they formed one and the same tax entity, that is to say, to be subject to a tax integration scheme, constitutes a cash-flow advantage for the companies concerned. That scheme allows, in particular, the profits and losses of the companies constituting the tax entity to be consolidated at the level of the parent company and the transactions carried out within the group to remain neutral for tax purposes […]."

[1415] Differently, see Werner Haslehner, "Consistency" and Fundamental Freedoms: The Case of Direct Taxation, *Common Market Law Review* 50, p. 761 who considers that the CJ was likely correct in not dealing with this argument at all. According to Haslehner, the fact that Germany had initially allowed a deduction of foreign losses and had been satisfied with a recapture mechanism to account for the use of such losses in another jurisdiction, but considered it necessary to changes this approach, may speak if favour of accepting the new mechanism to be the least restrictive to achieve the legitimate objective of maintaining the balanced allocation of the powers to tax.

[1416] See Opinion of AG Sharpston delivered on 14 February 2008, in case C-416/06 *Lidl Belgium GmbH & Co. KG v Finanzamt Heilbronn*, para. 29; or Opinion of AG Kokott delivered on 18 September 2008, in case C-282/07 *État belge - SPF Finances v Truck Center SA*, para. 48.

[1417] See *inter alia*, cases ECJ 8 March 2001, Joined Cases C-397/98 and C-410/98 *Metallgesellschaft Ltd. v. The Commissioners of Inland Revenue and Hoechst v. Inland Revenue Commissioners*, paras. 44, 54 and 76; ECJ 21 November 2002, C-436/00 *X and Y v. Riksskatteverket*, paras. 36-38, ECJ 8 June 2004, C-268/03 *De Baeck v Belgium,* para. 24. In subsequent case law the Court repeated that the exclusion of cash-flow disadvantages in cross-border situations where they are available in purely domestic situations constitutes a restriction to the fundamental freedoms. See cases ECJ 29 March 2007, C-347/04 *Rewe Zentralfinanz*, para. 29; or CJ 11 September 2014, C-47/12 *Kronos International Inc. v Finanzamt Leverkusen*, para. 80.

[1418] Also outside group taxation case law the CJ reaffirmed the relevance of cash-flow disadvantages. See CJ, 17 September 2015, C-589/13 *F.E. Familienprivatstiftung Eisenstadt v Unabhängiger Finanzsenat, Außenstelle Wien*, paras. 51-52.

[1419] See CJ 12 June 2014, Joined cases C-39/13, C-40/13 and C-41/13 *Inspecteur van de Belastingdienst Noord/kantoor Groningen v SCA Group Holding BV (C-39/13), X AG, X1 Holding GmbH, X2 Holding GmbH, X3 Holding BV, D1 BV, D2 BV, D3 BV, v Inspecteur van de Belastingdienst Amsterdam (C-40/13) and Inspecteur van de Belastingdienst Holland- Noord/kantoor Zaandam v MSA International Holdings BV, MSA Nederland BV (C-41/13)*, para. 21.

And that was further stressed in *Commission v UK* with:[1420]

> "Group relief under the CTA 2010 constitutes a tax advantage for the companies concerned. By speeding up the relief of the losses of loss-making companies by allowing them to be set off immediately against the profits of other group companies, that system confers a cash-flow advantage on the group."

Concluding, consequently, that[1421] the absence of such possibility to the situations at stake constituted precisely the disadvantage that amounted to a restriction the freedom of establishment:

> 47. The legislation at issue in the main proceedings therefore creates a difference in treatment between, on the one hand, parent companies the seat of which is in the Netherlands, which thanks to the single tax entity regime may, inter alia, in order to determine their taxable profit, immediately set off the losses of their loss-making subsidiaries against the profits of their profit-making subsidiaries, and, on the other hand, parent companies which also own subsidiaries in the Netherlands but have their seat in another Member State and are without a permanent establishment in the Netherlands, which are excluded from benefitting from the tax entity and, therefore, from the cash-flow advantage which the tax entity bestows.
>
> 48. Inasmuch as, from a taxation perspective, they put Community situations at a disadvantage compared with purely domestic situations, the provisions of the Law on corporation tax of 1969 at issue in the main proceedings thus constitute a restriction which is, in principle, prohibited by the provisions of the Treaty relating to freedom of establishment."

In all events, in *Lidl Belgium* the Court limited itself (probably for reasons of consistency) to a reference to the previous *Marks & Spencer* reasoning.
The explanation for this might be found in the mischaracterisation[1422] that the CJ made about the nature of the PE and which seemed to have influenced its judgment. In this regard, it treated the PE as a separate legal entity by making reference to an *autonomous entity*[1423] or *autonomous fiscal entity.*[1424] The fact is that as a general principle in international tax law, a PE is not considered a separate fiscal entity but rather as a part of a

---

[1420] See CJ 3 February 2015, C-172/13 *European Commission v UK*, para. 21. Similarly, CJ 1 April 2014, C-80/12 *Felixstowe Dock and Railway Company Ltd and others v The Commissioners for Her Majesty's Revenue & Customs,* para. 19.

[1421] See CJ 12 June 2014, Joined cases C-39/13, C-40/13 and C-41/13, *Inspecteur van de Belastingdienst Noord/kantoor Groningen v SCA Group Holding BV (C-39/13), X AG, X1 Holding GmbH, X2 Holding GmbH, X3 Holding BV, D1 BV, D2 BV, D3 BV, v Inspecteur van de Belastingdienst Amsterdam (C-40/13) and Inspecteur van de Belastingdienst Holland- Noord/kantoor Zaandam v MSA International Holdings BV, MSA Nederland BV (C-41/13)*, paras. 47-48. Similarly, CJ 3 February 2105, C-172/13 *European Commission v UK*, para. 22; or CJ 1 April 2014, C-80/12 *Felixstowe Dock and Railway Company Ltd and others v The Commissioners for Her Majesty's Revenue & Customs,* paras. 20-21.

[1422] See P.J. Wattel, Driedubbele noot bij HvJ EG 28 Februari 2008, zaak C-293/06, Deutsche Shell, HvJ EG 15 mei 2008, zaak C-414/06, Lidl Belgium, en HvJ EG 23 oktober 2008, zaak C-157/07, Krankenheim Ruhesitz am Wannsee, *BNB 2009/84 – 86*, pp. 1435-1444.

[1423] See ECJ 15 May 2008, C-416/06 *Lidl Belgium GmbH & Co. KG v Finanzamt Heilbronn*, para. 21.

[1424] See ECJ 15 May 2008, C-416/06 *Lidl Belgium GmbH & Co. KG v Finanzamt Heilbronn*, para. 22.

single entity which is resident in one State but operates in the Host State through a PE.[1425] Because the PE is not an autonomous entity, in principle the losses of a PE are part of the taxpayer as whole, i.e. the natural treatment of a PE loss is to be offset against any profits of the head office, unless otherwise stated. In contrast, in the case of two separate companies, each company is a separate taxpayer and thus, in principle, there is no offsetting of the losses of one company against the profits of another. There is therefore a different starting point between a PE in a Member State of a company in the other Member State – where the loss of the PE may, in principle, be offset immediately - and the situation of two companies resident in two different Member States where specific legislation (just as in a pure domestic situation) is required to allow pooling of results. This misconception seems to be the reason why the Court followed the proportionality test stated in *Marks & Spencer* and disregarded the cash-flow disadvantages and the solution proposed by AG Sharpston. In fact taking properly into account the fundamental difference between PE and subsidiaries[1426] would likely have allowed the CJ to depart from the *Marks & Spencer* outcome and arrive at a decision more in accordance with the proportionality test. The differentiation from a Home State perspective between foreign subsidiaries and foreign PEs has been typically recognized by the CJ. In this regard, it is interesting to speculate as to the reason why the solution followed by the CJ was not to differentiate in this case law between loss compensation from legally independent taxpayers and loss compensation concerning tax treaty exempt income within the same taxpayer with a foreign PE[1427]. A possible answer may be the relevance of the double tax treaty. After concluding in *Lidl Belgium* that Germany did not have to take into account foreign losses because those losses were not final under the *Marks & Spencer* conditions, the CJ reaffirmed that:

> "[...] where a double taxation convention has given the Member State in which the permanent establishment is situated the power to tax the profits of that establishment, to give the principal company the right to elect to have the losses of that permanent establishment taken into account in the Member State in which it has its seat or in another Member State would seriously undermine a balanced allocation of the power to impose taxes between the Member States concerned."

It is possible to advance several reasons as to why the adoption of recapture mechanism would have – in any of these cases - been a more appropriate method than the limitation to final losses in order to attain the proportionality test.[1428]

[1425] The notion ('fiction') of independence of the PE is relevant for the purposes of profits attribution but does not make the PE an autonomous fiscal entity.

[1426] Also represents a contradiction, *inter alia*, with cases ECJ, 18 September 2003, C-168/01, *Bosal Holding BV v Staatssecretaris van Financien* para. 32 and CJ 25 February 2010, C-337/08, *X Holding B.V. v Staatssecretaris van Financiën*, paras. 36-40.

[1427] Agreeing with the position followed by the CJ in this aspect, see Daniela Hohenwarter, *Verlusterwertung im Konzern* Band 59, Lexis Nexis (2009), pp. 294-295.

[1428] Similarly stating that if the CJ had adopted a deduction-recapture mechanism, many of the issues that derived from the *Marks & Spencer* ruling would not have emerged, see Michael Lang, "Has the Case Law of the ECJ on Final Losses Reached the End of the Line?", *European Taxation* 12 IBFD (2014), p. 539.

First and foremost because a recapture mechanism would solve the (entire) tax disadvantage arising from a cross-border situation by granting the same treatment than in a domestic situation, i.e. the immediate offsetting of losses with profits. In a group situation the benefit (or one of the main benefits) it is precisely the cash advantage which is recognized[1429] by the Court:

> "Group relief such as that at issue in the main proceedings constitutes a tax advantage for the companies concerned. By speeding up the relief of the losses of the loss-making companies by allowing them to be set off immediately against the profits of other group companies, such relief confers a cash advantage on the group." [underscore BdS]

AG Kokott appears precisely to have recognized the appropriateness of the deduction-recapture mechanism when considering that:[1430]

> "A system of relief for losses incurred by non-resident subsidiaries which was practicable for the internal market could only connect their current relief with the incorporation of future profits, as has already been discussed in *Marks & Spencer*. Such a solution would offer the parent company both the cash flow advantage and the advantage of relief in respect of the total loss. However, this solution would result in a broad degree of equal treatment of losses incurred by non-resident and resident subsidiaries. It would thus undermine the principle in established case-law that a Member State is required to take into account a loss from foreign activity only if it also taxes that activity."

Therefore, it is hard to understand the reason why the Court did not take this properly into consideration[1431]. It appears that the CJ was influenced by the conclusions of AG Maduro who concluded that *equivalent treatment*[1432] between domestic situations and cross-border situations would be achieved only in case of cross-border relief involving final losses. The reference to equivalent treatment by AG Maduro represents a contradiction in its terms because the cash-flow advantage occurring with the immediate offset of losses in a domestic scenario – the main benefit of group relief – is not equivalent to the cash-flow disadvantage arising in a cross-border scenario.[1433]

[1429] See ECJ 13 December 2005, C-446/03 *Marks & Spencer plc v David Halsey (Her Majesty's Inspector of Taxes)*, para. 32.

[1430] Opinion of Advocate General Kokott delivered on 23 October 2014, in case C-172/13 *European Commission v United Kingdom*, para. 49.

[1431] As stated by AG Sharpston in her Opinion delivered on 14 February 2008, in case C-416/06 *Lidl Belgium GmbH & Co. KG v Finanzamt Heilbronn*, para. 30:

> "It seems anomalous that, having clearly accepted the potential significance of the denial of a cash-flow advantage and categorised it (correctly) as a prima facie infringement of Article 43 EC, the Court did not also examine whether, where the restriction was prima facie justified, the denial of a cash-flow advantage which was an unavoidable consequence was disproportionate."

[1432] See Opinion of AG Maduro delivered on 7 April 2005 in case C-446/03, Case C-446/03, *Marks & Spencer plc v David Halsey (Her Majesty's Inspector of Taxes)*, paras. 76, 77 and 80.

[1433] See Mathieu Isenbaert, *EC Law and the Sovereignty of the Member States in Direct Taxation* IBFD Doctoral Series no. 19, (2010) p. 721.

As a matter of principle, the position of the Court in these rulings is somewhat surprising[1434] as it takes into account the immediate effects of a negative judgment on Member States' tax systems instead of requiring them to find less restrictive means, especially considering that in other lines of case law,[1435] the CJ left it to Member States to overcome negative decisions. The proportionality test requires that a provision is not necessary (thus not proportionate) in the case a less restrictive measure could have allowed attaining the accepted Treaty objective breaching the fundamental freedoms in a less restrictive way. Such test requires, by nature, a comparison between the potentially offending domestic laws of the Member States with other possible less restrictive measures. To disregard an alternative as the recapture mechanism based on the fact that such would require harmonizing measures does not seem to be a particularly compelling reason and constitutes a distortion of the necessity as a test inherent to proportionality. A reference to lack of harmonisation is an argument to argue that the situation does not fall within the definitional scope of the fundamental freedoms but surely not a reason for qualifying the notion of necessity when applying the proportionality test.[1436]

The outcome reached in *Marks & Spencer* seems to confirm that the CJ's power is hardly an issue. In this case, the CJ required the Member State to extend it taxing jurisdiction further than it has chosen to do so: deduct final losses of foreign subsidiaries over which it had never exercised any taxing powers. There seems to be no difference in this regard between requiring a Member State to extend its jurisdiction over final losses or, alternatively, tell a Member State to allow deduction of losses clarifying that it is allowed to recapture those losses in later years.[1437] In fact, the judgment of the Court even goes a step further as it is not only requires the Member State of the parent company to extend its jurisdiction but also enacts positive conditions such as to allow the cross-border loss relief: the need to exhaust the use of the losses in the Member States of the subsidiaries.
Secondly, it would be perfectly appropriate to meet the objectives of preventing the justifications accepted by the Court: the double use of losses, the balanced allocation of taxing rights and the prevention of tax avoidance. Something that the condition of the exhaustion of the losses enacted as the condition for cross-border loss relief in the *Marks & Spence*r judgment is not entirely convincing.

[1434] See A. Cordewener, G. Kofler & S. van Thiel, "The Clash Between European Freedoms and National Direct Tax Law: Public Interest Defences available to Member States", *Common Market Law Review* 46 (2009), p. 1992.
[1435] See, for instance, ECJ 11 March 2004, C-9/02 *Hughes de Lasteyrie du Saillant / Ministère de l"Économie, des Finances et de l"Industrie,* where the Court considered the French exit tax provisions to be in breach of the freedom of establishment without considering whether France was able to tax, on a subsequent sale of an asset, the appreciation in value that occurred while the taxpayer was a French resident.
[1436] See Julian Ghosh, *Principles of the Internal Market and Direct Taxation*, Key Haven Publications PLC (2007), p. 219.
[1437] See Werner C. Haslehner, "Cross-Border Loss Relief for Permanent Establishments under EC Law" 64 *Bulletin for International Fiscal Documentation* 1 IBFD (2010), p. 41.

There is no risk of dislocating the tax base: if in a first moment the tax base is decreased in one Member State, in a second moment it would be increased by the amount of the losses previously deducted. On the other hand, the solution found by the CJ to require demonstrating that the subsidiary/PE had exhausted the possibility to use the losses in future years seems quite irrelevant. The Court could have limited itself to denying the use of the losses as long as they had been used in the Member State where they were incurred. The condition of possible future use of the losses is irrelevant in the context of group taxation regimes that aim at relieving current year losses.
It is difficult to concede how the solution of the CJ for the proportionality requirement is met as concerns the balanced allocation of powers to tax because giving relief for final losses is actually more detrimental to symmetry than giving relief for temporary losses considering the possibility to recapture previously used losses. Again, the condition of exhaustion of use of the losses does not appear to be relevant to safeguard the balanced allocation of the powers to tax between Member States. The balanced allocation of the powers to tax is jeopardized in any event, that is, irrespective of whether the losses are used or not in the Member State where the subsidiary/PE is located.
Finally, the exhaustion of the losses in the Member State of the subsidiary is also irrelevant to prevent tax avoidance in the sense of "loss-trafficking" or seeking the relief of the losses in a high tax Member State. In fact, and once the conditions of *Marks & Spencer* are met and the use of the losses has been exhausted, it is perfectly possible to seek relief of the losses against the profits of the company established in the Member State with the highest tax rate.

In any event, arguing in favour of a recapture mechanism requires also testing it against the fundamental freedoms. That was precisely the background of the *Krankenheim Wannseee* case.[1438] At stake[1439] were the former German deduction-recapture rules. Under those rules, losses incurred by a foreign PE could be immediately offset in Germany, even if the profits of such PE were exempt pursuant to the applicable tax treaty. At a later moment, such deduction would give rise to taxation of the profits arising from the activity of such PE, up to the amount of the previously deducted losses. *Krankenheim Wannsee* was a German company with an Austrian PE. Between 1982 and 1990, the PE incurred losses that were deducted against the profits of the head office in Germany. The PE became profitable from 1991 to 1994 and the tax base in Germany was increased up to the amount of the previously deducted losses. Austrian rules gave priority to the deduction of PE losses, not to the State where they were incurred, but rather to the State of the enterprise. In Austria, it was not possible to carry-forward those losses because such was only permitted in cases where it had not been possible to take them into account in the State where the company owning the

[1438] See ECJ 23 October 2008, C-157/07 *Finanzamt für Körperschaften III in Berlin v Krankenheim Ruhesitz am Wannsee-Seniorenheimstatt GmbH*.
[1439] For an analysis see, *inter alia*, English et al,"Krankenheim Ruhesitz am Wannsee-Seniorenheimstatt: cross border loss relief", *Highlights & Insights on European Taxation* 2009/1.4, pp. 33-44.

PE was established.[1440] In other words, since the losses of the PE previously incurred had already been taken into account against the profits of the Germany head office in earlier years, they could not be taken into account in Austria, according to the relevant legislation. Therefore, the outcome of the combined effects of both Austrian and German tax systems in the end was that the losses could not be deducted in either Member State.
The CJ started by making a distinction with its previous case, *Lidl Belgium*. In *Krankenheim Wannsee,* it was possible – similar to pure domestic situations - to deduct the losses incurred by the PE located in another Member State against the profits of the head office in Germany. However, it considered that as from the moment that the losses were reintegrated in the German tax base, the tax advantage had been withdrawn leading to a less favourable tax treatment in cross-border situations, which amounted to a restriction to freedom of establishment. The CJ accepted[1441] the usually rejected justification of the need to guarantee the coherence of the tax system[1442] considering the "direct, personal and material link" between deduction of losses and subsequent recapture which reflected the "logical symmetry" of a system which operated in a "perfectly symmetrical manner".

In *Krankenheim Wannsee,* the Court still considered the justification to the German rules to be proportionate although the losses were final in the sense that could benefit from carry-forward in Austria. It recalled[1443] in that regard that:

> "[...] it should be remembered that, according to consistent case-law, in the absence of any unifying or harmonising Community measures, Member States retain the power to define the criteria for taxing income and wealth in a view to eliminating double taxation, by means of conventions if necessary.
>
> That competence also implies that a Member State cannot be required to take account, for the purposes of applying its tax law, of the possible negative results arising from particularities of legislation of another Member State applicable to a permanent establishment situated in the territory of the said State which belongs to a company with a registered office in the first State.
>
> The Court has held that freedom of establishment cannot be understood as meaning that a Member State is required to draw up its tax rules on the basis of those in another Member Sate in order to ensure, in all circumstances, taxation which removes any disparities arising from national tax rules, given that the decisions made by a company as to the establishment of commercial structures abroad may be to the company's advantage or not, according to circumstances."

[1440] See ECJ 23 October 2008, C-157/07 *Finanzamt für Körperschaften III in Berlin v Ruhesitz am Wannsee-Seniorenheimstatt GmbH*, para. 12.
[1441] See ECJ 23 October 2008, C-157/07 *Finanzamt für Körperschaften III in Berlin v Krankenheim Ruhesitz am Wannsee-Seniorenheimstatt GmbH*, paras. 42-44.
[1442] This justification was accepted for the first time in the *Bachmann* case. See ECJ 29 January 1992, C-204/90 *Hanns-Martin Bachmann v Belgian State*, paras. 27-28.
[1443] See ECJ 23 October 2008, C-157/07 *Finanzamt für Körperschaften III in Berlin v Krankenheim Ruhesitz am Wannsee-Seniorenheimstatt GmbH*, paras. 48-50.

One would probably have expected a different outcome since the Austrian PE *had exhausted the possibilities* available to have the loss relieved in that (the source) State and therefore. that the losses would be considered final in accordance with the *Mark & Spencer* meaning. This leads to the need to try to explain the difference between the ruling of this case and the decision in *Lidl Belgium* and what were the "particularities of the legislation of another Member State" (Austria) that led the Court to reach a different outcome.

A first explanation to be given is that in *Krankenheim Wannsee*, the deduction and recapture rules did exist (contrary to *Lidl Belgium* where they were no longer in force). Therefore, the CJ was at liberty to determine that those rules were proportional. And it would not be forcing a Member State to adopt specific rules considering its limited negative harmonisation role.[1444] This argumentation is not convincing. Aside from the already disputed assessment about the powers of the CJ in this case law, this explanation merely explains why did the CJ accepted the cash-flow disadvantages in one case and not in the other, but says nothing about why did the final losses in *Krankenheim Wannsee* passed the proportionality test.

A second possible explanation would be to say that with *Krankenheim Wannsee,* the CJ would be altering its thoughts, turning more favourably to defending the tax sovereignty of Member States. In that regard, the responsibility regarding final losses would be shifted back the source State and therefore, the Court would be changing its former rulings in *Marks & Spencer* and, in particular, *Lidl Belgium*. This explanation is also not convincing. It seems difficult to conceive that the same Chamber of the Court, composed of the same judges, would be turning its reasoning within a period of less than six months. Especially considering that *Lidl Belgium* was clearly within the background[1445] of the decision in *Krankenheim Wannsee*. Again, the silence of the CJ regarding the no possibilities test should, as a matter of principle and for the sake of searching for consistency in the Court's reasoning, not be interpreted as a change of course in the case-law.

A third explanation would be that with *Krankenheim Wannsee,* the CJ would be making clear that only liquidation losses (and likely losses which could no longer be used upon a sale to a third party) would be considered as final under the no possibilities test. Loss carry forward expiry could not be considered as being final for the purposes of shifting the responsibility of being taken into account in the State of residence. This could arguably be reconciled with *Marks & Spencer*: the facts of the case referred only to losses from companies in liquidation or which had been sold to a third party. But this would again collide with the factual background of *Lidl Belgium*: although in the analysis of the

[1444] See Tom O'Shea, "German Loss Deduction and Reintegration Rules and the ECJ", 53 *Tax Noters International* 11, 16 March 2009, p. 969.

[1445] The CJ decision in case C-356/04, *Lidl Belgium GmbH & Co KG v Etablissementen Franz olruyt NV* is referred five times throughout the decision in C-157/07 *Finanzamt für Körperschaften III in Berlin v Ruhesitz am Wannsee-Seniorenheimstatt GmbH*, namely in paras. 31-33, 38 and 40.

proportionality issue[1446] there is only an ambiguous statement that *Lidl Belgium has not shown that the conditions laid down in paragraph 55 of the judgment in Marks & Spencer were satisfied* this comes after a reference[1447] that *Lidl Belgium* could carry forward the losses for subsequent periods, meaning that it seems clear that the Court was reaffirming the finality of the losses, also in the case of loss carry forward expiry. In fact, following this third explanation would create some uncertainty in the sense that it is much more difficult to determine when a loss incurred by a PE becomes final unless if follows from restrictive loss carry-forward provisions implemented by the source State[1448]. This is because, from a legal point of view, the loss carry-forward is not a right of the PE itself but rather of the non-resident company. Therefore, even if a PE is dissolved, it may still be possible (at least in some Member States) for the enterprise to obtain relief in the source State (e.g. by opening a new PE). Ultimately, this would mean that losses would only be final if the head office were liquidated leading to a situation where the PE losses could no longer be used, even in the State of the enterprise. Such strict requirement would hardly be compatible with the proportionality test and, furthermore, it would create a discrepancy with the liquidation of foreign companies.
Apart from the issues referred to, this third explanation also disregards a fundamental aspect of the Austrian legislation at the time. Technically the impossibility of using the losses was not due to the elapse of time. As previously referred to, in Austria the carry forward of PE losses was in general possible but unavailable in the concrete case because they had already been taken into account in Germany.

This could lead to another explanation to converge this ruling with *Lidl Belgium*: responsibility for losses is not shifted to the parent company as long as the foreign losses carry forward is either effectively available (*Lidl Belgium*) or at least existing (*Krankenheim Wannsee*). This would be based on the principle that losses should be primarily used in the State where they arise. Therefore, the mere existence of loss carry forward rules would be sufficient to relieve the State of residence from its obligation to take over foreign losses irrespective of whether the taxpayer actually benefitted from those rules. Still it would not be entirely clear if this interpretation would be compatible with *Marks & Spencer* in which the CJ seemed to have looked at the effective possibility of benefitting from loss carry forward or carry back in order to qualify the losses as final for the purposes of being taken by the State of the parent company. In addition, one should understand *Krankenheim Wannsee* as a case which dealt with German rules in order to assess its compatibility with EU law and not with Austrian legislation.

A possible fifth explanation[1449] would be that the conditions set forth in *Marks & Spencer* and re-affirmed in *Lidl Belgium* merely determine the moment – when they become final -

[1446] See ECJ 15 May 2008, C-416/06 *Lidl Belgium GmbH & Co. KG v Finanzamt Heilbronn*, para. 51.
[1447] See ECJ 15 May 2008, C-416/06 *Lidl Belgium GmbH & Co. KG v Finanzamt Heilbronn*, para. 51.
[1448] See Werner C. Haslehner, "Cross-Border Loss Relief for Permanent Establishments under EC Law" 64 *Bulletin for International Fiscal Documentation* 1 IBFD (2010), p. 41.
[1449] See Daniela Hohenwarter, *Verlusterwertung im Konzern* Band 59, Lexis Nexis (2009), pp. 335-337.

as from which the residence State has to take into account foreign losses in a symmetrical system. As soon as the final losses are taken into account in the State of the parent company the loss compensation system changes from a symmetrical system to an asymmetrical system, and the *Krankenheim Wannsee* reasoning becomes applicable. This would mean that the State that takes into account final losses could always recapture those losses as from the moment that the foreign PE (or subsidiary) becomes profitable in the other Member State. This solution is interesting – even for Member States struggling with the budgetary consequences of the implementation of *Marks & Spencer* judgment - but in my view, raises two difficulties. It cannot apply to situations of final losses[1450] resulting from liquidation as in those situations, the entity where those losses were incurred by nature will not be able to become profitable in the future. And although it is literally compliant the conclusions of the Court in *Krankenheim-Wannsee,* it is at least doubtful if such a mechanism would fit into the overall approach, which appears to underline the judgments of the CJ in the case law dealing with cross-border loss relief.

A sixth explanation, in my view the most correct one, is that the responsibility of the residence State with regard to final losses is shifted back to the source State where the finality is the result of the discriminatory provisions of the source State and not of the State of the head office/parent company. It is clear that the German legislation was not discriminatory at all. In fact, Germany did not provided for a less favourable treatment[1451] between domestic and cross-border situations and therefore effectively, there was no restriction of the freedom of establishment.[1452] The asymmetric system of loss compensation did not constituted a breach of EU law from the outset.[1453] Differently, the

[1450] This is related to the meaning of final losses for the purposes of the no possibilities test analysed *infra* in 17.4.

[1451] The tax burden between a purely domestic and a cross-border situation is indeed in principle identical. This is logical since in year 1 both a domestic and foreign PE can have their losses deductible in the tax base of the head office. In year 2 and when the PE becomes profitable, all the profits of the PE are taxable in the State of the head office both in a domestic and cross-border scenario. In this latter case, the tax burden can even be more favourable from the perspective of the head office State when compared to a pure domestic scenario in the situations where foreign profits exceed the previously deducted losses since in that case, the foreign profits added to the tax base will be limited to the amount of the losses previously deducted. See on this, Jérôme Monsenego *Taxation of Foreign Business Income within the European Internal Market*, IBFD Doctoral Series no. 22 (2012), p. 482 or Gerard T. K. Meussen, "The ECJ's Judgement in Krankenheim – The Last Piece in the Cross-Border Loss Relief Puzzle? 49 *European Taxation* 7 (2009), pp. 361-363.

[1452] See P.J. Wattel*,* Driedubbele noot bij HvJ EG 28 Februari 2008, zaak C-293/06, Deutsche Shell, HvJ EG 15 mei 2008, zaak C-414/06, Lidl Belgium, en HvJ EG 23 oktober 2008, zaak C-157/07, Krankenheim Ruhesitz am Wannsee, *BNB 2009/84 – 86*, pp. 1435-1444 which states that the reference to "*less favourable treatment*" in para. 37 of this judgment is simply incorrect.

[1453] It should be stressed that the opposite conclusion applies in the case of an asymmetric system of taxation of profits (i.e. which taxes in principle foreign profits without taking into account foreign losses). A good example may be found in the *Busley-Cibrian* case. The case dealt with German individuals resident in Germany which incurred losses from rental of immovable property in Spain. If those losses had been incurred in Germany they could be immediate offset against the worldwide income of an individual. In the case of foreign losses there was a limitation under which, although those losses could be offset in future years, they could only be used against positive income from immovable property. The CJ considered that the German

Austrian rules were in fact discriminatory as they provided a different treatment: as stated the loss carry forward contained some limitations in case of a PE of a foreign company being available only in case those losses could not be taken into account where the head office was located. The fact is that the Court was not entitled to examine the Austrian legislation. Determining the compatibility of German provisions based on the Austrian particularities is fundamentally inconsistent[1454] with the single entity approach that should, in principle, form the basis of the CJ's reasoning: rules should not be found to be incompatible depending on other Member State's provisions. Still, the CJ seems to have opened the door for this understanding by stating that:[1455]

> "Even supposing that the combined effect of taxation in the State where the principal company of the permanent establishment concerned is situated and tax due in the State where that establishment is situated might lead to a restriction of the freedom of establishment, such a restriction is imputable only to the latter of those states."

In fact, the likely discriminatory character of the Austrian provisions finds support in the judgment of the CJ in the *Philips Electronics UK* case where it was considered that the UK legislation was in breach of the freedom of establishment,[1456] To recall, the background of *Phillips Electronics UK* were the provisions which limited the group relief system in situations involving a UK PE with a foreign head office, when the PE losses could be taken into account in the Member State of the head office. In other words, the similarity to *Krankenheim Wannsee*, involved the impossibility to use domestic incurred losses – via the loss carry-forward mechanism whenever those losses could be taken in the Member State of the head office.

Subsequently, the CJ was confronted with the facts in the *Nordea Bank*[1457]case that dealt with the Danish deduction-recapture rules upon the transfer of foreign PEs. The Danish legislation provided that resident companies take into account on an ongoing basis the profits and losses of their PEs located abroad when determining the taxable income of the company. Nordea Bank, a Danish resident company, incurred losses from its foreign PEs located in Finland, Sweden and Norway lawfully deducted the losses from its taxable PEs. At a later moment, the activities of those PEs were restructured through partial sale of the business to other companies of the group. The losses previously deducted - which had not been matched by subsequent profits - were reincorporated into Nordea Bank's taxable profit. Nordea Bank considered that such reincorporation of the losses was contrary to freedom of establishment.

---

legislation constituted an unjustified restriction to the free movement of capital. See ECJ 15 October 2009, Case C-35/08 *Grundstucksgemeinschaft Busley/ Cibrian v Finanzamt Stuttgart-Korperschaften*.

[1454] See Werner C. Haslehner, "Cross-Border Loss Relief for Permanent Establishments under EC Law" 64 *Bulletin for International Fiscal Documentation* 1 IBFD (2010), p. 42.

[1455] ECJ 23 October 2008, C-157/07 *Finanzamt für Körperschaften III in Berlin v Krankenheim Ruhesitz am Wannsee-Seniorenheimstatt GmbH*, para. 51.

[1456] CJ 6 September 2012, Case C-18/11, *The Commissioners for Her Majesty's Revenue & Customs v Philips Electronics UK Ltd*. For a description of this case see *supra* 14.2.3.1.

[1457] CJ 17 July 2014, C-48/13 *Nordea Bank Danmark A/S v Skatterministeriet*.

The CJ was of the view that the Danish legislation which requires the reincorporation of losses lawfully deducted in respect of the foreign establishments constituted a restriction to freedom of establishment. The Court accepted the justification brought forward by Denmark according to which the rules referred to were necessary in order to ensure a balanced allocation of the power to impose taxes between Member States in connection with the prevention of tax avoidance. The objective of the Danish legislation was to avoid the risk of tax avoidance which would consist, in particular, of a group organising its business in such a way that it deducts from its taxable income in Denmark the losses incurred by a loss-making PE situated abroad and then, once that establishment has become profitable, transfers the establishment's business to a company which it controls but which is not liable to tax in Denmark. If Denmark were denied the power to reincorporate the losses thereby deducted into the taxable profit of the Danish company carrying out the transfer when it has lost the power to tax any future profits, arrangements such as the above would artificially erode its tax base and, therefore, affect the allocation of the power to impose taxes. However, the CJ considered that the legislation went beyond what is necessary to attain that objective. The CJ recalled that the balanced allocation of the power to impose taxes has the objective of safeguarding the symmetry between the right to tax profits and the right to deduct losses. That means that the losses deducted in respect of a PE must be capable of being offset by taxation of the profits made by it under the tax jurisdiction of the Member State in question, that is to say, both the profits made throughout the period when the PE belonged to the resident company and those made at the time of the PE's transfer. In the present case it was not disputed that the profits of a PE belonging to a resident company that were made before the PE's transfer to a non-resident company in the same group are taxable in Denmark. In addition, in the event of a subsequent sale, the gain made upon the transfer is then added to the taxable income of the Danish company carrying out the transfer. Therefore, the Court concluded that the reincorporation of the previously deducted losses went beyond what was necessary for the need to safeguard the balanced allocation of the power to impose taxes. It stressed that such conclusion was not altered by the fact, put forward by the Danish Government, that it would be difficult for it in the event of an intragroup transfer to verify the market value of the business transferred in another Member State. Such difficulties were not specific to cross-border situations since the Danish authorities already necessarily carried out similar checks when a business was sold in the context of an intragroup transfer of a resident establishment. Moreover, the Danish authorities in any event would always have the power to request from the transferring company the documents that appear to them necessary in order to verify whether the value of the business adopted for the purpose of calculating the gain on transfer of a foreign establishment was the same as the market value.

There are two fundamental differences between *Krakenheim* and *Nordea Bank.* In *Krakenheim*, the CJ dealt with a situation of an ongoing activity of the PE where the taxation involved the recapture of actual profits in a context where Germany applied the exemption method. Therefore, the deduction of the losses was always merely temporary

and exceptional: as from the moment that the foreign PE became profitable and the recapture mechanism referred to the correspondent amount of previously deducted losses.
In *Nordea Bank,* the fact pattern involved the sale of a foreign PE, but in the context of applying the Danish credit method. In that case, both the taxation of foreign profits and losses occurs is a regular consequence of the application of the credit method which taxes both foreign profits and deduction of foreign losses in a symmetric manner.[1458] The Court challenged the proportionality of the legislation as to the amount of the profits taxed by Denmark upon the transfer of the PE within the specific framework of an anti-avoidance rule[1459] in which Denmark wanted to preserve his taxing rights. This limitation is applicable

[1458] Confirming that this limitation of the amount of the previously deducted losses to the amount of profits with a domestic link upon the sale of the foreign PE appears to be applicable in the context of a credit method but not in an exemption method. see the Opinion of AG Whatelet in the *Timac Agro* case. Timac Agro is a German company that had held an Austrian PE since 1997. On 31 August 2005, that PE was sold to an Austrian company limited by shares belonging to the same group as the German company. From 1997 to 2005 (with the exception of 2000 and 2005), the PE incurred losses that were deducted in Germany by Timac Agro. During the course of a tax audit, the deducted losses regarding the years of 1997 to 2004 were rectified. The PE losses initially deducted in the results of Timac Agro regarding the years of 1997 and 1998 (under the then applicable deduction recapture regime) were reinstated in the taxable result of 2005. The deduction of the losses concerning the years of 1999 to 2004 was refused (during this period Germany applied an exemption regime under the applicable double tax treaty concluded with Austria). The CJ was confronted with two questions for the two different regimes that denied the deduction of the PE losses:

1) For the deduction recapture regime concerning the years of 1997 and 1998, whether the German legislation that provided the reinstatement of an amount corresponding to losses of a foreign permanent establishment previously taken into account by way of a tax reduction is the sale of that permanent establishment to another company limited by shares within the same group as the seller, was in breach with the freedom of establishment.
2) Under the exemption regime in force in the subsequent years, whether the German legislation according to which income from Austria is to be exempt from the basis of assessment for German taxation if that income can be taxed in Austria — if losses accrued in an Austrian permanent establishment of a German company limited by shares can no longer be taken into account in Austria because the permanent establishment is sold to an Austrian company limited by shares belonging to the same group as the German company was in breach with the freedom of establishment.

Specifically, with reference the first question, AG Wathelet drew the distinction between Nordea Bank and the German legislation. Since in this latter case, Germany provided for an asymmetric system of taxation – exemption of profits but deduction of losses – the AG concluded that it was logical to allow the recapture all the previously deducted losses upon the PE sale without any limitation. See the Opinion of AG Wathelet delivered on 3 September 2015 in case C-388/14*Timac Agro Deutschland GmbH v Finanzamt Sankt Augustin*, paras. 56-57.

[1459] As stated by AG Kokott in her Opinion delivered on 13 March 2014 in case C-48/13, *Nordea Bank Danmark A/S v Skatteministeriet*:

> "In the present case, however, there is no need to decide whether, for the purposes of fiscal coherence, a Member State's power of taxation which is limited by the credit method also entitles that Member State to take account of losses incurred only to a limited extent. For it is not the stated and recognisable objective of the Danish recapture rule to establish an appropriate ratio between the taking into account of profits and losses arising from activities taxed by way of the credit method. Rather, the rule is intended only — as also the Kingdom of Denmark itself has submitted — to prevent the full loss relief available under the credit method from being abused in a particular case. As a rule, however, Danish tax law specifically confers the advantage of full

in situations where the recapture does not concern actual profits but derives from the sale where all the amount of the losses previously deducted are added back. According to the CJ, the recapture of the losses must be limited to the amount of profits which had a domestic link.

From this perspective, the conclusions of the Court in *Nordea Bank* do not jeopardize[1460] the compliance with EU law of a deduction recapture rule in a situation where a Member State would allow the deduction of foreign losses temporarily without taxing the corresponding profits.

Therefore, the CJ case law actually confirms that, in general, a deduction recapture mechanism is entirely compliant with EU law. The Commission similarly shares this same view.[1461] By disregarding cash-flow disadvantages within the context of cross-border group relief, the Court's approach ends up creating inequality as between taxpayers depending on whether they are in a domestic or cross-border situation which underlies its reasoning as to find a discriminatory treatment and the purpose of the internal market itself. Additionally, a deduction recapture mechanism is conceptually more adequate as it does not involve adopting an overall approach by making the deduction of cross-border losses dependent on the treatment in the State where they were originally incurred[1462].

17.3 Cross border losses and the "always somewhere approach"

Another relevant issue when dealing with the proportionality test within the scope of the case law of group taxation regimes is to determine the origin and underlying reasoning of the no possibilities test. In *Marks & Spencer,* the CJ required the UK to provide relief for the subsidiaries' losses in a particular situation: when they could no longer be offset in the subsidiaries' State they should be taken into account at the level of the parent company, which on the contrary, had a tax base to offset such losses.

---

loss relief on taxable persons, even if such loss relief cannot be counterbalanced in the absence of future profits".

[1460] In this regard, Joachim English states that taking into account that the decision in *Nordea Bank* involved the application of a credit method in a very particular context and conclusions should not be automatically drawn to other deduction recapture mechanisms. See Joachim Englisch, "Nordea Bank Danmark A/S: National tax on profits – taxation of the activity of foreign permanent establishments of resident companies", *H&I* 2014/322, p. 10.311

[1461] This is reflected in the 1991 Draft Directive on Cross-Border Loss Relief to the more recent Communication from the Commission to the European Parliament and the Council: *A Fair and Efficient Corporate Tax System in the European Union: 5 Key Areas for Action*, COM (2015) 302 final of 17 June 2015 where the Commission again proposes (at least until the approval of the consolidation element of the CCCTB), the adoption of a mechanism to allow cross-border loss relief followed by a mechanism to recapture these losses once the group entity is profit-making again.

[1462] See Wolfgang Schön,"Neutrality and Territoriality – Competing or Converging Concepts in European Tax Law?", 69 *Bulletin for International Taxation* 4/5 IBFD (2015), p. 287.

This requirement which has been labelled an always-somewhere approach[1463]- the obligation of one Member State to allow cross-border loss relief when those losses can no longer be used in the State where they arose – seems to have been inspired and can be traced back[1464] to the *Schumacker* case.[1465] This case dealt with the issue on whether deduction for personal allowances should be granted in the source State for an individual resident in one Member State but earning most of its income in the Member State of source. The Court concluded in that case that, in principle, it should be the State of residence which is the one to take personal allowances into account[1466] but, when such individual obtained insufficient income in that State, it is up to the State of source, where most of the income is earned, to take that burden.[1467]

The parallel with *Marks & Spencer* becomes more evident when looking at the Court reasoning:[1468]

> "[…] In a situation such as that in the main proceedings, the State of residence cannot take account of the taxpayer's personal and family circumstances because the tax payable there is insufficient to enable it to do so. Where that is the case, the Community principle of equal treatment requires that, in the State of employment, the personal and family circumstances of a foreign non-resident be taken into account in the same way as those of resident nationals and that the same tax benefits should be granted to him."

In fact, AG Léger in his Opinion in *Ritter-Coulais,* had already proposed to apply the *Schumacker* doctrine in the field of foreign losses:[1469]

> "92. The difference in treatment between taxpayers who work in a Member State but are not resident there and taxpayers who both work and reside in the State in question, which consists in the former being denied recognition of negative letting income, does therefore

---

[1463] See Ben Terra & Peter J. Wattel, *European Tax Law*, Fiscale Handboeken no. 10, 2 nd edition, Kluwer Detenver (2012) 898-900 who also label it as "one-market approach".

[1464] See Simon Whitehead, "Cross-border Group Relief Post Marks & Spencer", *Tax Planning International*, May 2008, BNA, pp. 9-12 or Frederik Boulogne and Nana Sumrada Slavnic, "Cross-Border Restructuring and "Final Losses", *European Taxation* 10 IBFD (2012), p. 486.

[1465] See ECJ 14 February 1995, C-279/93 *Finanzamt Koln-Altstadt v Roland Schumacker*. For comments on this case see, *inter alia*, Frans Vanistendael, "The Consequences of Schumacker and Wielockx: Two Steps Forward in the Tax Procession of Echternach", 33 *Common Market Law Review* (1996), pp. 255-269, or Peter J. Wattel, "The Schumacker Legacy: A Survey of the Taxation of Cross-Border Employment in Europe", 35 *European Taxation* 11/12, IBFD (1995), pp. 347-423.

[1466] See ECJ 14 February 1995, C-279/93 *Finanzamt Koln-Altstadt v Roland Schumacker*, para. 32.

[1467] A similar reasoning to *Schumacker* was followed in subsequent case law. See, *inter alia*, cases ECJ 12 December 2002, C-385/00 *F.W.L. de Groot v Staatssecretaris van Financien*, paras. 88-95; ECJ 1 July 2004, C-169/03 *Florian W. Wallentin v Riksskattteverket*, paras. 15-22; ECJ 18 July 2007, C-182/06 *État du Grand-Duché de Luxembourg v Hans Ulrich Lakebrink and Katrin Peters-Lakebrink*, paras. 30-31; ECJ 16 October 2008, C-527/06 *R.H.H. Renneberg v Staatssecretaris van Financiën*, paras. 59-62; CJ 28 February 2013, C-168/11, *Manfred Becker, Christa Becker v Finanzamt Heilbronn*, paras. 43-52; or CJ 18 June 2015, *Staatssecretaris van Financiën v D. G. Kieback*, para. 28.

[1468] See ECJ 14 February 1995, C-279/93 *Finanzamt Koln-Altstadt v Roland Schumacker*, para. 41.

[1469] See Opinion of AG Léger delivered on 1 March 2005, in case C-152/03, *Hans-Jürgen Ritter-Coulais and Monique Ritter-Coulais v Finanzamt Germersheim*, paras. 97-98.

constitute, to that extent, indirect discrimination based on the criterion of residence, contrary to Article 48 of the Treaty.

93. The reasons on which this view is based have been articulated by the Court in cases concerning the availability to non-resident taxpayers of tax benefits based on personal and family circumstances.

94. In that regard, the case-law of the Court holds that, where a taxable person has exercised the right to freedom of movement, while it is indeed up to the State of residence to take into account that person's personal and family circumstances, the person in question still has to be sufficiently taxable in that State to enable those circumstances to be taken into account. If that is the case then the State of residence will be in a position to take into account the personal and family circumstances of the resident taxpayer.

95. In that scenario, the tax benefits attaching to taxpayers" personal and family circumstances under the domestic law of the State of employment, which are taken into account in the calculation of income tax, can be denied to non-residents since comparable benefits can be granted to them in their State of residence.

96. On the other hand, if the taxpayer does not have sufficient taxable income in the State of residence for this to be done, it will necessarily be up to the State of employment to do so.

97. The import of this case-law is that the taxation of taxable persons in their State of employment or in their State of residence must not ultimately lead to a situation in which their personal and family circumstances are not taken into account in either, or are taken into account only in part.

98. More generally, this case-law means, in my view, that *non-residents" ability to pay tax,* which depends not only on account being taken of their personal and family circumstances, but also on *account being taken of their total income and losses*, should not be assessed differently by the competent authorities on the sole ground of place of residence, where resident and non-resident taxpayers alike receive all or virtually all their taxable income in the taxing State."

The always somewhere approach is even more apparent by looking at the subsequent case law which was developed the *Schumacker* doctrine. The *Wallentin* case involved a German resident student who received a grant from the German State plus a monthly sum from his parents that did not constitute taxable income in Germany. In the meantime, he carried out temporary work in Sweden from which he received the related payment. Considering the work performed in Sweden, he applied for a basic allowance deduction that, if granted, would lead to such income being tax exempt. Such allowance, however, was denied due to the fact that he was not resident in Sweden. The CJ followed the same approach it had taken in *Schumacker*. Since there was no sufficient tax base in Germany due to the fact that the income received was not taxable income in Germany, Sweden would have to grant an allowance similar to the one it applied to its residents. In other words, since the residence

State was not in a position to grant personal allowances it was up to the source State to grant them. However, there is a fundamental difference in this case when compared to *Schumacker*: the Court followed a legal interpretation of the *Schumacker* doctrine without taking into consideration whether the greater part of the amount was received in Sweden. True, in this case, the amount of income received in Germany was rather limited but the Court seems merely to have accepted this as relevant to claim the deduction of allowances at source, the fact that the income received in Germany was treated as non-taxable income without proper consideration of the amount.[1470] Other to Schumacker,[1471] the taxpayer was not exactly comparable to a resident of the source State as the work performed was of occasional nature and for a limited period of time.

A later example of the always somewhere approach can be found in the Court's judgment in the case *Commission v Estonia*.[1472] The case dealt with the Estonian personal allowance rules concerning a pension paid to a former resident in Estonia. Under the Estonian tax rules, residents received a tax-free allowance, which was deducted from their income. Non-residents could receive these deductions provided they received at least 75 percent of their taxable income in Estonia during the tax period. The complainant in this case, after reaching retirement age in Estonia, had moved to Finland and worked and acquired the right to a pension there. Consequently, the complainant received two pensions, one in Finland and one in Estonia, of almost the same amount. Under the Estonia-Finland income tax treaty, those pensions were taxable only by the "paying State". Under Estonian law, the complainant's Estonian pension was taxable. However, under Finnish law, the Finnish pension was not subject to income tax because of the very low level of the complainant's total income. The aggregate of the two pensions was only slightly above the tax-free allowance threshold provided in the Estonian law on income tax. In general, the argument brought forward in this case rested on the fact that when the taxpayer's total income was so modest that he was not subject to any tax in his residence State, he was in a similar situation to a resident of the member State in which the pension was paid. The paying State should, therefore, grant personal allowances to non-residents who are in a comparable situation to residents. The CJ ruled in favour of the complainant. Particularly relevant is the statement of the CJ stressing the always somewhere approach:[1473]

> "The Court has also held that, in a situation in which there is no taxable income in the Member State of residence under the tax legislation of that State […], discrimination could arise if personal and family circumstances of a person such as the complainant were taken into account neither in the Member State of residence nor in the Member State of employment […]."

[1470] See M. Isenbaert, *EC Law and the Sovereignty of the Member States in Direct Taxation*, IBFD Doctoral Series no. 19 (2011), p. 406.
[1471] See Chiara Bardini, "The Ability to Pay in the European Market: An Impossible Sudoku for the ECJ", 38 *Intertax* 1 (2010) Kluwer Law International BV, the Netherlands, p. 5.
[1472] CJ 10 May 2012, C-39/12 *European Commission v Republic of Estonia*.
[1473] CJ 10 May 2012, C-39/12 *European Commission v Republic of Estonia*, para. 53.

In *De Groot,*[1474] the Court was even more explicit in addressing this always somewhere approach. The case involved a Netherlands resident employed in different Member States, notably Germany, France and UK. Both Netherlands law and the applicable tax treaties provided for elimination of double taxation based on the exemption with progression method. Therefore, the avoidance of double taxation was calculated by multiplying the Netherlands tax on total income (including both domestic and foreign income) by a certain proportionality factor. Such proportionality factor was represented by a fraction, in which the numerator was the foreign gross income and the denominator the total gross income obtained. It happened that the tax allowances of Mr Groot (such as maintenance payments made to his ex-wife and his tax free income), although relevant for the calculation of the Netherlands tax that was applied to his total income, were not deducted from the total gross income that appears as the denominator in the proportionality factor. This led to an effective denial of those allowances, as most of his income consisted of foreign-based income, and, at the same time, to the impossibility to deduct the personal and family allowances in the other Member States where he was non-resident. Interestingly the Court held that:[1475]

> "The State of residence may also be released from that obligation if it finds that, even in the absence of a convention, one or more of the States of employment, with respect to the income taxed by them, grant advantages based on the personal and family circumstances of taxpayers who do not reside in the territory of those States but receive taxable income there."

From this statement it appears that the Court, in fact, does not make any difference that a State takes personal allowances into account, as long as they are taken into account in some Member State. In other words: there is no clear preference by the CJ as to which State should take over those deductions. For the CJ, the relevance was merely that personal allowances were taken into account in a Member State.[1476]

The next question could be: what were the grounds for the Court to adopt this "always somewhere" approach? It does not seem possible to find an easy answer. But it will be not be in the mere interpretation of the fundamental freedoms as they do not provide for any framework either for a single taxation or a single deduction of losses[1477]. And, as properly stated by Wattel,[1478] the treaty freedoms provide no guidance whatsoever on which State's

[1474] ECJ 12 December 2002, C-385/00 *F.W.L. de Groot v Staatssecretaris van Financien*.
[1475] ECJ 12 December 2002, C-385/00 *F.W.L. de Groot v Staatssecretaris van Financien*, para. 100.
[1476] See Dennis Weber, "In Search of a (New) Equilibrium Between Tax Sovereignty and the Freedom of Movement Within the EC", 34 *Intertax* 12, Kluwer Law International (2006), p. 604.
[1477] Concurrently Schön referring that the fundamental freedoms do not provide a framework for a one-off taxation of income. See Wolfgang Schön, "Neutrality and Territoriality – Competing or Converging Concepts in European Tax Law?", 69 *Bulletin for International Taxation* 4/5 IBFD (2015), p. 279.
[1478] See P.J. Wattel, 'Commentary: Judicial Restraint and Three Trends in the ECJ's Direct Tax Case Law', *Tax Law Review* 62 (2008–2009), pp. 215–216. In any event and as subsequently referred the CJ in its case law typically makes reference to the Member State which has priority to deal with deductions/losses.

jurisdiction takes priority over the other. A possible explanation relies on the underlying theory for the introduction of income tax according to which the taxation of individuals is based on the ability-to-pay principle.[1479] The Court's reasoning is guided by the fact that the exclusion of deductions in a particular situation means that those deductions cannot be taken anywhere within the internal market. This was the reasoning expressly used by the CJ, for instance, in the *Renneberg*[1480] case where the Court specifically stated that:[1481]

> "66. […] the Court stated that the scope of the case-law arising from Schumacker extends to all the tax advantages connected with the non-resident's ability to pay tax which are granted neither in the State of residence nor in the State of employment.
> […]
>
> 69. To the extent that, although residing in one Member State, a person such as Mr Renneberg derives most of his taxable income from salaried employment in another Member State and has no significant income in his Member State of residence, he is, for the purposes of taking into account his ability to pay tax, in a situation objectively comparable, with regard to his Member State of employment, to that of a resident of that Member State who is also in salaried employment there."

Both types of cases (personal and corporate income tax)[1482] deal with a similar issue: deductions arising in one Member State against profits earned in the other Member State. Primarily, those deductions should be taken into account in the Member State where they arose/were incurred (in *Marks & Spencer* the State of residence of the loss making subsidiaries and in *Schumacker,* the Member State of residence of the individual). In the

---

Similarly see Wolfgang Schön, "Neutrality and Territoriality – Competing or Converging Concepts in European Tax Law", 69 *Bulletin for International Taxation* 4/5 IBFD (2015), p. 274.

[1479] See Otto Marres, "The Principle of Territoriality and Cross-Border Loss Compensation", 39 *Intertax* 3 (2011), pp. 124-125, Wolfgang Schön, "Losing Out at the Snooker Table: Cross-Border Loss Compensation for PE's and the Fundamental Freedoms", in L. Hinnekens, P. Hinnekens (eds.), *A Vision of Taxes within and outside the European Bordersm Festschrift in honor of Frans Vanistendael*, (2008), pp. 828-829 or Manfred Mossner, "Source versus Residence – an EU Perspective", *Bulletin for International Taxation* 12 IBFD (2006), pp. 501-502.

[1480] See ECJ 16 October 2008, C-527/06 *R.H.H. Renneberg v Staatssecretaris van Financiën*, paras. 62 and 66.

[1481] Similarly, see ECJ 18 July 2007, C-182/06 *État du Grand-Duché de Luxembourg v Hans Ulrich Lakebrink and Katrin Peters-Lakebrink*, para. 34 where the Court stated that:

> "Secondly, the ground, recalled at para. 31 of the present judgement, on the basis of which the Court made its finding of discrimination in Schumacker concerns, as the Advocate General has pointed out at point 36 of his Opinion, all the tax advantages connected with the non-resident's ability to pay tax which are not taken into account either in the State of residence or in the State of employment (see also the Opinion of Advocate General Léger in Ritter-Coulais, points 97-99) since the ability to pay tax may indeed be regarded as forming part of the personal situation of the non-resident within the meaning of the judgement in Schumacker."

[1482] In this regard, see Frans Vanistendael, "Ability to Pay in European Community Law", *EC Tax Review* 2014/3, Kluwer Law International BV, p. 122 who refers that ability to pay considerations are reflected in the following scenarios: (i) personal deductions and family circumstances; (ii) application of progressive tax rates; (iii) deduction of business expenses, (iv) structure of the rate scale and (v) deduction of losses.

cases where those deductions cannot be taken into account in the Member State where they arise/are incurred then they should be taken elsewhere, meaning in the other Member State where there is sufficient taxable base and as long as, if they were residents in this latter Member State, they would be entitled to do so in a pure domestic situation.
The priority of the State to tax where the profits arose and accordingly to relieve the losses where they were incurred was clearly recognised in *Lidl Belgium* as a justification for the State of the head office to refuse to provide relief for the losses in the PE State. And that was also the reason why the CJ in *Philips Electronics* rejected the arguments of the UK and found its legislation to be in breach of the freedom of establishment, when setting the requirement that losses incurred by a UK PE could not be entitled to group relief when those losses could also be taken into account for tax purposes at the head office. The Court saw the obvious link between domestic losses incurred and their use in the UK. In other words: the primary use of those losses was confirmed by the CJ as belonging to the State in which they were actually incurred, reason by which it rejected any justification brought forward by the UK government.

The development of the CJ case law demonstrated that the always somewhere approach is not absolute. In both *K* and *Commission v UK,* the Court has limited the obligation to import foreign final losses to situations where the law of the State where the losses were initially incurred allows such losses deduction.

The condition that the cross-border deduction is granted only in situations where it can no longer be used in the State in which losses are incurred also aims at avoiding a situation of double deduction.[1483] It is clear that the CJ wants to avoid not only disadvantages but also unintended advantages arising from double deductions.[1484] This is the result of the adoption of the overall approach where the CJ (inadequately as previously analysed) considers the combined tax effects in the Home and Host States.

Additionally, there are some fundamental differences that, it is submitted, enhance the critical reasoning to be addressed to the *Marks & Spencer* decision. First of all, it is not exempt from questions whether the ability-to-pay principle has any relevance in the context of the taxation of companies.[1485]
It should also be stressed that there is a basic distinction between situations involving foreign subsidiaries as in *Marks & Spencer* and foreign PEs. In this latter case, we refer to income, which is allotted to the same person, a domestic taxpayer which also has a taxable presence in another Member State. Differently, foreign subsidiaries are regarded as taxpayers in their own right, which are not within the tax jurisdiction of the parent

[1483] Compare ECJ 14 February 1995, C-279/93 *Finanzamt Koln-Altstadt v Roland Schumacker*, paras. 40 and 41 with ECJ 13 December 2005, C-446/03 *Marks & Spencer plc v David Halsey (Her Majesty's Inspector of Taxes)*, para. 55.
[1484] See, *inter alia*, ECJ 1 July 2004, C-169/03 *Florian W. Wallentin v Riksskattteverket*, para. 23.
[1485] See in general, Otto Marres, "The Principle of Territoriality and Cross-Border Loss Compensation", 39 *Intertax* 3 (2011), p. 125.

company's Home State. Therefore, even if the ability to pay criterion could be relevant for the taxation of companies it is difficult to see its application in the context of different taxpayers. This conclusion can be echoed in Kokott's words:[1486]

> "[…] the abandonment of the *Marks & Spencer* exception also does not infringe the ability-to-pay principle, as the Commission claimed at the hearing. The present case concerns the notional treatment of different taxpayers as one and the same taxpayer. However, parent companies and subsidiaries are not jointly taxed, in principle, because they are separate legal entities each with its own ability to pay. At least, the subsidiary does not have access to the assets of the parent company. Accordingly, I consider that a group taxation system is not necessary *a priori* for reasons relating to the ability to pay."

Secondly, the *Schumacker* doctrine is developed in a context of the impossibility to obtain the deductions in the Member State of residence was due to the combined results of *a de facto* absence of income by an individual in that State with an exclusive power to tax assigned to the State of source regarding the employment income obtained by the individual in that State pursuant to the applicable tax treaty. In the *Marks & Spencer* case, the impossibility to obtain the deduction in the Member State of residence of the subsidiaries was the combined result of a de facto absence of income in those States – which had incurred losses – but where there was no income of the same taxpayer that had been obtained in the State of the parent company. The deduction occurred in a State where the subsidiaries obtained no income and in which there was no legal entitlement to tax that income.

In general, the always somewhere approach seems to be a consequence of the (erroneous) overall approach followed by the Court.[1487] In the case the CJ were to follow a per-country approach it would not be considering the effect whether the losses were to be deducted anywhere or, differently, were to be deducted twice.[1488] The impossibility to deduct the losses is, in fact, a mere consequence of the parallel exercise of taxing powers of each individual Member State similar to the issue of double taxation[1489] that should not engage the competence of the Court[1490]. However, the Court is trying to establish a system in which

---

[1486] See Opinion of AG Kokott, delivered on 23 October 2014, in case C-172/13 *Commission v UK*, para. 53.

[1487] Clearly in this sense, but critical to following a per-country approach see Frans Vanistandael, "Ability to Pay in European Community Law, *EC Tax Review* 2014/3, Kluwer Law International BV, p. 134 referring that from the point of view of the ability to pay principle following a per country approach leads to unsatisfactory results since the taxpayer ability to pay can only be measured by considering the combined elements of the tax systems of the Member States in which the income is (at least potentially) to be taken into account.

[1488] See Michael Lang, "Recent Case Law of the ECJ in Direct Taxation: Trends, Tensions and Contradictions", *EC Tax Review* 3 (2009), p. 110.

[1489] See Peter Wattel, "Nondiscrimination a la Cour: The ECJ's (lack of) comparability analysis in direct tax cases", in in D. Weber (ed.) *Non-discrimination in tax treaties: selected issues from a global perspective* IBFD, Amsterdam (forthcoming).

[1490] As referred by Wattel the outcome of the CJ reasoning is that it gave priority to the "always-somewhere approach" over the subject-to-tax incompatibility. See Terra, Ben Terra & Peter J. Wattel, *European Tax Law*, Fiscale Handboeken no. 10, 2nd edition, Kluwer Detenver (2012), p. 900.

losses are used once, but no more than once, throughout the EU. As has been analysed above, such approach is from a conceptual perspective incorrect and leads the Court to replace the EU legislature, going beyond its powers of negative integration based on the interpretation of the TFEU provisions.[1491]

17.3.1 The special case of currency losses: Deutsche Shell

A subsequent development of the always somewhere approach occurred in case *Deutsche Shell*.[1492] The remarkable feature – and which may be relevant for analysing the scope of the always somewhere approach – of this case relies on the fact that the Court did not feel the need to conduct a comparability test, that is, the difference between domestic and cross-border situations. The Opinion of AG Sharpston was already quite clear in the sense that for a restriction of the freedom of establishment to exist it was not necessary that the German legislation discriminated between domestic and foreign establishments. In Sharpston's Opinion – and although it would be possible to explore a number of hypothetical comparative situations between a German and an Italian establishment[1493]– the decisive point was rather if the German law produced a situation which had a restrictive effect on those aiming to exercise their freedom of establishment.

The Court followed the AG's opinion and did not conduct a comparable analysis. It considered that the German legislation being a measure which is applicable without distinction but which affects particularly cross-border situations – by increasing the economic risks by a company established in one Member State that sets up a body in the other Member State – was a prohibited restriction.

This appeared to represent a possible extension of the application of the always somewhere approach within the context of corporate entities. In *Deutsche Shell,* there was apparently no discrimination[1494] as, in principle, there would be no internal situation on which to perform a comparison since, in principle, a German branch would not be given start-up capital in foreign currency. Still, the mere fact that the loss could not be taken into account

---

[1491] This leads to the conclusion that a per-country approach is more adequate to reach the appropriate equilibrium between the goal of the internal market and the Members States sovereignty as it avoids addressing situations of disparities. See on this M. J. Graetz & A.C. Warren, "Income Tax Discrimination: Still Stuck in the Labyrinth of Impossibility" 121 *Yale Law Journal* (2012), pp. 1163-1164.

[1492] ECJ 28 February 2008, C-293/06 *Deutsche Shell GmbH v Finanzamt für Großunternehmen in Hamburg*.

[1493] See Opinion of AG Sharpston delivered on 8 November 2007, in case C-293/06 *Deutsche Shell GmbH v Finanzamt für Großunternehmen in Hambur*, para. 34.

[1494] In this regard see Sjoerd Douma *Optimization of Tax Sovereignty and Free Movement*, IBFD Doctoral Series no. 21, 2011, pp. 188-190, who cites this case as an example of a non-discriminatory tax obstacle. In particular, Douma relies on the fact that the CJ referred to *CaixaBank* which is an example of a restriction case. Still, Douma makes two caveats in his approach: first the exclusion of the deduction of currency losses was laid down for a measure only applicable in cross-border situations (the provision was in a Double Tax Treaty). And second (an argument which, in my view, favours the interpretation that in fact this case may be also considered as performing a discrimination test) is the fact that there was in fact a discrimination against cross-border activity because the possibility of a currency loss was inextricably linked to cross-border establishment.

elsewhere was considered an obstacle to the fundamental freedoms.[1495] In other words, the CJ felt the right to intervene and compel Germany to deduct the currency losses in order to achieve a higher purpose: to prevent that, eventually, losses could be deducted nowhere.[1496]

It is also possible to read this case in different terms. The fact that a measure such as is under analysis in *Deutsche Shell* is applicable without distinction but affects particularly – rather to say, exclusively – cross-border situations since only in those situations may currency losses arise seems to find support in a treatment caused by the application of the same rules to different situations.[1497] At stake was the impossibility to deduct currency losses (which was a measure applicable without distinction, that is, either in a domestic situation or in a cross-border situation) from a foreign permanent establishment (a different situation from a pure domestic situation where the currency losses in essence could never occur). This is indeed a comparability test. Although typically, in direct taxation the situation is considered to be the same but the applicable measure is different,[1498] one can also find, as in this case, situations dealing with the other way around: same measure, but different situations.[1499] In that regard, the Court's reasoning is clear that:[1500]

> "Discrimination consists in the application of different rules to comparable situations or in the application of the same rule to different situations."

Ultimately the CJ approach is unclear considering the fact that in the reference proceedings the Finanzgericht compared the position of Deutsche Shell (German parent company operating in German marks which had set up an Italian PE operating in Italian lira) with the

---

[1495] In this regard, Wattel states this to be a special case as he considers that it is probably the only direct tax case in which the Court did not see a discrimination but followed a pure obstacle based-approach. See Ben Terra & Peter J. Wattel, *European Tax Law*, Fiscale Handboeken no. 10, 2nd edition, Kluwer Detenver (2012), p. 1039.

[1496] See M. Sanders and A.J.A. Stevens, "De tussenregeling voor valutaresultaten op deelnemingen" *Weekblad vor Fiscaal Recht* 2011/1290.

[1497] See Michael Lang, "Recent Case Law of the ECJ in Direct Taxation: Trends, Tensions and Contradictions", *EC Tax Review* 3 (2009), p. 99.

[1498] Another example of a case where there is application of similar rules to different situations is ECJ 12 September 2002, C-431/01 *Philippe Mertens v Belgian State*, paras. 31-32.

[1499] Another point is, of course, whether indeed there was a discrimination or in fact a mere disparity arising from the dislocation of the tax base: the currency losses arise due to the investment in another Member State in a situation where either of the tax systems of the Member States involved recognised such losses due to the fact that in a pure domestic situation such currency losses purely do not exist. This may be a good example to illustrate a situation where a disparity may occur due to the fact that two tax systems are identical but there is a disadvantage created by the fact that both tax systems are applied alongside one another. See on this D. Weber, "In Search of a (New) Equilibrium Between Tax Sovereignty and the Freedom of Movement within the EC", *Intertax* 34, no. 12 (2006), p. 586. Also considering that Deutsche Shell constituted a disparity rather than a discrimination see M. Sanders and A.J.A. Stevens, "De tussenregeling voor valutaresultaten op deelnemingen" Weekblad *vor Fiscaal Recht* 2011/1290.

[1500] See, among others, ECJ 14 February 1995, C-279/93 *Schumacker* para. 30; ECJ 11 August 1995, Case C-80/94 *Wielockx*, para. 17; ECJ 27 June 1996, C-107/94 *Asscher*, para. 40, ECJ 12 September 2002, Case C-431/01, *Philippe Mertens v Belgian State*, para. 32; or ECJ 14 November 2006, C-513/04 *Mark Kerckhaert and Bernadette Morres v Belgische Staat*, para. 19.

position of a hypothetical German parent company operating in German marks which had set up a German PE operating in Italian lira (or other currency) concluding that the currency losses incurred in such case would have been deductible.[1501] This could allow concluding that the approach in *Deutsche Shell* would be consistent with the traditional different treatment provided to comparable situations.[1502]

In any event it seems that *Deutsche Shell* represented a first[1503] opportunity to claim final losses[1504] outside the context of group taxation regimes.[1505]
The outcome of this case is that Germany was forced to accept the currency losses. The reason why the Court followed this approach is because it considered that the losses did not belong to the PE itself.[1506] Consequently, the Court ruled that the disadvantage did not arise from having an establishment abroad as the loss was attributable to the head office. In the Court's own words, the losses at stake referred to a specific operational factor which is capable of being taken into consideration only by the German tax authorities and which "by their nature, can never be suffered by the permanent establishment.[1507]
The questions that could arise after *Deutsche Shell* are again, essentially related to the interpretation of the CJ ruling as applicable to other situations.[1508] Would it apply also for currency losses arising from participations held in foreign companies rather than branches? Or in every situation or only in some particular cases such as the one dealt with in the case it materialised after the close-down of the permanent establishment?

[1501] See Opinion of AG Sharpston delivered on 8 November 2007, in case C-293/06 *Deutsche Shell GmbH v Finanzamt für Großunternehmen in Hamburg*, para. 30.
[1502] Similarly, see Niels Bammens, *The Principle of Non-Discrimination in International and European Tax Law,* IBFD Doctoral Series no. 24 (2012), p. 959, considering that in *Deutsche Shell*, the CJ engaged in a "classical" situation of giving different treatment to comparable situations
[1503] Later in the *A Oy* case, the CJ confirmed the application of the final losses exception in the case of liquidation following a cross-border merger.
[1504] The decision of the CJ in *Deutsche Shell* can, in fact, be understood as a specific application of the *Marks & Spencer* no possibilities test criterion. The currency loss on the lira was indeed a loss that could not be deducted in Italy for the simple reason that in Italian accounting, such loss was simply invisible. In that sense, the possibility to offset that loss in Italy had been exhausted under the *Marks & Spencer* exception. It is however possible to argue a difference in both judgments: In *Deustche Shell* it was not a matter of exhausting the possibility to use the losses where they were incurred, but in the CJ's view, deducting the losses in the only Member State where they actually belonged. Probably this is the reason why the CJ hardly addressed the *Marks & Spencer* argument in its judgment in *Deutsche Shell*.
[1505] See B.J. Kiekebeld, "Fiscale eenheid niet over de grenzen!", *NFTR* B 2010-18.
[1506] See Werner C. Hasleher, "Cross-Border Loss Relief for Permanent Establishments Under EC Law, *Bulletin for International Taxation* 1 (2010), p. 8.
[1507] See ECJ 28 February 2008, C-293/06 *Deutsche Shell GmbH v Finanzamt für Großunternehmen in Hamburg*, para. 44
[1508] See, *inter alia*, M. Sanders and A.J.A. Stevens, " *Weekblad vor Fiscaal Recht* 140/2011, 6923, pp. 1290-1301, S. Douma, Valutaverlies op deelneming: aftrekbaar!", *NTFR* 2008/2327, A.J.A. Stevens "Het Shell-arrest: een tussenstand", *NTFR-B* 2008/27.

The answer to the *first question* seems to be in the affirmative. There are no apparent grounds to deny the same reasoning of *Deutsche Shell* to participations in companies.[1509] Economically, there are no differences between the two situations. It is true that from a legal perspective, there are differences and that under current case law, the CJ acknowledges such differences by accepting that the Member State of origin may provide for a different treatment between foreign PEs and foreign subsidiaries provided that those entities are not treated differently when compared with purely domestic situations.[1510] However, it is submitted that the same treatment should be granted to foreign PEs and foreign participations as regards currency losses since the differences between subsidiaries and PEs do not appear to be relevant as regards the treatment of this type of losses.

In regard to the *second question,* the answer is also likely to be in the affirmative. In fact looking at either the no possibilities test in *Marks & Spencer* and the facts in *Deutsche Shell* it seems that the need to take into account currency losses would comprise the situations in which the currency result is linked to the shutting down of the permanent establishment or the sale of a participation, that is, in situations where the currency loss is definitive. On the contrary. such deduction would not be possible during the period of ownership – related to currency fluctuations – but which are not final in the similar terms of *Deutsche Shell*, that is, the closing down of the permanent establishment. Those cases could be considered as unrealized currency loses not representing a real economic loss because the economic depreciation of the value of the participation in one year could have an opposite price movement in the following year.[1511] In the end, the correct answer to this question seems to rely on what may be seen as a "real economic loss" as opposed to "economic fluctuations", expressions that were used in the *Deutsche Shell*[1512] judgment, but which the Court did not analyse its exact meaning.

The CJ had the opportunity to analyse currency losses in the case of a participation in a foreign subsidiary: in the *X AB* case,[1513] concerning a Swedish company which held shares in a UK subsidiary. The accounting of the subsidiary was in US Dollars and on different occasions, the Swedish parent company injected capital into the subsidiary. In the context of a reorganization, the Swedish company sold its shares in the subsidiary to another UK

[1509] An example of the application of a foreign currency loss in a foreign subsidiary, see the decision of the Administrative Court of Gothenburg in case *Volvo Bussar AB*, no. 2184-10 of 12 October 2010.

[1510] See, for instance, ECJ 4 June 2009, Joined Cases C-439/07 and C-499/07 *Belgische Staat v KBC Bank BV and Beleggen, Risicokapitaal, Beheer NV v Belgische Staat*, para. 80 or ECJ 6 December 2007, C-298/05 *Columbus Container Services BVBA & Co. V. Finanzamt Bielefeld-Innenestadt*, paras. 39-40.

[1511] Still accepting (at least the possibility) of currency fluctuations being recognized yearly, see M. Sanders and A.J.A. Stevens, " *Weekblad vor Fiscaal Recht* 140/2011, 6923, pp. 1290-1301 and S. Douma, "Valutaverlies op deelneming: aftrekbaar!", *NTFR* 2008/2327

[1512] See ECJ 28 February 2008, C-293/06 *Deutsche Shell GmbH v Finanzamt für Großunternehmen in Hamburg*, paras. 24-25. The CJ stated in para. 25 that in the end:

> "it is for the national court to determine whether the currency fluctuations alleged in the main proceedings led to a currency loss constituting a real economic loss" […]

[1513] CJ, 10 June 2015, C-686/13 *X AB v Skatteverket*.

company. The Swedish parent company realized a currency loss upon the sale of those shares due to the weak value of the Swedish Crown vis-à-vis US Dollars. Under the Swedish corporate tax rules, capital gains upon the sale of shares are exempt from tax and as a consequence, realized capital losses (including inherent currency losses) are not deductible for tax purposes. The Swedish company inquired before the Swedish tax authorities whether the non-deductibility of the foreign currency loss resulting from the evolution of the currency rate between the US Dollars and the Swedish Crown is in breach of EU law. The CJ considered that the Swedish legislation complied with EU law. The relevant point stressed by the Court is that, contrary to Deustche Shell – where in principle currency gains and losses were taken into account in domestic situations - there was no difference in treatment between domestic and cross-border situations as in a pure domestic situation Sweden also did not take into account the results of capital transactions.[1514] This case in my view does not exclude the application of the *Deutsche Shell* doctrine to participations in companies but rather confirms the discrimination approach followed by the CJ in direct tax law and the fact that in *Deutsche Shell* indeed the Court engaged in a comparability test between domestic and cross-border situations.

17.4 Final losses and the no possibilities test

The main finding of the CJ regarding cross-border loss relief is that business losses are to be deducted were there is a direct link with the economic activity, unless those losses are final. Particularly in the *Marks & Spencer* case, the UK was entitled to preclude relief for loses sustained in another Member State, save only in circumstances where those losses could no longer be used by the foreign subsidiary. The conditions formulated by the CJ were that:[1515]

> "[…] The restrictive measure at issue in the main proceedings goes beyond what is necessary to attain the essential part of the objectives pursued where:
>
> – the non-resident has exhausted the possibilities available in its State of residence of having the losses taken into account for the accounting period concerned by the claim for relief and also for previous accounting periods, if necessary by transferring those losses from a third party or by offsetting the losses against the profits made by the subsidiary in previous periods, and
>
> – there is no possibility for the foreign subsidiary's losses to be taken into account in its State of residence for future periods either by the subsidiary itself or by a third party, in particular where the subsidiary has been sold to a third party."

In other words, the CJ accepted the general proposition that the requirements found in the UK group relief restricting such relief to UK group entities was justified as it pursued legitimate objectives. But the Court raised an exception, in which it considered that the restrictions found in the UK legislation went beyond what was necessary to attain those

[1514] CJ 10 June 2015, C-686/13 *X AB v Skatteverket*, paras. 36-39.

[1515] ECJ 13 December 2005, C-446/03 *Marks & Spencer plc v David Halsey (Her Majesty's Inspector of Taxes)*, para. 55.

objectives. This paragraph of the CJ poses obvious interpretational issues. AG Geelhoed in his Opinion in the *ACT Group Litigation* case addressed some comments to it.[1516] It referred to paragraph 55 of *Marks & Spencer* as a "caveat" and advised that the CJ decided that:

> "[…] in exceptional circumstances, where there is absolutely no possibility for subsidiaries resident in another Member State to set off their losses, a Home State must extend domestic group relief to such losses, despite the fact that the Home State does not otherwise exercise any tax jurisdiction over those subsidiaries. […] Whatever the *ratio decidendi* of the caveat may be, I submit that it should be applied extremely restrictively. […]"

Later, both AG Kokott and AG Mengozzi again referred to this paragraph as "the *Marks & Spencer exception*" and called on the CJ to clarify this exception, namely the situations in which it is or not applicable.[1517] The lack of clarity surrounding the interpretation the *Marks & Spencer* no possibilities test is reflected by AG Kokott in her Opinion[1518] in the case *Commission v UK*:

> "42. […] Those conditions, unfortunately, are anything but clear. This has been shown not only by the cases in which the Court has had to deal with their application in specific circumstances. In addition, both Advocate General Geelhoed and Advocate General Mengozzi have stated that they consider the scope and the purpose of the *Marks & Spencer* exception to be unclear. That view is shared not only by me but also by many legal authors, who advocate a very wide range of interpretations of the *Marks & Spencer* exception.
> […]
>
> 44. That regime has, however, proved to be impracticable. It therefore does not protect the interests of the internal market and, as such, is also not a less onerous means of guaranteeing the fiscal sovereignty of Member States as it does not facilitate the activity of cross-border groups but rather constitutes a virtually inexhaustible source of legal disputes between taxpayers and the Member States" tax administrations. There are essentially four reasons for this."

And ultimately led AG Kokott to simply propose the abandonment of the *Marks & Spencer* exception:[1519]

> "50. […] the abandonment of the *Marks & Spencer* exception is the most balanced solution because it preserves that principle of case-law and – in view of the shortcomings of the *Marks & Spencer* exception which have been outlined – no less onerous means are

[1516] See Opinion of Advocate General Geelhoed delivered on 23 February 2006 in case C-374/04 *Test Claimants in Class IV of the ACT Group Litigation v Commissioners of Inland Revenue,* para. 65.
[1517] Opinion of Advocate General Mengozzi delivered on 21 March 2013, in case C-322/11 *K,* paras. 73 and 88.
[1518] Opinion of Advocate General Kokott delivered on 23 October 2014, in case C-172/13 *European Commission v United Kingdom*, paras. 2 and 44.
[1519] See Opinion of Advocate General Kokott delivered on 23 October 2014, in case C-172/13 *European Commission v United Kingdom*, para. 50-53.

available in this regard. Moreover, there are three further reasons for abandoning the *Marks & Spencer* exception.

51. First, it resolves contradictions in relation to the Court's other case-law on tax matters, which provides for a clear demarcation of the fiscal powers of the Member States. In *National Grid Indus* the Court ruled that a Member State may, in the case where a company has transferred its place of management to another Member State, charge tax on the unrealised increases in the value of that company's assets and does not have to grant tax relief in respect of losses suffered after that transfer of its place of management as a result of decreases in the value of its assets. This is so even in the case where the other Member State does not take such losses into account, since regard must be had to the symmetry between the right to tax profits and the possibility of deducting losses. (48) In *X Holding* the Court acknowledged with equal clarity that the Kingdom of the Netherlands could exclude non-resident subsidiaries, fully and without exception, from a group taxation system which also included relief for losses incurred by a subsidiary. (49)

52. Second, this solution respects the requirement of legal certainty, which constitutes a general principle of European Union law. The principle of legal certainty requires, on the one hand, that rules of law be clear and precise and, on the other, that their application be foreseeable by those subject to them. (50) This must also apply to rules of law stemming from the interpretation of the fundamental freedoms by the Court. As the last few years have shown, the *Marks & Spencer* exception does not satisfy the requirement of legal certainty, but makes investment conditions unforeseeable and liable to give rise to disputes.

53. Third, the abandonment of the *Marks & Spencer* exception also does not infringe the ability-to-pay principle, as the Commission claimed at the hearing. The present case concerns the notional treatment of different taxpayers as one and the same taxpayer. However, parent companies and subsidiaries are not jointly taxed, in principle, because they are separate legal entities each with its own ability to pay. At least, the subsidiary does not have access to the assets of the parent company. Accordingly, I consider that a group taxation system is not necessary *a priori* for reasons relating to the ability to pay."

The Court did not follow this position and reaffirmed the *Marks & Spencer* no possibilities test. Therefore, it becomes relevant to discuss the (possible) meaning of final losses and the different issues surrounding its interpretation and implementation.

17.4.1 Meaning of final losses

A first issue deriving from this statement of the CJ concerns the conditions required to claim cross-border loss relief: the requirement of *final losses*. From a plain reading, it appears that losses are considered *"final"* and therefore cross-border compensation should be allowed whenever the following requirements are met:[1520] (i) the losses incurred by the

[1520] See Frederik Boulogne and Nana Sumarada Slavnic, "Cross-Border Restructuring and "Final Losses", *European Taxation* 10 IBFD (2012), p. 489.

subsidiary cannot be carried forward or carried back against its own profits; (ii) the losses incurred by the subsidiary cannot be used by transferring them to a third party; (iii) the losses incurred by the subsidiary cannot be used particularly where the subsidiary has been sold out to a third party (loss carry-over). The no possibilities test, therefore, has two limbs: one limb looks back and the other looks forward. The first limb checks for the relevant accounting period and earlier periods whether the surrendering company has exhausted the opportunities for using the losses. Under the second limb, it appears to be a question of identifying ways in which the loss might be used in the future and then to assess whether that method of using the loss is a "possibility".

An immediate and apparent condition is that the meaning of final loss should be determined according to the rules of the Member State of the transferring company.[1521] The condition of paragraph 55 is that transfers should be permitted only where the use of the losses *locally* has been exhausted. This understanding can already be derived from the solution proposed in the Opinion of AG Maduro (which was adopted by the CJ) who stated that the possibility of cross-border loss relief should be denied[1522] *where the State in which the foreign subsidiaries are established enables those subsidiaries to impute their losses to another person or to carry them forward to other financial years*. The reference to the State enabling the use of losses is clearly the State where the subsidiaries were located. This means that the application of the criteria in paragraph 55 of the CJ's judgment requires an ascertainment of what forms of loss relief are provided for in the State where the company/entity is located and their application to the particular circumstances. This is a logical conclusion. It is apparent that the purpose of the CJ judgment is to ensure that losses which arise one Member State and which are not capable of being relieved should be available for transfer, by way of group relief, to the State of residence of another group company. As a first step, it is clear that such Member State can only relieve losses which arise under its own tax rules. Similarly, in addressing the losses which have not been relieved or in relation to which there is no possibility of relief, also the tax rules of that Member State are the relevant ones. On the contrary, it would be an odd result ff the final losses would be determined in accordance with the rules of the Member State claiming the

[1521] Differently, see Frederik Boulogne and Nana Sumarada Slavnic, "Cross-Border Restructuring and "Final Losses", *European Taxation* 10 IBFD (2012), p. 491 who hold that the existence of a final loss should be determined according to the tax rules of the Member State of the receiving company. They provide an example: if the Member State of the receiving company has a five year carry-forward term for loss compensation, while the Member State of the transferring company has an unlimited carry-forward, a six-year old loss of the subsidiary should still be regarded as a final loss. I respectfully disagree with this understanding. One of the conditions for the existence of final losses in Marks & Spencer is that *there is no possibility for the subsidiary's losses to be taken into account in its State of residence for future periods.* Therefore, it the loss carry-forward is possible there is no final loss under the *Marks & Spencer* no possibilities test. In fact, a different understanding as proposed by both authors would lead precisely to a possible double use of losses (the same loss would be used even that in different moments in two Member States) which was one of the justifications accepted by the CJ.

[1522] Opinion of AG Maduro delivered on 7 April 2005 in case C-446/03 *Marks & Spencer plc v David Halsey (Her Majesty's Inspector of Taxes)*, para. 79.

relief as this could ultimately include some types of losses which were not losses under the tax rules of the Member State of the subsidiaries and thus, could not be relieved at all in that Member State.

A proposal for the circumstances of application of the *Marks & Spencer* exception was made by AG Mengozzi in his Opinion in the *K* case. In general, AG Mengozzi proposed that the application of the *Marks & Spencer* no possibilities test would be dependent on either the unilateral or bilateral (tax treaty) origin of allocation of the powers to tax between Member States. If not considering foreign losses would be a direct consequence of an allocation agreed in a tax treaty, the *Marks & Spencer* exception would not apply. According to the AG:[1523]

> "77. A more convincing explanation in my view would be found in the bilateral or unilateral origins of the objective sought to be attained by the Member State and the restrictive measure adopted to achieve it.
> 78. Thus, if the tax measure arises directly from the allocation of the power to impose tax agreed by the Member States in a convention, no consideration need to be given as to whether the possibilities to take losses into account in the relevant Member State have been exhausted, given that the restriction is the direct consequence of an allocation agreed in the tax convention and not the application of a single tax regime.
>
> 79. This is incidentally also the solution for which the Court opted in paragraphs 47-52 of the judgment in *Krankenheim Ruhesitz am Wannsee-Seniorenbeimstatt* mentioned by the referring court, the outlines of which were set out in the judgment in the *Lidl Belgium* case.
>
> 80. In those cases in which the objective and the restrictive measure conceived in order to rely exclusively on a single tax regime (i.e. unilateral determination), application of the Marks & Spencer exception could, however, be considered.
>
> 81. If such an approach were to be opted for in the case at hand, it would have to be concluded that the refusal, which was based directly on the tax convention between France and Finland, to grant K's request was proportional to the objective of allocating the power to impose tax agreed by the Member States, without any requirement to consider the final nature of the loss incurred by K upon disposal of the immovable property in France."

The proposal made by AG Mengozzi is not compelling as there is nothing in the CJ case law that suggests that the cause of restriction either unilateral or via a tax treaty is relevant for the application of the proportionality test. The reference to the judgments in *Krankenheim-Ruhesitz* and *Lidl Belgium,* in my view, do not support the understanding of the AG. As regards the first judgment and as explained, the fact is that first of all there was no discrimination from the outset concerning the German deduction-recapture rules and the discriminatory tax regime was in fact the Austrian one as it provided a different treatment of the carry-forward of the losses. As concerns *Lidl Belgium,* the CJ did not apply the no

[1523] Opinion of Advocate General Mengozzi delivered on 21 March 2013, in case C-322/11 *K*, paras. 77-81 [translation into English BdS].

possibilities test because it appears that the losses could still be used in Luxembourg and, therefore, there were no final losses under the *Marks & Spencer* conditions.

The conclusion of the CJ is that cross border loss relief is not barred in case of final losses while temporary losses do not need to be taken into account, the fact is that there is no clear indication on the circumstances in which losses should be considered as final. Essentially the following questions arise:

a) Are losses considered final if deduction in the State where they are incurred is banned to limitations of the domestic law of that State? If so, only in case of temporary limitation of loss carry-forward and/or carry-back provisions or also if there is denial of loss deduction in general? These cases refer to final losses due to being *legal* exhaustion.
b) Are losses to be considered final if they can no longer be used due to factual reasons? This in situations of liquidation of a subsidiary or closing the PE's business. These cases refer to final losses due to *factual* exhaustion.

As regards whether the no possibilities test requires *legal exhaustion* and to what extent, it is submitted that it is that the State where the losses were incurred refers to the State which enables the use of such losses, it also means that the use of such losses was originally available in that State. Since cross-border loss relief is only required when the taxpayer has "*exhausted the possibilities available in that State*" that means that the use of the losses was from the outset possible in that same State. Therefore, if there is denial of loss deduction, in general, that situation does not meet the requirements for the finality of losses under the *Marks & Spencer* exception. In other words: if the Member State in which the losses were incurred does not provide for those losses to be taken into account, then the requirement of the no possibilities test which triggers the cross-border loss relief is not met because such possibility to use the losses did not exist and, as a consequence, the losses were never exhausted. This conclusion is evident from the reasoning followed by the Court in the *K* case:[1524]

> "76. However, in a situation such as that in the main proceedings, a taxpayer such as K cannot be regarded, irrespective of the considerations of fact set out by the referring court, to have exhausted the possibilities available in the Member State in which the property is situated of having the losses taken into account.
>
> 77. Since the Member State in which the property is situated does not provide for the possibilities of losses incurred on the sale of the property being taken into account, such possibility has never existed."

[1524] CJ 7 November 2013, C-322/11 *K*, paras. 76-77. Similarly, see Robert Neyt & Steven Peeters, "Balanced Allocation and Coherence: Some thoughts in Light of Argenta and K", *EC Tax Review* 2014/2, Kluwer Law International BV, p. 74, concluding, in my view correctly that the CJ indicates a Member is not required to offset cross-border losses when the possibility of use of those losses never existed in the Member State where they were incurred.

If it is demonstrated that situations in which domestic law does not allow a deduction of losses do not meet the criteria for the finality of the losses, a possible interpretation of the case law of the CJ would be to consider that the no possibilities test did not comprise *loss forfeiture* and therefore that all situations deriving from legal reasons would not constitute final losses. In this regard, AG Kokott formulated the following Opinion[1525] in case *Commission v UK*:

> "[…] it follows from the judgment in *K* that a Member State is not required to take into account losses from a non-resident activity if taking the losses into account at the place where the activity took place is precluded by law. (34) If a non-resident subsidiary is thus prevented from carrying forward a loss under the law of its State of residence, so there is no longer any possibility of future loss relief there, the fundamental freedoms nevertheless do not require the loss to be transferred to the parent company. Here we can see the influence of a line of case-law which developed only after *Marks & Spencer*. The Court summarised this line of case-law for the first time in its judgment in *Krankenheim Ruhesitz am Wannsee-Seniorenheimstatt* to the effect that a Member State is not required to compensate, for the purposes of applying its tax law, negative results arising from "particularities" of tax legislation of another Member State. (35) Admittedly, it has not yet been definitively clarified in which cases a Member State's tax legislation is to be regarded as particular in this regard, for example because it departs from a European Union standard for loss carry-forward which is still to be defined. However, the German Bundesfinanzhof, for example, has already interpreted this case-law as meaning that any legal restrictions on loss carry-forward do not make it impossible to have the losses taken into account elsewhere in the sense of the *Marks & Spencer* exception."

Therefore it has been stated[1526] that legal exhaustion of losses constituted a mere disparity, as ultimately it would derive from situations in which the use of losses was barred due to domestic law limitations.[1527]

Such understanding could be further supported by the fact that the *Marks & Spencer* case only involved companies which had ceased their activities and therefore in which there was no question of loss carry-forward expiry. They could also rely on the outcome of the *Krankenheim Ruhesitz* case which considered that it was not the responsibility for the State of residence to deduct foreign losses which, in that particular case, could not benefit from

---

[1525] See Opinion of AG Kokott delivered on 23 October 2014, in case C-172/73 *European Commission v UK*, para. 39.

[1526] See second Opinion of AG Wattel delivered on 7 July 2010, Hoge Raad no. 43484 bis, case *X Holding BV v Staatssecretaris van Financiën*, para. 4.10, footnote 54.

[1527] In this sense, see Ben Terra & Peter Wattel, *European Tax Law* Fiscale Handboeken no. 10, 2nd edition, Kluwer Detenver (2012), pp. 1028-1029. According to Wattel, if also legal exhaustion of losses would be covered, the effect of the CJ's case law would be that a reduction of the time-limit in the Member State of the subsidiary would increase the risk for the Member State of the parent company of having to absorb foreign losses. Wattel's opinion is that the lack of loss relief availability is caused by the Member State of the subsidiary excluding domestic loss relief and there is no reason for the Member State of the parent company having to compensate for such disadvantages. While from a dogmatic perspective I entirely agree with Wattel's view, I do not read the Court's case law as not including legal exhaustion within the meaning of final losses as explained further below.

the loss-carry forward rules and thus be taken into account in the Member State where they were incurred.[1528]

In addition, it has also been proposed that limiting final losses to factual exhaustion would better fit with the central role played by the justification based on the need to preserve the balanced allocation of the powers to tax between Member States. This reasoning could be based on the fact that a breach of the balanced allocation of the powers to tax could not occur only in the cases where losses had become final due to factual reasons.[1529] Such argument is based on the understanding that, in the opposite situation, that is, in the case the subsidiary has profits, they would have been taxable in the State of residence as direct income of the parent company and taxed therein as either dividends or capital gains. In other words, the liquidation of the subsidiary could lead to the attribution of taxable profits to the parent company to be taxed in this respective State. Therefore, the denial of transfer of losses incurred by a foreign subsidiary would merely be the reverse side of a profitable subsidiary so there would be no disruption of the balanced allocation of the powers to tax in these cases. The same argument would be valid to PEs with the additional argument that losses incurred by PEs can only be allocated to the State where the head office is located.

I believe that this reasoning is not sufficiently convincing to draw a distinction between final losses due to legal exhaustion and factual exhaustion. In fact, if taking into account losses at the level of the parent company upon the liquidation of a foreign subsidiary could be seen as the reverse side of attributing to the parent the liquidation profits, the same rationale could explain taking into account foreign losses which become final due to legal exhaustion as the profits of a foreign subsidiary may be taxed in the parent company upon the distribution of dividends.

[1528] This was precisely the interpretation followed by the Bundesfinanzhof, following *Krakenheim Ruhesitz* which considered that the impossibility to use losses due to legal reasons - expiration of the loss carry-forward period - was not a cause for losses to be considered final under the *Marks & Spencer* no possibilities. In one case - BFH, 9 June 2010, I R 100/07, *IStR* pp. 670-672 - a German resident company had a PE located in France which incurred losses during the year of 1999. According to French tax law, losses could be carried forward for a period of 5 years. The PE did not generate sufficient profits in the subsequent years to be offset against the previously incurred losses. Therefore, the remaining losses could not be used after 2004. In 2005, the taxpayer decided to close down the PE and requested the inclusion of those losses at the level of the head office as he consider them to be final under the *Marks & Spencer* no possibilities test. The BFH considered that the finality of losses may not be made dependent on the legal restrictions of another Member State. If the PE in France could not use the losses because they could no longer be carried forward in that Member State, Germany should not be forced to allow cross-border loss relief at the level of the head office. By making reference to the decision *Krankenheim Ruhesitz* the BFH considered that Germany could not be required to take into account foreign losses due to particularities of legislation of another Member Sate, i.e. the limitation of loss carry-forward of five years.

[1529] See Domenico Pezzela, "Final Losses under EU Tax Law: Proposal for a Better Approach", 54 *European Taxation* 2/3, (IBFD online 2015) who refers to the final profits theory and single allocation theory depending whether the final losses arise, respectively, from a subsidiary or a PE located in the other Member State.

In addition and trying to find support in the CJ's case law this line of reasoning appears to ignore that in *Marks & Spencer,* the Court ruled that the foreign losses – which in the facts of the case were from liquidated subsidiaries – could be deducted at the level of the ultimate parent company, that is, not at the level of direct parent company (which was a holding located in the Netherlands) but at the level of the top parent company located in the UK which, in the opposite situation of profitable subsidiaries, could not tax the earnings deriving from the liquidation.
Finally, this argument also appears to focus exclusively in the lack of symmetry between taxing rights and relief of losses,[1530] but ignores that such reason is insufficient for the Court in order to undermine the balanced allocation of taxing powers between Member States. It is the possibility of jurisdiction shopping that the CJ sees as the main threat to the balanced allocation of the powers to tax. And such possibility is dependent on the local use of the losses either for factual or legal reasons.

A nuanced interpretation of *Krankenheim Ruhesitz* could be that the mere existence of loss carry forward rules would suffice in order to relieve the State of residence from its obligation to take over the foreign losses, irrespective of whether they were applicable in the actual case and that the taxpayer could actually benefitted from those rules.

It is submitted that loss forfeiture also meets the no possibilities test *of Marks & Spencer* and, therefore, should give rise to cross-border loss relief. First of all it has already been subject to analysis of how, from a factual and legal perspective, the situation in *Krankenheim Ruhesitz* differs from the previous case law on cross-border loss relief. The real issue in *Krankenheim Ruhesitz* was the fact that the source State (Austria) treated non-resident taxpayers less favourably than resident taxpayers.[1531] The underlying reason would require the source State to primarily take into account the losses generated in its territory. In addition, nothing in the wording of paragraph 55 of *Marks & Spencer* suggests that it is applicable only to cases of factual exhaustion of the possibilities of loss utilization. This is, in fact, acknowledged by AG Kokott when - while considering (in my view incorrectly due to the reasons stated throughout this section) that cross-border loss relief due to legal exhaustion has been dismissed due to subsequent developments in the CJ's case law – she stated[1532] that:

> "[…] in the case in which the loss cannot by law be taken into account in the State in which the subsidiary is established, the *Marks & Spencer* exception comes into conflict with another line of case-law. Although, for example, the legal exclusion of the loss carry-forward in the State in which the subsidiary is established would necessarily appear to be a clear case for the application of the *Marks & Spencer* exception, this is, as has

[1530] See Domenico Pezzela, "Final Losses under EU Tax Law: Proposal for a Better Approach", 54 *European Taxation* 2/3, (IBFD online 2015).
[1531] Similarly see Michael Lang, "Has the Case Law of the ECJ on Final Losses Reached the End of the Line?", *European Taxation* 12 (2014), p. 534.
[1532] See Opinion of AG Kokott delivered on 23 October 2014, in case C-172/73 *European Commission v UK*, para. 46.

been seen, at variance, in the Court's view, with a principle which has developed in the settled case-law after the judgment in *Marks & Spencer*." [underscore BdS]

On the contrary, from the judgment in *Lidl Belgium* it appears to be clear that the no possibilities test is applicable within the context of legal exhaustion. The CJ observed in *Lidl Belgium* that[1533]:

> "49. As regards the main proceedings, it must be pointed out that Luxembourg tax legislation provides for the possibility of deducting a taxpayer's losses in future tax years for the purposes of calculating the tax base.
>
> 50. As was confirmed at the hearing before the Court, Lidl Belgium has in fact benefited from such an offsetting of the losses incurred by its permanent establishment in 1999 in a subsequent tax year, namely 2003, in which that entity generated profits.
>
> 51. Accordingly, Lidl Belgium has not shown that the conditions laid down in paragraph 55 of the judgment in *Marks & Spencer*, for establishing the situation in which a measure constituting a restriction on the freedom of establishment for the purposes of Article 43 EC goes beyond what is necessary to attain legitimate objectives recognised by Community law, were satisfied." [underscore BdS]

Reading this reasoning a *contrario* would mean that in the case *Lidl Belgium* could not have benefited from the loss carry-forward rules, the conditions of *Marks & Spencer* – the no possibilities test – would have been met. Also by remarking that Lidl Belgium *benefited from such an offsetting of the losses* demonstrates that the taxpayer should be able to have an effective benefit of those rules. This reasoning is in line with the CJ's subsequent ruling in *Commission v UK* where it is held that[1534]:

> " […] It is settled law that losses sustained by a non-resident subsidiary cannot be characterised as definitive, as described in paragraph 55 of the judgment in *Marks & Spencer* (EU:C:2005:763), by dint of the fact that the Member State in which the subsidiary is resident precludes all possibility of losses being carried forward (see judgment in *K*, EU:C:2013:716, paragraphs 75 to 79 and the case-law cited). In such a situation, the Member State in which the parent company is resident may not allow cross-border group relief without thereby infringing Article 49 TFEU."

In this case, the CJ is merely saying that if it is not possible at all to benefit from the loss carry-forward rules, then the conditions of finality of losses under paragraph 55 of *Marks & Spencer* are not met.

In fact, that the mere existence of loss carry forward is insufficient and that the taxpayer should actually benefit from those rules can be traced back to the *AMID* case.[1535] In that case and although Belgium formally provided for loss carry-forward, it effectively led to

---

[1533] See ECJ 15 May 2008, C-414/06 *Lidl Belgium GmbH & Co. KG v Finanzamt Heilbronn*, paras. 49-51.

[1534] See CJ 3 February 2015, Case C-172/13, *European Commission v UK*, para.

[1535] See Isabelle Richelle, "Cross-Border Loss Compensation: State and Critique of the Judicature" in Isabelle Richelle et al. (eds.) *Allocating Taxing Powers within the European Union*, MPI Studies in Tax Law and Public Finance 2 (Springer) 2012, p, 108.

the impossibility to use those losses due to its domestic rules, a situation which the Court considered discriminatory requiring that such loss carry-forward could effectively be enjoyed by the taxpayer. And this case, in turn, is in line with the reasoning of the Court in *Krakenheim Ruhesitz*: in that case the CJ accepted that the conditions for finality of the losses were not met because the taxpayer could not effectively enjoy the loss carry-forward due to a (likely) discriminatory treatment[1536] provided by the State where the PE was located.
In addition and denying the deduction of final losses due to legal reasons may constitute an incentive to cease foreign activities rather that proceeding with carrying on an activity and aiming for future profitability.[1537]

On the other hand, the possibility to offset *liquidation losses* could also be subject to debate. As discussed, the fundamental argument which underlies the reasoning of the case law of the CJ to deny, as a matter of principle, cross-border loss relief, is the possibility of trafficking in losses by allowing the transfer of losses to companies located in Member States with higher rates of taxation where consequently the losses transferred would have a higher value. The main consequence according to the CJ would be that:[1538]

> "[…] to give the option to have their losses taken into account in the Member State in which they are established or in another Member State would significantly jeopardise a balanced allocation of the power to impose taxes between Member States […]"

The criteria laid down in paragraph 55 of *Marks & Spencer* was then designed to prevent that companies could choose the most favourable tax regime in which those losses could be relieved. In other words, it appears that the conditions laid down in that paragraph should be considered fulfilled if the companies have no choice as to the country in which losses are relieved.[1539] This problem lies precisely in the possible interpretation to be given to the term

---

[1536] As suggested by the Court in ECJ 23 October 2008, C-157/07 *Finanzamt für Körperschaften III in Berlin v Krankenheim Ruhesitz am Wannsee-Seniorenheimstatt GmbH*, para. 51

> "Even supposing that the combined effect of taxation in the State where the principal company of the permanent establishment concerned is situated and tax due in the State where that establishment is situated might lead to a restriction of the freedom of establishment, such a restriction is imputable only to the latter of those States."

It was not only in this case that the CJ had suggested that the discriminatory treatment derived from the Austria legislation which effectively precluded the possibility of loss carry-forward in situations in which losses would have been already deducted elsewhere. That such a rule constitutes effective discrimination can be derived from the CJ judgment in case CJ 6 September 2012, C-18/11 *The Commissioners for Her Majesty's Revenue & Customs v Philips Electronics UK Ltd*.

[1537] Similarly, see Yariv Brauner, Ana Paula Dourado & Edoardo Traversa "Ten Years of Marks & Spencer", 43 Intertax 4, *Kluwer Law International BV* (2015), p. 312 when stating precisely that the difference between legal and factual exhaustion could lead to bizarre consequences by favouring the termination of an activity rather than promoting its continuation considering the different tax effects.

[1538] See cases ECJ 13 December 2005, C-446/03 *Marks & Spencer plc v David Halsey (Her Majesty's Inspector of Taxes)*, para. 46; ECJ 18 July 2007, C-231/05 *Oy AA*, para. 49; and CJ 25 February 2010, C-337/08 *X Holding B.V. v Staatssecretaris van Financiën*, paras. 32-33.

[1539] See UK Court of Appeal, *The Commissioners for Her Majesty's Revenue and Customs and Marks and Spencer PLC*, [2011] EWCA Civ 1156, 14 October 2011, para. 15.

option of having the losses taken into account in another Member State. It may represent any choice made that triggers the opportunity to transfer the losses cross-border. And consequently, raises doubts when dealing with situations of factual exhaustion of losses. The liquidation of a company necessarily involves a decision.[1540] Therefore it could be argued, that as soon as a company chooses to go into liquidation that would represent an option to have their losses taken into account in another Member State.[1541] In other words, the argument would be that it would not make a difference between:[1542] (i) exercising a choice as to the country in which to relieve losses, and (ii) exercising a choice as to how to bring about a state of affairs which would afford an opportunity for carrying losses across a national border, that is, going into liquidation would, as a consequence, give the possibility to choose to benefit from cross-border loss relief.

That concern seems to have been the background of the decision followed by AG Kokott in her Opinion in the *A Oy* case. She stated clearly that:[1543]

> "57. […] by ceasing to exist as a legal person, the subsidiary would lose any possibility of the losses being taken into account in the Swedish taxation procedure. However, that would merely be the consequence of the merger decision. The merger itself arose from a free decision of the parent company. If the fact that there was no possibility of the losses being taken into account were regarded only as a consequence of the merger decision, any procedural act of the subsidiary company in the Swedish taxation procedure, such as a deliberately belated application for an accumulated loss to be taken into account or a waiver of a claim, could justify the exclusion of the possibility of using the losses within the meaning of the *Marks & Spencer* judgment.
>
> 58. Therefore, by deciding on a merger with its subsidiary, the taxable company would itself forgo the possibility of using the loss in Sweden. The Court has pointed out on numerous occasions that a taxable company cannot be allowed to choose freely the tax scheme applicable to the losses of its subsidiaries and the place where those losses are taken into account. […] in the present case there would be such a free choice if the Swedish subsidiary's losses had to be taken into account for the purposes of Finnish taxation after a merger."

And this was emphasized in Kokott's subsequent Opinion in *Commission v UK* case when stating that:[1544]

> "[…] the impossibility of loss relief elsewhere can be created arbitrarily by the taxpayer. This possibility, however, runs counter to the case-law also cited by the United Kingdom,

[1540] The same reasoning being applicable in the case of PEs.

[1541] These were arguments brought forward by the UK revenue in UK Court of Appeal, *The Commissioners for Her Majesty's Revenue and Customs and Marks and Spencer PLC*, [2011] EWCA Civ 1156, 14 October 2011, para. 27. See on this also, Frederik Boulogne and Nana Sumarada Slavnic, "Cross-Border Restructuring and "Final Losses", *European Taxation* 10 IBFD (2012), p. 489.

[1542] See UK Court of Appeal, *The Commissioners for Her Majesty's Revenue and Customs and Marks and Spencer PLC*, [2011] EWCA Civ 1156, 14 October 2011, para. 28.

[1543] See AG Kokott's Opinion in case C-123/11 *A Oy*, delivered on 19 July 2012, paras. 57-58.

[1544] See Opinion of AG Kokott delivered on 23 October 2014, in case C-172/73 *European Commission v UK*, para. 39.

> according to which a taxpayer does not have the freedom to choose the tax scheme to which he is subject. (43) In *Marks & Spencer* the Court had thus already also given the Member States the option to prevent arrangements to evade taxes. (44) However, it is very difficult to clarify in a specific case when, for example, a subsidiary is wound up for tax reasons and when it is not."

While these arguments seem logical, I do not believe that a choice of going into liquidation is necessarily equivalent to a choice of a company to traffic its losses which was the reason underlying the danger of jeopardizing the balanced allocation of taxing rights between Member States. This starts from the incorrect premise that a company's liquidation is frequently tax motivated and therefore, should in all cases be rejected. The issue of loss trafficking concern is very much linked to the issue of abuse and it involves, essentially or solely, tax reasons. A decision of liquidation of a company involves, by nature, business reasons. Therefore, tax and business/commercial reasons should not be treated in a similar manner. In other words, the reason why a company is liquidated is because it has decided to cease trading and that does not represent the exercise of an option to choose where to seek relief for the losses that had been incurred.[1545] Therefore, the CJ confirmed in the case *A Oy*[1546] that the application of the *Marks & Spencer* no possibilities test should be met in situations involving liquidations.[1547] This means that a taxpayer may in fact take legitimate steps in order for the conditions laid down in paragraph 55 – the finality of losses – to be met. The purpose of those conditions is to limit cross-border loss relief to circumstances in which there was a risk to the balanced allocation of the powers to tax,[1548] which is the situation when a taxpayer has no possibility to choose the Member State in which to relieve the losses as there is no opportunity to use the losses locally. This situation is not to be confused with situations such as that dealt with in *A Oy* in which the choice is between obtaining relief or not obtaining relief at all. The exercise of a free choice in undertaking

[1545] See *Commissioners for Her Majesty's Revenue and Customs (Respondent) v Marks and Spencer plc,* 22 May 2013, (2013) UKSC 30, para. 32.

[1546] In a certain way, cross-border mergers are more susceptible to abuse as, in theory, it is possible to transfer the losses to any company which can be a receiving company within a merger. In that regard, one may wonder whether the possibility of loss trafficking could constitute a justification to deny the cross-border transfer of losses as a result of a merger. See Harm van den Broek, *Cross-Border Mergers within the EU: Proposals to Remove the Remaining Tax Obstacles*, Wolf Legal Publishers (2011), pp. 392-393. From the *A Oy* case it seems that the offset cross-border losses arising from the liquidation losses may always be possible based on a breach of the freedom of establishment. In any event, this case involves an upstream merger and therefore, the outcome between a cross-border merger and cross-border group taxation would not differ in terms of the company claiming for the loss relief. It remains open whether a different outcome would be followed by the CJ in the case of a different cross-border merger scenario.

[1547] The same reasoning applies to the cessation of activities of PEs. An example may be found in the judgement of the BFH – BFH, 9 June 2010, I R 107/09 – which dealt with a German company with two PEs located in France. Both PEs incurred losses between 1998 to 2001. In 2001, the taxpayer decided to close down both PEs in France and requested entitlement to cross-border loss relief in Germany at the level of the head office. In this case, the Court ruled in favour of the taxpayer considering that the losses were final and therefore, should be offset Germany as the State of residence of the head office.

[1548] See also P. Farmer and N. Hine, "A Oy: CJ confirms the Marks & Spencer no possibilities test and applies the case law in the context of a merger", in *H&I* 2013/5.6.

the merger, with the consequence of liquidation of the company, does not preclude the loss relief. Therefore, the principle that a taxpayer should not be able to choose the country in which to relieve the losses does not extend to steps that pose no threat to an entitlement to cross-border relief. In its judgment in the *A Oy* case, it appears that the CJ accepts that steps which are taken in order to demonstrate that the conditions of the no possibilities test are met do not represent a threat to the balanced allocation of the powers to tax. It is correct that it may be difficult to discern in particular cases when a company is liquidated for tax reasons or not. Eventual abuse in these situations, however, should not be a reason to reject, from the outset, the possibility of cross-border loss relief.[1549] The CJ doctrine in this regard will require a case-by-case analysis to check whether the liquidation is predominantly or solely tax motivated. It should be stressed that in *Commission v UK* the Court did not follow AG Kokott's Opinion and reaffirmed the possibility of cross-border loss relief in situations in which a company is put into liquidation.

Another feature is whether the no possibilities test has to be satisfied in relation to the whole of the subsidiary's losses for the accounting period – *an all or nothing test* - or whether it applies to each euro (or other local currency) of loss separately - *pro rata test*. In other words, whether the mere possibility to use part of the losses would disqualify all the losses from relief. The CJ appears to have adopted an all or nothing test when concluding that:[1550]

> "[…] it should be borne in mind that losses sustained by a non-resident subsidiary may be characterised as definitive, as described in paragraph 55 of the judgment in *Marks & Spencer* (EU:C:2005:763), only if that subsidiary no longer has <u>any income</u> in its Member State of residence. So long as that subsidiary continues to be in receipt of even minimal income, there is a possibility that the losses sustained may yet be offset by future profits

[1549] This was actually the reasoning followed by the Bundesfinanzhof in its decision in case I R 48/11 of 5 February 2014. The case deals with a German company with a PE located in Belgium. The German head office sold assets to a Belgium resident company recognizing losses from the sale as well as operating losses of the PE from that year. Accordingly, it claimed a deduction for those losses in Germany, considering the fact that they could no longer be used in Belgium. Such request was rejected by the local tax authorities based on application of the Double Tax Treaty concluded between Germany and Belgium which provides for an exemption of taxation of foreign PE income in Germany. The BFH confirmed that the symmetry principle under tax treaties is subject to the freedom of establishment in respect of final losses which therefore constitutes an exception to the possibility to use foreign losses. The BFH confirmed that a sale or closing of a business or a sale of a corporation constitute circumstances that give rise to final losses. While it is true that selling a PE may involve an artificial creation of foreign loss deduction, that constitutes an exception and should be analyzed based on abuse rules. In other words, typically the sale or closure of a business is motivated by sound economic and business reasons especially when the business is continuously loss making. An interesting aspect of the BFH decision was the fact that this Court confirmed that the possibility to use losses should be analyzed based on actual circumstances and not in abstract. The mere possibility to use losses in the future due to recommencing activity in the other State does not preclude the losses from being final. In this sense, hypothetical scenarios do not affect the finality of the losses. See for a description of this case, Christian Kahlenberg, "Recognition of Final Losses of Permanent Establishments", 54 *European Taxation* 9 IBFD (2014), pp. 414-417.

[1550] See CJ 3 February 2015, C-172/73 *European Commission v UK*, para. 36.

made in the Member State in which it is resident (see judgment in *A*, EU:C:2013:84, paragraphs 53 and 54)." [underscore BdS]

In my view, an all or nothing test does not seem to be the correct approach. The inclusion of the no possibilities test was precisely to allow that provisions that constitute justified limitations to domestic loss relief do not go beyond that which is necessary to attain its objectives . It is arguably disproportional to refuse cross-border loss relief for the part of the losses that, viewed in itself, fulfil the no possibilities test, just because another part of the losses was able to be used. As held by the CJ in other case law,[1551] which can be transposed to this situation, a tax measure in order not to be considered disproportionate should be confined to the amount that pursues the legitimate objectives of the (justified) restriction. In fact, if it is accepted that the assessment of the conditions of paragraph 55 involve a question based on the factual position of the subsidiaries which suffered the losses, the all or nothing approach constitutes a contradiction of such assessment.

An interesting issue regarding the no possibilities test involves dealing with the *concurrence between domestic and foreign losses*. A first situation may involve a case where *domestic non-terminal losses and foreign terminal* losses are simultaneously incurred. In principle, it is submitted that in such scenario, prior exhaustion of domestic non-terminal losses is not required. The outcome of *Marks & Spencer* did not require that cross-border loss relief was subject to first eliminating any available losses in the UK. In fact, the CJ reasoning appears to have been guided by the need to ensure that foreign final losses were taken into account once (and only once). In that case, what is relevant is that those losses are to be "imported" and treated in a manner similar to domestic losses. It is therefore not necessary that first all the non-terminal losses of all the group companies in the same Member State are used prior to the cross-border loss relief.
In a second situation of concurrence between domestic terminal losses and foreign terminal losses, the choice of which losses are used first becomes irrelevant. In such a given period, the loss of tax revenue for the Member State claiming the loss relief is determined by the total amount of such losses and the total of profits which can be offset by those losses. Therefore, the end result will always be the same, no matter which losses are first offset (domestic or foreign): the Member State will lose tax revenue based on the difference between the total amount of (both foreign and/or domestic losses) final losses incurred and the total amount of profits generated in such Member State. From the perspective of the Member State granting the loss relief, it is always irrelevant whether the losses incurred in its jurisdiction or the losses incurred in the jurisdiction of the Member State of the company claiming the relief are used first. As explained, there is no impact on the tax base of this Member State corresponding to the amount of losses transferred/used.

[1551] See cases CJ 5 July 2012, C-318/10 *Société d'investissement pour l'agriculture tropicale (SIAT) v État belge*, para. 52; and CJ 21 January 2010, C-311/08 *Société de Gestion Industrielle (SGI) v Belgian State*, para. 72.

As regards the *burden of proof* for demonstrating that the conditions for applying the *Marks & Spencer* exception are met and for the entitlement to cross border loss relief the reference in paragraph 55 of *possibilities available* meant *recognised possibilities legally available given the objective facts of the company's situation at the relevant time* is irrelevant. The inclusion of the word *recognised* relates to the *burden of proof* and puts on the claimant of cross-border loss relief the burden of proving that there are no possibilities of obtaining tax relief for losses in the Member States where those losses were incurred.[1552] This could be derived from the following statement of the Court in the *Marks & Spencer* case:[1553]

> " Where, in one Member State, the resident parent company demonstrates to the tax authorities that those conditions are fulfilled, it is contrary to Articles 43 EC and 48 EC to preclude the possibility for the parent company to deduct from its taxable profits in that Member State the losses incurred by its non-resident subsidiary."

The use of the word *demonstrate* places the burden of proving that the *Marks & Spencer* conditions are satisfied on the entity claiming cross-border loss relief. While to prove a negative fact - the impossibility to use the losses in the Member State where they were incurred - is always difficult, this burden is subject to the EU law principle of effectiveness according to which, the procedures in a Member State should not render practically impossible or excessively difficult the exercise of rights conferred by EU law. This should mean that the entity claiming the relief must provide appropriate evidence - through reasonable means[1554] - to support that the losses can no longer be used in the other Member State.

17.4.2 Rules applicable to the calculation of the losses

One of the most relevant issues is determining *which law should be applicable to the calculation of the losses*. Essentially there are three possibilities: (i) re-calculation in accordance with the rules of the Member State that takes over final losses; (ii) acceptance of the calculation in accordance with the rules of the Member State where those losses were incurred; and (iii) deduction of losses in the amount of the lower of those calculation rules.[1555]

[1552] This was, quite correctly in my view, the conclusion reached by the UK Courts when interpreting the *Marks & Spencer* judgment. See in this regard, UK High Court of Justice, *Marks and Spencer PLC* and David Halsey (HM Inspector of Taxes) [2006] EWCH 811 (Ch), 10 April 2006, para. 33.

[1553] See ECJ 13 December 2005, C-446/03, *Marks & Spencer plc v David Halsey (Her Majesty's Inspector of Taxes)*, para. 56.

[1554] This can be made for instance with some form of certificate, confirmation or notification from the local tax authorities that the relevant losses cannot be taken into account in the accounting period in which they were incurred and that there is no possibility of carry back or carry forward.

[1555] This was, for instance, the approach followed in Sweden with the revised legislation which allows certain cross-border group contributions to foreign subsidiaries. At the level of the Swedish parent company, the maximum amount of deductible contribution corresponds to the loss of the foreign subsidiary in the lowest of the amounts of the laws of either its State of residence or Sweden. See Matthias Dahlberg, 'Sweden: Lawmakers Considering Cross-Border Group Contributions", *Tax Notes International*, 3 May 2010, p. 385.

The difference in the calculation rules of Member States can lead to different results, both in terms of the categories of the losses but also regarding timing differences. In fact, there may be permanent differences between losses calculated under the different rules of either Member States - with the loss amount being higher in accordance with the rules of one or the other Member State[1556]- or merely timing differences owing to the years in which profits and losses are recognized under the two different sets of rules.
From the outset in *Marks & Spencer* there was no need to address this issue before the CJ as it had already been agreed in the main proceedings that the losses would be computed on the basis of UK standards.[1557] But the question remains, which rules should be followed?

Regarding the determination of the legislation applicable to the *categories/amount of losses*, the simple acceptance of the results calculated under the rules of the Member State where the losses were incurred does not seem to be the proper solution. The problem arises out of the need to ensure that the losses of a subsidiary in one Member State are not subject to group relief to a greater extent than that which would be available had that subsidiary been resident in the Member State in which the relief is claimed. A different solution would lead to force a Member State to grant an excessive relief as compared to a pure domestic situation, thus overriding the principle of fiscal sovereignty. And it would go further than necessary to give effect to the no-possibilities test.[1558]

Conversely one could instead apply the rules of the Member State which is claiming the benefit of cross-border relief.[1559] This seems to be the natural answer from an EU law perspective since in a domestic situation, the loss would indeed be calculated according to

[1556] An example to illustrate this issue: assume a subsidiary has incurred into a loss of € 1,000. If the same loss re-calculated under the rules of the receiving company would be € 1,200, should that higher amount be deducted? Or in the opposite situation in which the re-calculated loss is a lower amount of € 800, should that lower amount be considered or instead, the best result which is now € 1,000 in accordance with the rules of the Member State of the subsidiary? This may result also from the fact that a particular item of expenditure is taxable in one system and not in the other.
[1557] See ECJ 13 December 2005, C-446/03 *Marks & Spencer plc v David Halsey (Her Majesty's Inspector of Taxes)*, para. 22.
[1558] See First Tier Tribunal *Marks and Spencer PLC and The Commissioners for Her Majesty's Revenue and Customs* 23 February 2009, para. 51.
[1559] This was actually the approach followed in the UK pursuant to the *Marks & Spencer* case. This issue about the correct method of calculating the losses to be surrendered by the UK parent company of *Marks & Spencer* involved essentially whether the losses should be calculated: (a) under the rules of a single country and, if so, whether it should be a local country or the UK ; (b) by converting to UK rules the unutilised losses as determined by local rules: or (c) by taking each year the lower of the amounts calculated and utilised either under local rules or after the conversion to UK rules. The UK Courts considered that the conversion to the UK rules constituted the most equitable approach as it would ensure that losses sustained by the foreign subsidiaries would be offset against UK profits in the same way as those losses were sustained by a UK resident subsidiary. See UK Supreme Court *Commissioners for Her Majesty's Revenue and Customs v Marks and Spencer PLC,* 19 February 2014 [2014] UKSC 11, paras. 52-53.

domestic standards,[1560] and was precisely the reply given by AG Kokott to the second question raised in the *A Oy* case. In her Opinion, AG Kokott considered that the losses must, as a rule, be calculated according to the tax law of the receiving company's State of residence.[1561] In that way, the calculation of the losses would lead to equal treatment between situations involving a single Member State and cross-border situations thus removing the restriction to the freedom of establishment, which arises due to the differences in treatment between both situations. AG Kokott rejected the position of the Commission, which sustained that, the maximum loss to be taken into account should be the (lower) amount calculated according to the tax law of the State of residence of the transferring company. In that case, a restriction of the freedom of establishment would continue to exist because the loss taken into account in cross-border mergers would be less than in purely domestic mergers. While AG Kokott accepted that the calculation should, *in principle*, be made in accordance with the rules of the Member State of the receiving company, she still recognized that there may be some limitations to that rule, *depending on the cause of a loss calculation differing from the operating result*. Kokott stated that an exception could apply in the case the losses were increased in the Member State of the receiving company due to the application of tax incentives ("fiscal promotion measures") such as higher depreciation. In those cases, it is possible for the Member State of the receiving company to limit the application of such measures to only domestic activities and thus not take those rules into account when re-calculating the losses of the transferring company.

The answer of the CJ to this question was less clear, although it can be derived that it followed a similar approach of calculating the rules in accordance with the rule of the Member State of the receiving company. The Court started by observing that the freedom of establishment does not prescribe the application of any particular law for the calculation of the losses. Nevertheless, it recalled that EU law precludes adopting methods that may constitute an obstacle to the freedom of establishment. Therefore, it concluded[1562] that:

> "59. […] It follows that, in principle, the calculation must not lead to unequal treatment compared with the calculation which would have been made in a similar case for the taking over of the losses of a resident subsidiary.
> 60. That question cannot, however, be addressed in an abstract and hypothetical manner, but must be analysed where necessary on a case-by-case basis."

This reasoning of the Court is not surprising and it could already been derived from the *de Groot* case.[1563] Probably aware of the above differences, the CJ considered the need to perform an analysis on a case-by-case basis.

[1560] This is precisely the view shared by Wattel who, based on the interpretation of *Marks & Spencer*, considers that national treatment would lead to the calculation under the laws of the parent company. Wattel is of the view, however, that the Court's reasoning appears to point to the calculation on the basis of the rules of the Member State of the subsidiary. See Ben Terra & Peter J. Wattel, *European Tax Law* 6th edition (2012), p. 1028.

[1561] See the Opinion of AG Kokott in case C-123/11 *A Oy*, delivered on 19 July 2012, para. 73.

[1562] See CJ 21 February 2013, C-123/11 *A Oy*, para. 59.

[1563] See ECJ 12 December 2002, C-385/00 *F.W.L. de Groot v Staatssecretaris van Financien*, para. 115, where the Court states:

The answers so far addressed by the existing case law are still not clear, in my view, as to whether the application of the domestic rules of the Member State where the relief is claimed should be applied *de per se* or with a limitation to the amount of foreign incurred losses. I believe that the second solution is the appropriate one. The requirement under EU law is to remove an infringement caused by the impossibility to deduct in one Member State existing losses incurred in another Member State, i.e. to the extent that they are not utilised and cannot be utilised locally.[1564] The purpose of this exception is that a group relief claim reflects an *actual* loss in the foreign subsidiary. This means that if the amount of the loss is higher in the Member State claiming the relief, that does not correspond to an actual and effective loss incurred by the foreign subsidiary.[1565] For that purpose, the preferred solution would be to apply the rules of the Member State of the company claiming the relief setting a cap on the amount of the foreign incurred losses which can be used in that Member State. This means that:[1566]

i. where one category of losses is recognised under the laws of the Member State of the subsidiary but not under the laws of the Member State where the company claiming cross-border loss relief is located, those losses should not be allowed to be used in the Member State of the claiming company. Therefore, if the losses calculated under the rules of the Member State claiming the relief are greater that those calculated on a local basis, the group relief in aggregate should not exceed the total losses calculated on a local basis. In other words, if local calculation results in a lesser loss, the group relief claim is restricted to the actual loss of the subsidiary.
ii. If the local calculation (where losses were initially incurred) results in a greater loss, the group relief claim is restricted to the amount calculated under the tax rules of the Member State claiming the relief.

A second point concerns the *timing issues.*[1567] This occurs when the laws of the Member State of the subsidiary recognises losses for tax purposes in accounting periods which are

---

"[…] Community law contains no specific requirement with regard to the way in which the State of residence must take into account the personal and family circumstances of a worker who, during a particular tax year, received income in that State and in another Member State, except that the conditions governing the way in which the State of residence takes those circumstances into account must not constitute discrimination, either direct or indirect, on grounds of nationality, or an obstacle to the exercise of a fundamental freedom guaranteed by the Treaty."[Underscore BdS].

[1564] See Upper Tribunal Tax and Chancery Chamber *The Commissioners for Her Majesty's Revenue and Customs and Marks and Spencer PLC*, [2010] UKUT 213 (TCC), 1 March 2010, para. 201.

[1565] Again, the underlying reasoning is that it is under local law that one determines whether any particular amount of loss as so computed can or cannot be used and therefore, corresponds to an effective loss also for the purposes of the application of the *Marks & Spencer* exception.

[1566] See Upper Tribunal Tax and Chancery Chamber *The Commissioners for Her Majesty's Revenue and Customs and Marks and Spencer PLC*, [2010] UKUT 213 (TCC), 1 March 2010, para. 216.

[1567] A further question regarding timing issue may be the tax year in which the final losses must be taken into account, which are the options: (i) losses should be taken into account retroactively in the tax year in which they are initially incurred; or (ii) losses should be taken into account in the tax year in which they became

different from those periods which they would recognise under the laws of the Member State of the company claiming the loss relief.[1568]

It is suggested that in the case of timing issues, the applicable laws should be those of the Member State claiming the relief. The effect of the application of the rules of such Member State is that losses incurred in one year under the tax rules of the Member State of the subsidiary may be shifted to a different accounting year.[1569] Such shift is a result of mere differences in the tax laws of the different Member States. Nevertheless is entirely compliant with the purpose of the internal market. By converting foreign losses into the

---

final. In favour of the first option, one can argue that the ability-to-pay principle claims that losses are deductible at the earliest point in time as well as the equal treatment of comparable domestic situations. Differently and in favour of option two, one can argue that the principle of symmetry of treatment between profits and losses (profits are not taxed and consequently losses are not taken into account) does not impose that any of the principles referred to as regards the first option prevails. In addition, and as for practical reasons cross-border loss relief, use should only occur in the year in which the losses became final. This discussion was brought up by the German courts and ultimately, the second option was followed by the Bundesfinanzhof in its judgement of 9 June 2010, Case I R 107/09. See also, Andreas Perdelwitz, "Recent Developments on the Deductibility of Foreign Permanent Establishment Losses in Germany", 51 *European Taxation* 1 IBFD (2011), p. 32.

[1568] For example, capital expenditure in some tax systems is deductible in the same way as depreciation of a capital asset, i.e. over the life time of the asset. In other tax systems, it is deductible under a system of capital allowances, which accelerates the deduction to a greater extent than the actual depreciation for accounting purposes.

[1569] One can wonder about additional possible problems deriving from timing issues. In a situation where the State of the parent company/head office provides for an unlimited carry-forward of the losses while the State of the subsidiary/PE provides for a limited carry-forward period, the situation is simpler as to the deduction of the foreign losses. But problems may arise in the case where both States provide for a time limit for loss carry-forward. The CJ's reasoning determines that the finality of the losses is determined in accordance with the rules of the State where those losses were incurred. But must the State which imports the foreign losses totally disregard its own legislation and time limitations? If so, within what limits? An example helps to illustrate the problem. Assuming a situation in which the State of the parent company has a loss-carry forward period of 3 years while the time limit in the State of the subsidiary is 5 years. Is the State of the parent company still obliged to take into account the foreign losses? The losses. first of all, are final based on the legislation of the State of the subsidiary. But must the State of the parent company take those foreign losses into account considering that it provides for a shorter loss carry forward period and, therefore, they could not be used in a purely domestic situation? It is difficult to provide a clear answer. On the one hand, it can be said that only from the moment that the losses became final in the State of the subsidiary are they of possible use in the State of the parent company. Therefore, the calculation of the time limit period of 3 years will start running as from the moment they can be used in that State. On the other, true, this does lead to a situation of reverse discrimination where foreign losses would benefit from a longer loss-carry forward period (8 years) than losses incurred domestically (3 years). This problem is addressed by Wattel who considers that the Member State of the parent company/head office is not required to provide relief for foreign incurred losses of the subsidiary/PE which become definitive due to expiry of legal exhaustion if the Member State of the parent company has a relief time-limit for comparable domestic losses which has also expired. See Ben Terra & Peter Wattel, Fiscale Handboeken no. 10, 2nd edition, Kluwer Detenver (2012), p. 1028. I agree with this approach. The CJ's reasoning is based on a discriminatory analysis where it compares domestic with cross-border situations. Therefore, if the Member State of the parent company does not provide relief for domestically generated losses, it should not have to take into account foreign generated losses that would not be otherwise available in a pure domestic scenario.

rules of the domestic losses, this allows the company claiming the loss relief to be able to deduct the losses under the same conditions as if they had been sustained by a subsidiary resident in the same Member State. The re-allocation of the losses to a different period is merely the result of the necessary application of the amount/categories of losses under the tax rules of the Member State claiming the cross-border loss relief. When the preliminary step of moving from the identification of local losses computed under local rules to the identification of their equivalent under the rules of the Member State claiming the relief, one also moves from the local time recognition to the other Member State's timing of recognition.[1570]

In general, this leads to a complex solution which aims at reconciling the starting point of identifying the local losses and the no possibilities test computed under local rules to identifying their equivalent under the rules of the company claiming the relief for the purposes of allowing cross-border losses.

An additional question when dealing with timing issues is what is the *moment as to the demonstration where the losses meet the conditions of the no-possibilities test*. Again, this was a topic subject to debate in the UK Courts as to how to implement the *Marks & Spencer* judgment following the ruling of the CJ in this case. The question to be resolved was whether the facts by reference to which the conditions set out in paragraph 55 of *the Marks & Spencer* had to be satisfied were those which existed or could be foreseen at the end of the accounting period in which the losses arose, or those which existed at the date of the claim. The UK Supreme Court considered[1571] that the relevant time was the date of the claim as the end of the accounting period would rule out many situations, since in several cases there would be some possibility of relief for the losses at the end of an accounting period. The UK Court considered that the balanced allocation of the powers to tax did not require to be supported by an approach which restricts the company to that extent. Therefore, the company claiming loss relief should be able to demonstrate, on the basis of the circumstances known at the date when it makes the claim, that there has been no possibility of the losses in question being used in the Member State of the surrendering company. The CJ, however, followed a different approach[1572] by considering that, in principle, the UK rules that implemented the *Marks & Spencer* exception by stating that the time of the claim has to be made at the time immediately after the end of the accounting period in which the losses were sustained, do not contravene the freedom of establishment. This opinion of the CJ is rather unclear and also as to why it accepted – departing from the solution proposed by the UK Supreme Court - that, in principle, the proof has to be demonstrated immediately after the end of the accounting period. This solution gives rise to

[1570] See UK Court of Appeal, *The Commissioners for Her Majesty's Revenue and Customs and Marks and Spencer PLC*, [2011] EWCA Civ 1156, 14 October 2011, para. 87.
[1571] See UK Supreme Court *Commissioners for Her Majesty's Revenue and Customs v Marks and Spencer PLC,* 19 February 2014 [2014] UKSC 11, para. 18.
[1572] See CJ 3 February 2015, C-172/73 *European Commission v UK*, paras. 38-40.

a considerable restriction of the possibility to use foreign losses considering the difficulties in determining, in the moment immediately after the end of the accounting period, that it will not be able to offset the generated losses with future profits.[1573]

17.4.3 Non-discriminatory tax rules

Another issue concerns possible situations involving *non-discriminatory tax obstacles* and whether the no possibilities test is applicable in these cases. A good example may be liquidation losses. Both *Marks & Spencer* and *A Oy* cases confirmed that losses arising from a liquidation meet the no possibilities test criteria. Assuming that a particular Member State does not allow a parent company to take into account liquidation losses of its domestic subsidiaries, would it still be forced to allow a deduction of foreign subsidiaries?[1574] From the outset there is no difference in treatment between a domestic and a cross-border situation but the question is whether the freedom of establishment would require the parent company to allow the cross-border loss relief due to the finality of those losses. It has been argued[1575] that the impossibility of a parent company to take into account a final loss would constitute an obstacle to the freedom of establishment and, therefore, such deduction should be allowed. The argument would essentially rely on the fact that a breach of the fundamental freedoms is not necessarily dependent on the existence of a discriminatory treatment as the CJ wording also refers to *abolition of any restriction*. I do not agree with this reasoning. The fact is that irrespective of the wording used, the fact is that the CJ, in the field of direct taxation, always uses a discrimination approach by essentially comparing domestic with cross-border treatment. And it would go beyond settled case law and the interpretation of the fundamental freedoms if the Court would require one Member State to grant cross border loss relief irrespective of whether the legislation of that Member State would grant a similar deduction in a comparable domestic situation.[1576]

I

n fact, the principles that emerge from the Court's reasoning are precisely that the losses from non-resident subsidiaries must be taken into account in the Member State of the parent company only when such possibility is available in the case of losses incurred by resident

[1573] Axel Cordewener, "Cross-Border Compensation of "Final Losses" for Tax Purposes – The Drama Continues…" 22 *Maastricht Journal of International and Comparative Law* 3, (2015), pp. 425-426.

[1574] An example may be conceived within the context of a group taxation regime in the case where under the applicable domestic law, the losses of that subsidiary are lost because in the situation where the company leaves a group due to its liquidation, the losses can no longer be carried forward to the parent group member (or any other entity of the group). See Francisco Sousa da Câmara, "How will the Marks & Spencer Ruling Affect Portugal?", *Tax Notes International* (15 May 2006), pp. 619–620.

[1575] See Frederik Boulogne and Nana Sumrada Slavnic "Cross Border Restructuring and "Final Losses", *European Taxation* 10 IBFD (2012), p. 492.

[1576] See Michael Lang, "Recent Case Law of the ECJ in Direct Taxation: Trends, Tensions, and Contradictions", *EC Tax Review* 3 (2009), p. 110.

subsidiaries[1577] and those losses can no longer be used by those subsidiaries. This reasoning is confirmed by the CJ decision in the *X AB* case. The Court's conclusion in this judgment[1578] was that the Swedish legislation did not breach the freedom of establishment because there was no unfavourable treatment between domestic and cross-border situations. In other words, Sweden was not forced to allow the deduction of cross-border (currency) losses because the legislation did not provide for any deduction of capital losses irrespective of whether the shares were held in a company established in Sweden or in another Member State. Clearly, this case demonstrates that the Court follows a discriminatory approach and does not require Member States to deduct foreign losses whenever such possibility is not granted in the first place in domestic situations. Conceptually, this approach is entirely correct, as the Treaty freedoms do not require better treatment than that provided in purely domestic situations.

17.5 Application to different group taxation regimes

Another of the issues raised after the Court's judgment in *Marks & Spencer* was whether the same reasoning would apply in the case of other group taxation regimes besides the group relief system.[1579] As a matter of principle, it should be stated that if there would be a different outcome, the CJ should refer to the fundamental differences that justify a different application of the *Marks & Spencer* principles regarding final losses. Otherwise it would be problematic (as it leads to uncertainty) if the CJ deviates from its previous case law without providing any clear reasoning.[1580]

The *Oy AA* case dealt with the Finnish group contribution system that mirrors the UK group relief system as it applies to the transfer of profits rather than to losses. Therefore, would a group contribution be acceptable in Finland as a tax-deductible expense in the case the receiving company of such transfer would have incurred final losses? Would the *Marks & Spencer* exception apply in such case? An affirmative answer to these questions would likely be expected. The issue, however, was not addressed by the CJ. One can only but speculate possible reasons[1581] to interpret the silence of the Court.

[1577] Concurrently see Ben Terra & Peter J. Wattel, European Tax Law, 6th edition (2012), p. 1028 and Suzanne Kingston "A Light in the Darkness: Recent Developments in the ECJ's Direct Tax Jurisprudence", Common Market Law Review 44, p. 1344.

[1578] CJ 10 June 2015, C-686/13 *X AB v Skatteverket*, paras. 32-39.

[1579] In its decision of 9 November 2010, I R 16/10 the BFH confirmed the application of the *Marks & Spencer* exception in the case losses incurred by foreign subsidiaries which are final due to factual reasons. In favour, in general, of the application of the *Marks & Spencer* reasoning within the context of the German Organshaft see Ronald Gebhardt & Karsten Quilitzsch, "Cross Border Loss Relief in the EU: Implications of Recent Developments in Germany Regarding Outbound Permanent Establishments", *EC Tax Review* 6, Kluwer Law International BV (2011), p. 271.

[1580] See Christiana HJI Panayi, "Reverse Subsidiarity and EU Tax Law: Can Member States be Left to their Own Devices?", 3 *British Tax Review* (2010), Sweet & Maxwell, pp. 20-21.

[1581] See on this, Bruno da Silva, "From Marks & Spencer to X Holding: A (Critical) Overview and Some Open Issues", in Dennis Weber & Bruno da Silva (eds.), *From Marks & Spencer to X Holding: The Future of*

A first explanation could be that the CJ was already considering the *Marks & Spencer* reasoning obsolete. Such a scenario is highly unlikely. The reasoning followed by the Court in *Oy AA* clearly indicates that *Marks & Spencer* is considered settled case law.[1582] It seems also inconceivable that in delivering the *Oy AA* judgment the Court would be implicitly revoking one of its most important judgments in the field of corporate direct taxation which was *Marks & Spencer*. The chronology of the CJ judgments fully supports this reasoning given that in *Lidl Belgium,*[1583] the Court made express reference to the *Marks & Spencer* conditions.

Another possible explanation may derive from the fact that differently from *Marks & Spencer*, it was not argued in *Oy AA* that the losses of the receiving company were final in accordance with the *Marks & Spencer* no possibilities test. On the contrary, the facts of the case demonstrate that the losses of the company were not final as they could be carried forward at the level of the parent company.[1584] This issue precisely was raised by AG Kokott in her Opinion:[1585]

> "However, on the information the reference for a preliminary ruling gives as to the facts, it does not appear that Oy AA is in an exceptional situation corresponding to that in Marks & Spencer. It follows that there is no cause to consider whether, by way of exception, the principle of proportionality requires a divergence from the allocation of powers to impose taxes."

This explanation is more obvious but not more convincing as to the lack of clarity of the Court's reasoning in this judgment. It seems in fact hardly conceivable that a case which had *Marks & Spencer* as a legal background, in which there is reference to the losses of the receiving company[1586] or in which the AG expressly referred to final losses, the Court would not make a single reference to the *Marks & Spencer* no possibilities test and to the need to determine whether the losses met such requirement[1587] in the case it considered the same reasoning to be applied in *Oy AA*.[1588]

Cross-Border Group Taxation, Kluwer Law International BV, The Netherlands (2011), pp. 12-13 and B.J. Biekebeld, "Grensoverschrijdende verliewsverrekening, *NFTR-B* 2007/47.

[1582] As it is implied by the numerous references made to the Marks & Spencer case. See ECJ 18 July 2007, C-231/05, *Oy AA*, paras. 18, 29, 30, 44, 46, 51 and 55.

[1583] See ECJ 15 May 2008, C-416/06 *Lidl Belgium GmbH & Co. KG v Finanzamt Heilbronn*, paras. 50 and 51. This judgment was in fact delivered almost one year later than *Oy AA*.

[1584] See ECJ 18 July 2007, C-231/05 *Oy AA*, para. 41 of the judgment where it is stated that:

> "The United Kingdom Government further argues that, since the intra-group financial transfer was not taxed in the United Kingdom, which Oy AA, however, denies, and since the losses of AA Ltd could be carried forward to other financial years so as to be set off against profits subsequently made […]"

[1585] See AG Kokott Opinion in Case C-231/05, delivered on 12 September 2006, para. 71.

[1586] See ECJ 18 July 2007, C-231/05 *Oy AA*, para. 12 with a reference to the UK company making a loss in 2003 and expecting to continue to do so in 2004 and 2005.

[1587] These arguments find full support when comparing the reasoning followed by the Court in *Lidl Belgium*. In that case, and since the losses were not final, the CJ held that the conditions of *Marks & Spencer* were not

A different explanation would be because *Oy AA* dealt with a situation where the contribution was from a profitable subsidiary to a loss-making foreign parent company while in *Marks & Spencer* the flow of (negative) income was the other way around. But there is no indication at all that the direction of the flow of income was a decisive element for the CJ's decision. And the question is naturally whether this could have made any difference at all for the outcome of the case[1589].

A possible explanation is that contrary to the UK group relief, the Finnish group contribution was based on a transfer of profits rather than a transfer of losses. As already referred to, the different mechanism by which the group contribution system operates – through an intra-group transfer of profits - was the reason why the Court disregarded one of the accepted justifications in *Marks & Spencer*: the double use of losses. There is indeed an inherent relation between this justification and the proportionality test performed in *Marks & Spencer*. In this case, the proportionality requirement refers to situations where the losses can no longer be used in the State of residence of the company where they originally arose. Therefore, in such scenario, in principle, the double use of the losses as argued by Member States – deduction in the State where they occurred and also in the State of the receiving company – is prevented. In the case of *Oy AA,* since there is no transfer of losses there is no risk of double use of losses and consequently, no proportionality requirement that applies in this scenario such to prevent those losses being used twice.

It is submitted that the *Marks & Spencer* proportionality requirement should also be applicable within the context of the group contribution system.[1590] The starting point is different: the group relief system is based on the surrender of losses and accordingly, the purpose of the *Marks & Spencer* no possibilities test is to ensure that losses are used only once, and that is achieved when the losses are final at the subsidiary level. From a technical point of view,[1591] the group contribution system is based on the transfer of profits which should be taxed at the level of the recipient. The fact that losses are final does not necessarily mean that to an intra-group deduction at the level of subsidiary there is a corresponding taxable contribution for the non-resident recipient. But aside from the

---

met since the losses could be carry-forward in the Member State where they were incurred. See ECJ 15 May 2008, C-416/06 *Lidl Belgium GmbH & Co. KG v Finanzamt Heilbronn*, paras. 50 and 51.

[1588] Concurrently, see Graham Airs, "Oy AA – Limitations on transfers of profits to domestic situations not precluded by the EC Treaty", *British Tax Review* 5 (2007), p. 603. Airs states precisely that, if the Court had thought that the outcome would be different in case *Oy AA* would be in a situation in which it had exhausted the possibility to use its losses, it would have made reference to it in its judgement.

[1589] This issue is subject to further analysis below when dealing with the question on group member should be entitled to claim cross-border loss relief. See *infra* 17.6.

[1590] Concurrently see Luc de Broe, *International Tax Planning and Prevention of Abuse: A Study under Domestic Tax Law, Tax Treaties and EC Law in Relation to Conduit and Base Companies*, IBFD Doctoral Series Vol. 14 (2008), p. 822.

[1591] See Sjoerd Douma and Caroline Naumburg, "Marks & Spencer: Are National Tax Systems Éclairé?", *European Taxation* 9, IBFD (2006), p. 433.

different technique, the aim of both systems is the same: to treat a group of companies as a single unit and ensure that they are taxed no more (but also no less) than a single company. Therefore, the Court should have ruled that in the situation where the losses of the foreign company were final, an intra-group deduction should be allowed in order to comply with the principle of proportionality. Factually the result ends up being the same under the two systems.

Indeed, in the case of final losses, there seems to be the same decisive element of definitiveness in the British and the Finish systems, notwithstanding the fact that in the former, the transfer of losses operates from loss-making group members, whilst in the latter a transfer of profits from profitable members takes place. In both situations, a loss of tax revenue will occur for the Member State at stake (the contributing State in the case of Finland and the surrendering State in the case of UK). As stated one can possibly try to distinguish *Oy AA* from *Marks & Spencer* based upon the circumstance that the former deals with transfer of profits and the latter with the transfer of losses and that this may be relevant for anti-abuse reasons. That seems to have formed the basis of the CJ's judgment[1592], namely the possibility of the taxpayer to elect to operate the transfer of profits, reinforced by the fact that the Finish systems of intra-group transfers does not require the receiving entity to have suffered losses.[1593] This, however, does not seem decisive to deny a reconciliation with *Marks & Spencer* reasoning. In such a scenario, the taxpayer would only be allowed to make a transfer to the State where the losses are final and this is not something that a taxpayer can typically control (e.g. loss carry-forward expiry). Even in a scenario of company liquidations, which most of the times are voluntary, they are determined by business reasons and therefore, the taxpayer would not have the opportunity to determine to which company/jurisdiction the profits should be transferred. And as referred to, even in the marginal cases where they are determined by tax reasons, such situations should be dealt under anti-abuse legislation which is a much more proportional outcome than simply to deny, in every situation the application of group contribution systems on a cross-border basis. In addition it also seems irrelevant if the Member State of the final loss-making company considers this transfer as taxable or not. Typically (and that would be a quite proportional limitation) the amount of transfer of profits does not exceed the amount of the tax losses to be absorbed. In other words, even if the Member State of the receiving company would deem such transfer profits as a taxable wealth increase, that would be offset by the corresponding final loss. In that regard, the jurisdiction in which the final losses are located is irrelevant to determine the extent of loss of tax revenue.[1594]

[1592] See ECJ 18 July 2007, C-231/05 *Oy AA*, paras. 58-59.

[1593] See ECJ 18 July 2007, C-231/05 *Oy AA*, para. 58.

[1594] Even in a situation where there would be final losses in different jurisdictions, that would not grant a particular leeway for the taxpayer as to where to transfer its profits considering the combination of factors referred to above:

(i) at the level of the receiving companies there is no jurisdiction shopping in search of the higher tax burden in the sense that the limit of the transferred profits would be the amount of losses to

Therefore it is hardly justifiable to provide for a different treatment to situations which are materially similar, breaching the principles of neutrality and equality which are cornerstones of the internal market.[1595]. The consequence of this unclear reasoning of the Court in *Oy AA* as compared with *Marks & Spencer* and the uncertainty about their exact scope of application led to contradictory decisions by the Finnish[1596] and Swedish Courts[1597] in situations dealing with a similar group taxation regimes.

In *X Holding* again, the Court made no reference to the proportionality of the restrictive measures in situations involving final losses. Such silence was interpreted as representing a

---

be absorbed, meaning that such absorption would not generate effective taxation as final losses are reduced to zero as a consequence of (the limit) of the transfer or profits;

(ii) at the level of the contributing entity because it is irrelevant where the profits are transferred since in the end it is in that Member State that the loss of tax revenue occurs.

[1595] Concurrently and confirming the application of the *Marks & Spencer* reasoning in the context of the Austrian group taxation system, see the Opinion of AG Kokott delivered on 16 April 2015 in case C-66/14 *Finanzamt Linz v Bundesfinanzgericht, Außenstelle Linz*. In paragraph 54, AG Kokott refers to the specific requirements for the deduction of losses incurred by foreign subsidiaries to be allowed at the level of an Austrian group parent company. Kokott makes reference precisely to the conditions set forth in the *Marks & Spencer* and *Commission v UK* (C-172/13) cases.

[1596] In Case *KHO 2007/3378 (92)*, 31 December 2007 The Finnish Supreme Court considered that the no possibilities test of *Marks & Spencer* would not apply in the case of the group contribution system based on this last argument. According to such Court, the main argument relied on the fact that the Finnish group relief system had different features: the UK system applies to surrender of losses whereas the Finnish group contribution system applies to the transfer of profits. The Finnish group contribution system requires that to a tax deduction arising from the transferred profits there is a corresponding taxation of the profits received. In that regard, the Finnish Supreme Court considered the group contribution system to be considerably different from the UK group relief system, reason by which the *Marks & Spencer* reasoning should not apply in such case.

[1597] A different conclusion was reached by the Swedish Administrative Supreme Court. This Court was confronted with the need to analyse several decisions regarding the compatibility of the Swedish group contribution system with EU law. This followed the previous position taken by the Swedish Board for Advance Rulings in a case involving contributions to (i) loss-making foreign subsidiaries (the *Marks & Spencer* scenario); (ii) foreign sister companies; and (iii) foreign parent companies. In *Gambro AB* case of 11 March 2009, the Swedish Court was confronted with a situation where a parent company intended to make a contribution to its foreign subsidiaries, one in liquidation and the other for which the time for loss carry-over had expired. Although the Swedish Board for Advanced Rulings accepted both cases as fitting in with the final losses definition of *Marks & Spencer*, the Swedish Court followed a much more restrictive approach. It considered that final losses only referred to losses arising from the liquidation of the foreign subsidiary (and not due to loss-carry over time expired) and, following *Marks & Spencer*, only in situations of contribution of the parent to the subsidiary which carried final losses (thus, not in situations involving contributions to foreign sister companies or foreign parent companies). See on these cases, Cecile Brokelind, "Gambro AB. the Swedish Supreme Administrative Court Applies ECJ'S Case Law on Cross Border Group Taxation in 10 Decisions on the Swedish Group Contribution Regime", *Highlights & Insights on European Taxation* 2009/5.7, Bertil Wiman, "Cross-Border Loss Relief in Europe – The Case of Group Contributions", in Luc Hinnekens & Philippe Hinnekens (eds.) *A Vision of Taxes within and Outside European Borders; Festchrift in Honor of Prof. Dr. Frans Vanistendael*, Kluwer Law International (2008), pp. 971–987 or Dunja Brodic, 'Swedish Advance Rulings: Group Contribution Regime Contrary to EC Law, *European Taxation* 3 IBFD (2007), pp. 153-155.

change in the conceptual approach of the CJ by reference to its earlier case-law.[1598]. As said, this could be representing a derogation to the *Marks & Spencer* exception. This was the Opinion of AG Kokott considering that the silence about final losses represented a development in the CJ's case law according to which, the exception could no longer be applied.[1599] The reasoning relied on the fact that in *X Holding*, preserving a balanced allocation of the powers to tax had been qualified as an autonomous justification. This objective would not be achieved at all if it were possible to deduct final losses.[1600] As already argued I consider that this is not the position followed by the CJ. First because, as explained, in *X Holding* the CJ did not apply the justification based on the balanced allocation of the powers to tax autonomously but in parallel with the prevention of tax avoidance. And, in any event, it is arguable that the fact that *Marks & Spencer* analysed three combined justifications should not lead to a different outcome, in terms of proportionality of the tax provision at stake, as compared with situations where it would be dealing with a single (autonomous) justification.[1601] Secondly, because the decision of the CJ, in particular in the *A Oy* case, clearly went against AG Kokott's Opinion, reaffirming the exception of cross border loss relief in case of final losses[1602] and that cannot be incidental.[1603]

Alternatively it was considered that the *Marks & Spencer* exception would not apply in the case of a consolidation regime such as the Netherlands Fiscal Unity.
If understood in these terms, the result of CJ case law draws a distinction between group relief systems and other systems (group contribution and consolidation regimes) whereas

[1598] See, Maarten F. de Wilde, "On X Holding and the ECJ's Ambiguous Approach towards the Proportionality Test", in *EC Tax Review* 2010/4, Kluwer Law International BV, p. 177. This motivated the *Conseil d'Etat* (French Supreme Administrative Court) to consider in its decision of 15 April 2015, that France, as the State of residence of a parent company, does not have to grant relief for losses incurred by foreign subsidiaries even if those losses are final in accordance with the respective Member States where they are located. In that case, a French parent company had a subsidiary in Poland and a sub-subsidiary in Italy (both of which incurred losses between 2000 and 2002. Under Polish and Italian rules, these losses could only be carried forward for 5 years. As the Polish and Italian subsidiaries could not make use of their losses within the 5-year period, the French company claimed that the losses became final in Poland and Italy, and should therefore be offset against the French parent company's profits pursuant to the *Marks & Spencer* case. The French tax consolidation regime is applicable exclusively to French resident subsidiaries. Therefore losses incurred by EU subsidiaries can never be offset against the profits of the French parent company, even though the subsidiary would fulfil all conditions required to be a member of the tax-consolidated group if it were a French-resident subsidiary. The question raised was then whether French legislation should extend to possibility of loss relief to losses incurred by subsidiaries located in other EU Member States, however those losses could no longer be used in these States because of their national tax rules. The *Conseil d'Etat* ruled that denial of cross-border loss relief in the case of final losses did not constitute a breach to the freedom of establishment relying, in particular, on its interpretation of the *X Holding* ruling.
[1599] See Opinion of AG Kokott Opinion delivered on 19 July 2012, in case C-123/11 *A Oy*, para. 52.
[1600] See Opinion of AG Kokott Opinion delivered on 19 July 2012, in case C-123/11 *A Oy*, paras. 49-51.
[1601] See in this regard the Opinion of AG Mengozzi delivered on 21 March 2013, in case C-322/11 *K*, para. 75.
[1602] See ECJ 21 February 2013, C-123/11 *A Oy*, para. 49.
[1603] As expressly acknowledge by AG Mengozzi in his Opinion delivered on 21 March 2013, in case C-322/11 *K*, paras. 72-74.

the more far-reaching the loss relief system is in a domestic context, the less far-reaching are the consequences from an EU perspective.[1604] This is a somewhat difficult to understand from a perspective of proportionality. And ultimately, the differences in the different group taxation regimes are purely technical and should be considered irrelevant as regards the final outcome of the judgments of the Court.

The fact is that in *X Holding,* the CJ did not considered the particular issue of the no possibilities test exception and therefore, accepted the measure as being proportionate, not making any comment on final losses. Actually, from the facts of the case, the existence of losses or, in any event, if there were final is unclear. It is therefore possible to reconcile *X Holding* with *Marks & Spencer* based on the different questions referred to the CJ: in *X Holding* the question concerned the subjective scope of the Netherlands fiscal unity and whether such limitation to domestic situations constituted a breach to the freedom of establishment. There was no specific question on deductibility of losses as in *Marks & Spencer* or *Lidl Belgium*. It is true that while the CJ dealt extensively with losses it ended up not making any reference to the finality of those losses. But that seems to be because the CJ limited itself to following the *ratio decidendi* of its previous case law which was based on the discussion on foreign losses. In the end, the Court was unable to deal with the intricacies of the Netherlands fiscal consolidation, not only for the purposes of not analysing whether other elements of the fiscal unity regime were compatible with EU law, but also for justifying its answer to the question referred. Therefore, it seems logical to assume that the silence of the CJ on the final losses issue is because of the nature of the question, and that in a situation where there are final losses of the subsidiary, the final losses exception must be applied[1605] also within the scope of the Netherlands fiscal unity. In fact, in a terminal loss situation, the situations under *Marks & Spencer* and *X Holding* would be identical: in both situations the flow of negative income goes from the subsidiary to the parent company; the non-resident subsidiary would not be taxed by the Member State of the parent company; both situations restrict loss relief to domestic situations. There are no differences which would therefore justify a different treatment and therefore, in the context of final losses, the Netherlands rules should also be found to be disproportionate.

Overall and from a dogmatic perspective, it seems incorrect to interpret the silence as meaning that the Court is changing its previous reasoning. First and foremost, because it

---

[1604] See Reinout Kok, "Domestic and Cross-Border Loss Relief in the European Union, 38 *Intertax* 12, Kluwer Law International BV (2010), p. 671.

[1605] See Dennis Weber, "Eight Points as to Why the X Holding Judgement is Incorrect", in D. Weber and B. da Silva (eds), *From Marks & Spencer to X Holding: The Future of Cross-Border Group Taxation,* EUCOTAX Series on European Taxation Vol. 29, Wolters Kluwer (2011), p. 41, Rui Camacho Palma, "X Holding: A Flawed Judgement or Yet Another Lesson in Consistency?", *EC Tax Journal* 12 (2011-2012), pp. 33-34 or Jose Manuel Calderon Carrero, "Las Pérdidas Transfronteirizas de Los Grupos de Sociedades y La Jurisprudencia del Tribunal de Justicia de La Unión Europea: Reflexiones Al Hilo de la STJUE X Holding BV", in Paulo Otero, Fernando Araújo e João Taborda da Gama, *Estudos em Memória do Prof. Doutor J.L. Saldanha Sanches, Vol. V* (2011), pp. 603-604; or Tom O'Shea, 57 *Tax Notes International* 10, (8 March 2010), p.4.

leads to legal uncertainty. How to know if in a particular case the silence of the CJ should be understood as meaning that it is changing its reasoning?
In addition, because the effort of the interpreter should insofar as possible, be to reconcile the Court's decisions and assume that previous decisions - especially when they are extensively referred in subsequent case law - were properly considered. Therefore, the task is to find what could be, from the Court's perspective, the differences in the factual background of the different case law that may have led to a different judgment. While it should be required that the CJ is absolutely clear in its reasoning – which sometimes it is not – it should not be requested of the Court to pronounce *obiter dictums* in order to foresee all possible different interpretations or scenarios that may derive from its judgments as per comparison with previous case law.

17.6 Group member entitled to the cross-border loss relief

An important issue when dealing with cross-border loss relief within the scope of group taxation regimes is to determine which group member company should be able to claim the deduction of the losses incurred by another group member company. This issue is relevant as it represents the choice of which Member State should take into account the final losses with the consequent impact in terms of decrease in its tax revenue.
The current state of affairs of the Court's case law does not provide a concrete answer as to which company may apply for a deduction of the (final) losses incurred by another group member.

In *Marks & Spencer,* the CJ concluded that it was the State of the ultimate parent company that had to provide to loss relief. But the fact is that it was that company which claimed for such cross-border loss relief considering that it was located in a Member State that provided for such possibility in a purely domestic scenario. The Court did not express in that judgment any limitation as to which company could be entitled to claim the loss relief. Also in the *A Oy* case, the CJ accepted the claim made by the parent company to benefit from the losses of its Swedish subsidiary but now in the context of an upstream merger. In the *Oy AA* case, the Court was confronted with the reverse situation of *Marks & Spencer* as the claim for loss relief was made by a Finnish subsidiary. The CJ considered that the Finnish legislation was discriminatory by denying the possibility of a subsidiary in Finland to make a group contribution to a group member resident in another Member State, although such limitation was considered justified. The fact is that the Court did not expressly reject the possibility of a claim for relief made by a subsidiary by stating that only the parent company could apply for such relief.

While there is still no case law to elucidate on this point, views have already been expressed in favour of limiting cross-border loss relief to certain situations. In particular,

the Commission has taken the position[1606] that cross-border relief should be limited to vertical upstream situations,[1607] that is, from the subsidiaries to the parent company. In that regard, arguments could be brought forward in order to support the limitation of the loss relief to the parent company. The fundamental argument, the limitation to upstream loss relief could contribute to decreasing the risk of tax avoidance. The argument based on the risk of tax avoidance derives from the possibility of groups of companies being free to determine where they wish to have their losses taken into account for tax purposes. This is particularly the case if, within the context of a group, a company has the possibility to offset its losses horizontally or vertically both upstream and downstream. For instance, allowing a vertical downstream relief of losses especially in cases of groups of companies with many subsidiaries or sub-subsidiaries would increase the possibility of choosing the Member State where to offset the losses. This flexibility would lead companies to allocate the losses to companies where the tax value is the highest. Therefore, and by limiting the loss relief to parent companies and excluding either subsidiaries or sister companies, this risk would be significantly reduced.
A further argument in favour of allowing cross-border loss relief only to vertical upstream situations would be to limit the possibility of multiple use of losses. According to this view, the possibility to allow cross-border relief in either vertical downstream situations (from parent to subsidiaries or to sub-subsidiaries) or horizontal situations (between sister companies) would represent a serious risk of multiple utilization of losses.[1608]

This reasoning in favour of a limitation to vertical upstream loss relief would then give rise to another fundamental issue: which company should be entitled to the loss relief in case of a chain of participations in which there are several layers of companies. Should the loss relief be granted to the direct parent company or to the ultimate parent company.
From a business perspective, the parent company is the one making the investment in its subsidiary by totally or partially contributing to its equity. In that regard, cross border loss relief would be granted to the parent company as a logical consequence of the risk undertaken with the investment in the subsidiary. From the perspective of the State of residence of the parent company the revenue impact deriving from the loss relief would be the reverse side of the possibility of this State taxing the dividends and the capital gains upon the sale of shares of the subsidiary. However this proposal has obvious limitations: first of all, it appears that it is not followed by the case law of the CJ since, in *Marks & Spencer* the Court granted loss relief for final losses to the UK parent company while the loss making subsidiaries were directly owned by a Netherlands intermediary holding

[1606] See Communication from the Commission to the Council, The European Parliament and the European Economic and Social Committee, "Tax Treatment of Losses in Cross-Border Situations", COM(2006) 824 final of 19 December 2006, p. 8.
[1607] See also the European Parliament resolution on, "Tax Treatment of Cross-Border Situations", (2009/C 41 E/02) of 15 January 2008, para. 15 stating that a decision should be taken whether cross-border loss relief should be limited to subsidiaries as regards their parent company or vice-versa.
[1608] See Jérôme Monsenego, *Taxation of Foreign Business Income Within the European Internal Market*, IBFD Doctoral Series Vol. 22 (2012), p. 146.

company. In addition, the symmetry argument between the taxation of dividends/capital gains and taking over the losses is not always logical: in the case of sale of the shares of subsidiaries to another parent company that becomes a member of the group it may occur that the Member State where such company is located must grant cross-border relief without the possibility to tax the dividends or capital gains on shares.[1609] And, as better explained below, the symmetry argument is not, by itself, a decisive argument in favour of the limitation of cross-border relief.
Following the above and considering the outcome in the *Marks & Spencer* case, one could consider that granting loss relief would then be limited to the ultimate parent company. This solution would rely on the possibility of the ultimate parent company to consolidate all the results of the whole group. In addition, it could allow mitigating all the above risks.

However and as appealing as it may be, neither of the above proposed solutions or limitations can be derived from the case law of the CJ. Indeed, it has been a concern in the Court's reasoning to prevent taxpayers from loss-trafficking, that is, jurisdiction-shopping for the relief of losses through the choice. For that purpose, the CJ approach is to consider that cross-border loss relief is subject to the condition that losses should not be capable of local use. It does not follow from such rationale that there is a limitation for loss relief at the level of the parent company. In other words, the fact that the losses are final means that there is no question of choice, because they can no longer be set off in the source State and bears no relation to the cross border relief being limited to the parent company. In fact, the purpose of the conditions set forth in *Marks & Spencer* to grant cross-border loss relief only to final losses was to limit the circumstances in which there was a risk to the balanced allocation of the powers to tax, that is, the situation in which the taxpayer was not able to freely choose the Member State in which to relieve the losses because there was no opportunity to use the losses locally. In addition, the arguments raised above in terms of the limitation of the possibilities of the companies that are entitled to claim cross-border loss relief also appear to ignore that the lack of symmetry between taxing rights exercised and relief for losses is not the reason, *per se*, which undermines the balanced allocation of taxing powers. The CJ reasoning relies in fact on the combined effect of both the absence of symmetry with the possibility to freely choose between jurisdictions and regimes. But precisely, the CJ notes that such freedom does not exist when the possibility to use the losses locally is exhausted giving rise to the circumstances that allow the cross-border relief. This means that there is no relation between the no possibilities test and the company that is entitled to claim the use of foreign losses.

Certainly that I acknowledge the risk of multiple use of losses, that is, the possibility of cross border relief being claimed by multiple companies of the group. However, such a risk should not constitute a limitation to the companies which are entitled to claim the use of foreign losses. That risk can rather be avoided by limiting the use of foreign losses to

[1609] See Jérôme Monsenego, *Taxation of Foreign Business Income Within the European Internal Market*, IBFD Doctoral Series Vol. 22 (2012), p. 145, 147-148.

situations where those losses can not be used locally nor are being claimed in any other Member State. And in order to have access to such information, the Member State where the use of foreign losses are being claimed can always rely on the existing mechanisms on exchange of information[1610] in order to verify that the conditions for the use of those losses are fulfilled.

It is submitted that this understanding is entirely in line with the reasoning adopted by AG Maduro in his Opinion[1611] in *Marks & Spencer*:

> "78. […] authorisation to transfer foreign losses in the context of group regimes adopted by the Member States may entail a general disruption of national systems. In its view, it may legitimately be believed that the transfer of losses will be systematically organised within groups of companies and directed solely to companies of the group established in Member States with higher rates of taxation. The reason for that is that in those States the losses transferred will have a higher value. Accordingly, there are grounds for fearing the likely development of a genuine "trafficking in losses" at Community level.
>
> 79. Certainly this risk must not be overlooked. Nor, however, should it be overestimated. It is readily dealt with by the requirement that the benefit of the relief is subject to the condition that the losses of foreign subsidiaries *cannot* receive advantageous tax treatment in the State in which those subsidiaries are resident. Where the State in which the foreign subsidiaries are established enables those subsidiaries to impute their losses to another person or to carry them forward to other financial years, the United Kingdom is entitled to oppose a claim for the transnational transfer of those losses. Relief will then have to be sought in the State in which the subsidiary is established. Consequently, the companies will not be at liberty to choose the place of imputation of their losses.
> […]
>
> 81. It may perhaps be objected that it will be excessively difficult for the United Kingdom to ascertain that there is a possibility of group relief in another Member State. In that connection it should be recalled that the Member States have available to them instruments of enhanced cooperation under Council Directive 77/799/EEC of 19 December 1977 concerning mutual assistance by the competent authorities of the Member States in the field of direct taxation. Under those provisions the competent authorities of one Member State have the power to request the competent authorities of another Member State to provide them with all information enabling them to establish the correct amount of corporation tax. In fact that instrument of administrative cooperation "provides for ways of obtaining information comparable to those existing between tax authorities at national level". Nor does it seem to me to be ruled out that the Member State concerned may impose on a company claiming group relief a duty of information as to the tax situation of the group to which it belongs and in particular the possibility of dealing with the losses of the subsidiaries in the State in which they are established. In such a case it will none the less be necessary to ensure that those requirements do not

[1610] Council Directive 2011/16/EU, of 15 February 2011 on administrative cooperation in the field of taxation.
[1611] Opinion of AG Maduro delivered on 7 April 2005 in case C-446/03, *Marks & Spencer plc v David Halsey (Her Majesty's Inspector of Taxes)*, paras. 78-79 and 81.

exceed what is necessary in order to attain the objective of securing the information sought."

17.7 Interim conclusions

The last stage of the rule of reason lies in the analysis of proportionality which entails pondering the limitations on free movement against the accepted overriding reasons in the public interest such that the application of the latter does not harm the former more than is necessary.

In the context of group taxation regimes, the proportionality test is inherently related to cross-border loss relief and the no possibilities test. In *Marks & Spencer*, the CJ ruled that a State is obliged to import foreign losses when those losses can no longer be used locally. This judgment in the context of a group relief system, posed a significant challenge for domestic courts and governments, which was to determine the exact meaning of final losses, how to calculate them and the circumstances that determine finality. Moreover, it also led to a significant number of questions as to what was the CJ rationale to follow this reasoning, if its reasoning applied to other group taxation regimes, and whether it limited the entities that could claim cross-border loss relief.

But a first striking aspect in the CJ case law was the fact that it disregarded the relevance of cash-flow disadvantages. One of the primary reasons to elect to form a tax group is the possibility to immediately offset losses with profits. In that regard, the cash-flow advantage deriving from this advantage is fundamental to the choice to form a group. Therefore, the fact can be criticised that the CJ did not acknowledge the relevance of cash-flow advantages – specifically considering that the related disadvantages had already been scrutinized several times as infringements to the freedoms – and only accepted that final losses can be used cross-border.
The adoption of a deduction recapture mechanism would clearly be more compliant with the goal of a tax group, would take into account the justifications accepted by the CJ and would be more in line with the proportionality test. As from the moment that the Court found a restriction to the freedom of establishment taking into account the aim of group taxation regimes, it should have favoured the adoption of a deduction recapture mechanism rather than a solution based on the finality of losses.

This solution would not only be more in line with the fundamental freedoms as it would avoid all sorts of interpretative issues as regards determining the meaning of final losses. The underlying rationale for the adoption of this solution may be traced back to the case law in the field of individual income tax and the *Schumacker* doctrine: the possibility to take into account the losses once. This commonly called always somewhere approach, however, is not absolute: it is limited to an *ab initio* possibility to use the losses where they arose. Only if that possibility no longer exists – but did exist at some moment – is the other Member State forced to take the foreign losses into account.

From the perspective of the Member State that imports the foreign losses, the Court approach is based on the existence of a discriminatory treatment. Therefore, a Member State is only obliged to take into account foreign losses if identical losses would be considered in a purely domestic situation.

As regards the circumstances that give rise to final losses it is submitted that both legal and factual exhaustion meet the requirements of finality. This is the solution that better fits into the wording of the CJ after the Marks & Spencer judgment and also avoids tax planning strategies as to allow the recognition of foreign losses in case the finality would be limited to factual exhaustion.

The CJ appears to adopt an all or nothing approach as regards final losses. Even if it apparent that not only foreign generated losses can be used in the respective State where they were incurred, Member States are not obliged to import the unused foreign losses based on a pro-rata approach, as long as even only a very small part of those losses will be used in the respective State where incurred. It is submitted that this is an incorrect approach followed by the CJ that is not in line with the principle of proportionality.

Another relevant issue is the case of concurrence between domestic and foreign (final) losses. In this event it has been submitted that, in principle, there is no priority as to the use of either of the losses.

As regards the calculation of the foreign generated losses, in principle, they should be subject to re-calculation under the rules of the Member State that imports those losses. However, this rule is subject to the lower of the two amounts: (i) the amount determined by the State where they were originally incurred if lower that the re-calculation by the State where the cross-border loss relief occurs; or (ii) the amount recalculated under the rules of the Member State that imports the losses if lower than the amount under the rules of the State where originally incurred.

In addition, it has also been submitted that the proportionality test and specifically the finality of the losses as determined by the CJ in the context of a group relief system is equally applicable in the context of other group taxation systems within the different EU Member States.

Finally, the CJ case law also does not allow to set any limitation as to which entity is entitled to claim cross-border group relief. Therefore, it is proposed that not only vertical upstream loss relief but also horizontal and downstream loss relief is possible when the conditions of the no-possibilities test are met.

Chapter 18

Per-element approach and per-element analysis

18.1 Introduction

Group taxation regimes may involve multiple benefits that may affect the tax position of the respective group members. In this regard, it becomes relevant to determine whether it is possible for a group member to claim specific benefits of a group taxation regime or, differently a tax group regime should be considered as a package deal meaning that the exclusion of cross-border group taxation *per se* excludes the possibility to have access to any of its benefits individually. The purpose of this section is precisely to determine whether it is possible to perform a per-element approach as regards tax groups and, if so, how to assess a per-element analysis against the freedom of establishment.

18.2 Per-element approach *vs* overall approach

According to the analysis previously performed,[1612] group taxation regimes may involve more than a single benefit. In both *Marks & Spencer* and *Oy AA*, the cases dealt with the possible extension of group taxation regimes that involved one single element: the offsetting of profits with losses either through group relief or group contribution systems. Differently in the case of *X Holding*, the fiscal unity regime involves a myriad of benefits. However, the accepted justification by the Court referred merely to the refusal of cross-border group relief and remained silent on other potentially discriminatory aspects involving rejecting non-resident companies from the fiscal unity regime. The question arises, what consequence could be derived from such silence. Essentially it is possible to conceive two options: (i) the CJ viewed the fiscal unity as a one package deal (all-in all-out approach); or (ii) the justification applied by the CJ should not be able to justify other benefits of the Netherlands group taxation regime and therefore, it is possible to challenge concrete elements of the fiscal unity regime (per-element approach) which would then require separate justification and proportionality analysis.

The last option appears to have been followed by AG Kokott who, in her Opinion,[1613] discussed other specific aspects (possibility of a tax neutral restructuring and transfer of assets or neutralization of transactions within the fiscal unity) of the Netherlands fiscal unity as to its compatibility with the freedom of establishment. This suggests that, according to AG Kokott's view, each element of the fiscal unity had to be examined separately as to its compatibility with EU law irrespective of whether taxpayers were

[1612] See *supra* Part II, Chapter 6.

[1613] See Opinion of AG Kokott delivered on 19 November 2009, in case C-337/08 *X Holding BV v Staatssecretaris van Financiën*, paras. 74-83.

subject to the comprehensive fiscal unity regime.[1614] In other words, if the refusal of cross-border consolidation was considered discriminatory due to the denial of the benefits available domestically, then such discrimination would have to be subject to justification in all its elements and could not be justified based in one single element. In the end, AG Kokott left the decision on those specific elements to the national court, but the relevance of her Opinion relies on the fact that certain transactions which were tax neutral if within the fiscal unity but without a fiscal unity (i.e. in cross-border situations) give rise to taxation could constitute a restriction to the freedom of establishment.

The CJ, although acknowledging the existence of other benefits related with the consolidation, was silent in this regard[1615]. A possible reading of this decision[1616] is that the CJ also followed – although less expressly then AG Kokott – a per-element approach. In fact, this Court concluded that there is a restriction to the freedom of establishment whenever the benefit of the fiscal unity was denied in a cross-border situation. The CJ considered that such restriction was justified by the need to preserve a balanced allocation of the powers to tax when it comes to loss relief. The silence of the Court could in fact be interpreted as suggesting that the other elements of a tax group require a separate assessment as to its compatibility with EU Law.

The CJ, although acknowledging the existence of other benefits related to the consolidation, was silent in this regard.[1617] A possible reading of this decision[1618] is that the CJ also followed – although less expressly than AG Kokott – a per-element approach. In fact, this Court concluded that there is a restriction to the freedom of establishment when the benefit of the fiscal unity was denied in a cross-border situation. The CJ considered that such restriction was justified by the need to preserve a balanced allocation of the powers to tax when it comes to loss relief. The silence of the Court, in fact, could be interpreted as suggesting that the other elements of a tax group require a separate assessment as to their compatibility with EU law.

[1614] See, in particular, Dennis Weber "Refusal of advantages of a cross-border tax consolidation in some situations an unjustified restriction of the freedom of establishment", Comment on Opinion of AG Kokott of 19 November 2009, in case C-337/08, X Holding, *Highlights & Insights on European Taxation* 2010/1.3.

[1615] Criticizing this silence, van Thiel refers that the CJ left the X Holding decision incomplete and that the failure to address the other aspects of consolidation as a denial of due process due to an insufficent statement of reasons. See Servaas van Thiel, "X Holding: A Denial of Justice", in Dennis Weber & Bruno da Silva (eds.), *From Marks & Spencer to X Holding: The Future of Cross-Border Group Taxation*, EUCOTAX Series no. 29, Kluwer Law International BV, The Netherlands (2011), p. 55.

[1616]See G.M.R. Blokland an M.J.A. van den Hornet, "X Holding vandaad de dag: kan de wetgever nu daadwerkelijk rustig ademhalen?" *Weekblad voor Fiscaal Recht* 2011/782.

[1617] Criticizing this silence, van Thiel states that the CJ left the *X Holding* decision incomplete and that the failure to address the other aspects of consolidation as a denial of due process due to an insufficient statement of reasons. See Servaas van Thiel, "X Holding: A Denial of Justice", in Dennis Weber & Bruno da Silva (eds.), *From Marks & Spencer to X Holding: The Future of Cross-Border Group Taxation*, EUCOTAX Series no. 29, Kluwer Law International BV, The Netherlands (2011), p. 55.

[1618]See G.M.R. Blokland and M.J.A. van den Hornet, "X Holding vandaag de dag: kan de wetgever nu daadwerkelijk rustig ademhalen?" *Weekblad voor Fiscaal Recht* 2011/782.

A different interpretation was followed by Wattel. According to his interpretation,[1619] the justification accepted by the CJ of preserving the balanced allocation of the powers to tax between Member States meant that the CJ acknowledged that subject to tax and not subject to tax is in fact not comparable.[1620] Therefore, the CJ felt no need deal with other elements and other possible justifications than those in connection with cross-border loss relief. And that silence could only have been deliberate, particularly in a situation in which the Court could not have been unaware of the other specific elements of the fiscal unity particularly considering the arguments raised by either *X Holding* and the Opinion of AG Kokott.

Similar to Wattel, the *Hoge Raad*[1621] also concluded that the Netherlands fiscal unity constituted a one package deal, reason by which the CJ had not considered it necessary to deal with other justifications. The justification of one of the elements of the fiscal unity was then assumed as justifying all the remaining elements. A similar reasoning was also followed by the BFH following the CJ's judgment in the *Scheuten Solar Technology* case.[1622] The facts involved Scheuten Solar Technology GmbH, a company established in Germany. Solar Systems BV, which was established in the Netherlands, became the sole shareholder of *Scheuten Solar* in 2003. Solar Systems had granted *Scheuten Solar* loans on which the latter paid interest during the fiscal year 2004. The tax authorities assessed the German company to business tax in 2004, not allowing 50% of the interest paid to Solar Systems to be deducted from the taxable base, making use of the add-back rule. *Scheuten Solar* considered that the full amount of the interest should be deductible – since in a purely domestic situation an established *Organschaft* would avoid the add-back - and challenged the tax authorities' decision arguing on the freedom of establishment. The BFH considered[1623] that, although the CJ judgment in *X Holding* concerned only cross-border losses, the justification was also valid for the remaining aspects of consolidation. Therefore, it concluded that a per-element approach should not be allowed regarding EU law

---

[1619] See second Opinion of AG Wattel delivered on 7 July 2010 in *Hoge Raad* no. 43484 bis, case *X Holding BV v Staatssecretaris van Financiën*, para. 4.5.

[1620] In this regard, Wattel refers to the decision of the CJ in the *Schempp* case as being comparable to the situation in the *X Holding* case. However, I agree with Weber that the two situations are different. In *Schempp,* the CJ was confronted with a situation of interaction of two Member States where the CJ specifically concluded that it was a disparity in the tax legislation of those Member States (see ECJ 12 July 2005, C-403/03 *Egon Schempp v Finanzamt Munchen V*, para. 45). Differently, in *X Holding* the Court considered that the Netherlands legislation provided for a restriction due to the difference in treatment between domestic and cross-border group constellations. See Dennis Weber "Eight Points as to Why the X Holding Judgement is Incorrect", in Dennis Weber and Bruno da Silva (eds.) *From Marks & Spencer to X Holding: The Future of Cross-Border Group Taxation*, EUCOTAX Series on European Taxation Vol. 29, Wolters Kluwer (2011), pp. 39-40.

[1621] This was also the conclusion of the Netherlands State Secretary who concluded that:

> "[…] in light of this judgment [X Holding], it is not necessary to examine whether certain elements of the fiscal unity regime are in conflict with article 43 EC."

[1622] See CJ, 21 July 2011, C-397/09 *Scheuten Solar Technology GmbH v Finanzamt Gelsenkirchen-Sü*.

[1623] I R 30/08, Bundesfinanzhof, 7 December 2011, *IStR* (2012) p. 262

protection and the denial of a single element of the consolidation could not constitute a violation of the freedom of establishment.

As a first remark to the reasoning followed by Wattel, it is worth noting that the Court in *X Holding* considered that a company subject to tax and company not subject to tax *were* indeed comparable. According to the Court:[1624]

> "[…] the situation of a resident parent company wishing to form a single tax entity with a resident subsidiary and the situation of a resident parent company wishing to form a single tax entity with a non-resident subsidiary are objectively comparable […]"

And also that the fact that, as already demonstrated, the CJ relied (essentially) on the justification based on the need to preserve a balanced allocation of the powers to tax between Member States does not imply a shift either in the meaning given to this justification or consequently, in the Court's previous case law.

Naturally, a possible question is whether the fiscal unity and group taxation in general constitute a comprehensive system in which it is not possible to detach particular benefits which allow its partial application. A group taxation regime such as the fiscal unity has the aim of achieving single entity taxation. All the benefits and consequences associated with the fiscal unity are related to such single entity treatment. However, that does not imply a strict correlation between all the particular benefits of its regime which impedes the separate assessment of each of its elements as to its compatibility with EU law.
In fact, and in a decision[1625] prior to *X Holding,* the *Hoge Raad* seemed to follow a per-element approach.[1626] The case involved a Netherlands BV which held a German GmbH subsidiary which suffered a loss. The taxpayer argued for the deduction of the subsidiary's losses in the Netherlands, regardless of whether there actually was a group. The claim was made based on the possible breach of EU law: in the case of a Netherlands subsidiary it would have been possible to include it in the group and consequently, to deduct the loss. The *Hoge Raad* rejected the taxpayer's request but did not follow the obvious reasoning of considering that, in the absence of a tax group, also the losses of a domestic subsidiary could not be used by the parent company and therefore, there was no discrimination. Instead, it went on to discuss whether the reasoning of *Marks & Spencer* applied to the case. The relevance of this case is that the *Hoge Raad*, by analysing the specific claimed by the taxpayer does not seem to have denied the possibility of a taxpayer being entitled to one of the benefits of the consolidation even if the (entire) group taxation package was not applicable. It rather indeed opened the possibility to test per-element whether the

[1624] CJ 25 February 2010, C-337/08 *X Holding BV v Staatssecretaris van Financiën*, para. 24.
[1625] *Hoge Raad* no. 08/00900, of 2 October 2009, *BNB* 2010/22.
[1626] See Thies Sanders "X Holding, the Morning after in the Netherlands", in Dennis Weber and Bruno da Silva (eds.) *From Marks & Spencer to X Holding: The Future of Cross-Border Group Taxation*, EUCOTAX Series on European Taxation Vol. 29, Wolters Kluwer (2011), pp. 134-135 or G.M.R. Blokland an M.J.A. van den Hornet, "X Holding vandaag de dag: kan de wetgever nu daadwerkelijk rustig ademhalen?" *Weekblad voor Fiscaal Recht* 2011/782.

impossibility to form a fiscal unity is compliant with EU law.[1627] This was precisely the interpretation derived by the Netherlands State Secretary of Finance who stated that:[1628]

> [The]… "judgment of the Supreme Court (HR, 2 October 2009, no. 08/00900, V-N 2009/49.22) from which it can be concluded that a taxpayer does not first have to request a cross-border fiscal unity in order to litigate on the question of how does missing out of one single positive effect of the fiscal unity relate to the EC Treaty freedoms."

In fact, the per-element approach can also be traced back to previous judgments of the CJ.

In the *Gielen*[1629] case the Court dealt with the Netherlands tax rules regarding the amount of deductions to be made by self-employed persons. According to the applicable rules, the right to the self-employed person's deduction was subject, *inter alia*, to an hour test. Such hour test corresponded to the provision during the calendar year of at least 1225 hours of work for one or more undertakings from which the taxable person derived profits as a business operator. In order to determine whether a non-resident taxable person satisfied that test, account was taken only of hours worked for the part of an undertaking operated in a PE in the Netherlands. Mr. Gielen was a German resident who operated a business in Germany also with a PE in the Netherlands. He worked more than 1225 hours in Germany but less than that number for the PE in the Netherlands. Mr Gielen considered that the refusal to take into account all the hours spent working for the business (i.e. even the hours outside the Netherlands) constituted a prohibited discrimination. The Netherlands held the opposite view considering that a non-resident taxable person could always take advantage of the option to be treated as a resident taxable person and therefore, benefit from the mentioned tax advantage. The question the *Hoge Raad* referred to the CJ was then whether the deduction from the Netherlands income tax which discriminated against non-resident taxpayers was compatible with the freedom of establishment where such taxpayers could allow to choose in advance between the residents" and non-residents' regimes. The CJ considered that even that such option existed under Netherlands tax law, the fact that a non-resident could not benefit from the deduction by being precluded from including the hours worked in another Member State amounted to a breach of the freedom of establishment. In other words, the CJ considered that a particular advantage characteristic of resident taxpayers should also be extended to non-resident taxpayers even it this latter category could in any even opt to be treated as residents. Materially, the Court followed a per-element approach by detaching a particular benefit of residents and extending it to non-residents.

Another example can be found in the *Bosal Holding*[1630] case. In this case, the Court considered that a denial of the deduction of an expenditure related with the financing of

---

[1627] See S.C.W.Douma, 'Sinterklaasbrief: fiscal-eenheidvoordelen zonder fiscal eenheid!", *NTFR* 2009/2599.
[1628] Letter (*Sinterklaasbrief*) of State Secretary of Finance of 5 December 2009 to the Lower Chamber, no. DB/2009/674M, *V-N* 2009/62.13, *NFTR* 2009/2617.
[1629] CJ, 18 March 2010, C-440/08 *F. Gielen v Staatssecretaris van Financien*.
[1630] ECJ 18 September 2003, C-168/01 *Bosal Holding v Staatssecretaris van Financien*.

holdings in foreign subsidiaries constituted a restriction to the freedom of establishment. The Netherlands tax law required a link between deduction of costs and taxation of profits in a way that such deduction was only available in the case of financing of domestic holdings since in that case, the profits of those companies were taxable in the Netherlands.
The outcome of this case led to an extension of a particular element of the Netherlands legislation – the deduction of expenditures – to cross-border situations - the financing of holdings in foreign subsidiaries without the correspondent disadvantage: the taxation of profits in the Netherlands. in other words, while a resident parent company which finances domestic holdings had a broader tax base as it could deduct expenses but its taxable profits were also taken into account in the Netherlands, in the case of financing of foreign holdings, only the particular tax advantage - the deduction of the expenditures - was applicable.

Another landmark case is *Manninen.*[1631] The *Manninen* judgment dealt with the application of the Finnish imputation system. Under such system, the corporate tax paid was treated as a pre-payment of the Finnish income tax therefore avoiding the economic double taxation: when a dividend was distributed to a shareholder, a credit was granted for the corporate income tax paid by the company. Such credit was not granted for dividends received from non-resident companies. The CJ considered this difference in treatment to constitute a breach of the freedom of establishment as Finland dissuaded the investment in companies established in other Member States. The CJ completely disregarded the logic between the taxation at the level of the distributing company and the credit granted for the underlying tax. Again this decision led to the application of a particular tax advantage without the corresponding drawback.

Further examples can be found within the specific context of group taxation regimes. Specifically, in the *Papillon*[1632] case, the different treatment found by the Court is interesting in the sense that literally, there was no discrimination: as referred to above, in a pure domestic situation all companies would have to be included in the group and it was therefore not possible to interrupt the chain. The finding of the Court seems to be based on a "de facto"[1633] rather than a strictly legal discrimination. This makes this judgment particularly interesting because the CJ ruled that the benefits of the French regime of fiscal integration of a French parent and sub-subsidiary can be disconnected from the fiscal integration of the French parent company and its Netherlands subsidiary. In other words, the failure to grant such benefits between two resident companies just because the intermediary subsidiary is in another Member State does not seem to be automatically justified simply by the fact that such configuration would not be allowed in a pure domestic situation. The Court seems to consider that such an argument cannot be used as a cover for

[1631] ECJ 7 September 2004, C-319/02 *Petri Mikael Manninen*.
[1632] See ECJ 27 November 2008, C-418/07 *Société Papillon v Ministére du Budget, des Comptes Publics et de la Fonction Publique*.
[1633] See Sjoerd Douma, "Papillon: group consolidation should be available for indirectly owned subsidiary", *Highlights & Insights on European taxation* 2009/2.1, pp. 44-54.

forbidden restrictions to the freedom of establishment.[1634] This reasoning was reiterated, in my view, correctly, in the Court's judgment of the *SGA Group Holding* case. Again, one of the issues was the possibility to apply the fiscal unity regime in order to consolidate the results of the parent Netherlands company with its sub-subsidiaries. The argument made against the taxpayer was precisely that there was no difference in treatment because under the Netherlands regime, no one could form a tax entity without including the intermediary subsidiary thus, in that regard, there was no difference in treatment between domestic and cross-border situations. The Court confirmed[1635] the existence of discrimination when stating that this derived from the fact that it was never possible for a domestic parent company with a foreign intermediary subsidiary to form a tax group with its sub-subsidiaries, unlike the situation of a Netherlands parent company with a domestic intermediary company which has the possibility to do so.[1636]

From my reading, the Opinion of AG Kokott in *SCA Holding Group* confirmed the possibility to apply a per-element approach when dealing with the multiple benefits of the Netherlands fiscal unity when stating that:[1637]

> "In *X Holding*, however, it was only examined whether the disadvantage arising from the fact that the non-resident subsidiaries may not participate in the tax entity is objectionable per se. On the other hand, that judgment did not explore the question whether the further consequences of the exclusion, in particular the disadvantage here that domestic sub-subsidiaries cannot be included in a tax entity, are also compatible with freedom of establishment." [underscore BdS]

With those words it appears, in my view, correctly, that Kokott confirms that *X Holding* only dealt with the general question whether not including foreign subsidiaries within the perimeter of consolidation is against the freedom of establishment. Another question is to

---

[1634] See F.A. Engelen, "De fiscale eenheid als dekmantel voor verboden discriminaties", *NTFR* 2012/102.

[1635] CJ 12 June 2014, Joined cases C-39/13, C-40/13 and C-41/13, *Inspecteur van de Belastingdienst Noord/kantoor Groningen v SCA Group Holding BV (C-39/13), X AG, X1 Holding GmbH, X2 Holding GmbH, X3 Holding BV, D1 BV, D2 BV, D3 BV, v Inspecteur van de Belastingdienst Amsterdam (C-40/13) and Inspecteur van de Belastingdienst Holland- Noord/kantoor Zaandam v MSA International Holdings BV, MSA Nederland BV (C-41/13)*, para. 25

[1636] In similar fact, AG Kokott who confirmed this approach also in the situation derived from the fact that a foreign parent company, unlike a domestic parent company, can never be included in the fiscal unity. The consequence is, naturally, that it suffers a disadvantage because it is precluded from the benefits of consolidation as regards its subsidiaries. See Opinion of AG Kokott delivered on 27 February 2014, in Joined Cases C-39/13, C-40/13 and C-41/13 *Inspecteur van de Belastingdienst Noord/kantoor Groningen v SCA Group Holding BV (C-39/13), X AG, X1 Holding GmbH, X2 Holding GmbH, X3 Holding BV, D1 BV, D2 BV, D3 BV, v Inspecteur van de Belastingdienst Amsterdam (C-40/13) and Inspecteur van de Belastingdienst Holland- Noord/kantoor Zaandam v MSA International Holdings BV, MSA Nederland BV (C-41/13)*, paras. 24-30 and 71-73.

[1637] Opinion of AG Kokott delivered on 27 February 2014, in Joined cases C-39/13, C-40/13 and C-41/13 *Inspecteur van de Belastingdienst Noord/kantoor Groningen v SCA Group Holding BV (C-39/13), X AG, X1 Holding GmbH, X2 Holding GmbH, X3 Holding BV, D1 BV, D2 BV, D3 BV, v Inspecteur van de Belastingdienst Amsterdam (C-40/13) and Inspecteur van de Belastingdienst Holland- Noord/kantoor Zaandam v MSA International Holdings BV, MSA Nederland BV (C-41/13)*, para. 28.

analyse further consequences of such exclusion, namely whether particular advantages are or not compliant with such freedom.

Therefore and consistently, AG Kokott adds the opportunity to reaffirm the per-element approach within the context of group taxation regimes in the Opinion delivered in *Finanzamt Linz*[1638] case. This case dealt with a request made by an Austrian company to depreciate the goodwill of its Slovakian subsidiary. Under the Austrian tax rules, goodwill depreciation, however, is already limited to situations involving domestic participations and only within the scope of the Austrian group taxation regime. Kokott concluded that the denial of the goodwill depreciation in the present case constituted an unjustified restriction to the freedom of establishment. The per-element approach is apparent in this case: the Austrian company requested a benefit that it is not only limited to participations in domestic subsidiaries but also that only accrues to resident companies included within a tax group. The Opinion of AG follows the taxpayer's request in the sense of extending a particular benefit of the Austrian group taxation regime to cross-border situations without requiring the application of the remaining group taxation regime. And this conclusion is reached because not extending that specific element in a cross-border scenario constitutes a restriction to the fundamental freedoms.

The CJ followed this reasoning. Although not engaging into a specifically per-element analysis the fact is that it extended a particular benefit of the domestic group taxation regimes to a cross-border scenario. [1639]

Even more clearly for the need of a per-analisys in a cross-border context is the decision of the CJ in the *Groupe Steria*[1640] when affirming that:

> As regards tax advantages other than the transfer of losses within the tax-integrated group, a separate assessment must therefore be made, […] as to whether a Member State may reserve those advantages to companies belonging to a tax-integrated group and consequently exclude them in cross-border situations.

The fundamental argument against the per-element approach is probably that it would allow international groups to choose particular elements of a tax group. More precisely, taxpayers would be allowed to cherry-pick specific tax benefits of the group taxation regime without being simultaneously subject to its drawbacks. In that regard, it was submitted[1641] that EU law does not serve to facilitate cherry-picking which would be the consequence of following a per-element approach. In turn, this would create inequality between domestic

---

[1638] See Opinion of AG Kokott delivered on 16 April 2015 in case C-66/14 *Finanzamt Linz v Bundesfinanzgericht, Außenstelle Linz*.

[1639] See CJ 6 October 2015, *Finanzamt Linz v Bundesfinanzgericht, Außenstelle Linz*.

[1640] See CJ, 2 September 2015, Case C-386/14, *Groupe Steria SCA v Ministere des Finances et des Comptes publics*, para. 28.

[1641] See second Opinion of AG Wattel delivered on 7 July 2010 in Hoge Raad no. 43484 bis, case *X Holding BV v Staatssecretaris van Financiën*, para. 4.5.

and cross-border situations as in a pure national scenario, taxpayers would be subject to all advantages and disadvantages of a package deal.

This argument is not convincing. EU law requires Member States to remove unjustified obstacles to the freedom of establishment. In addition, there is no EU law rule requiring that cherry-picking should be required or avoided. The effect of tackling a discriminatory treatment provided by a particular tax rule having as a consequence of converting it into a privilege position is not a concern of the Court.[1642] If the mechanics of existing legislation lead to a situation where the removal of existing obstacles favours cross-border groups as per comparison with domestic groups, that is a problem of the national legislation of Member States which has to be dealt with through the corresponding legislative adjustments. A possible solution[1643] is to permit cross-border groups to benefit from tax group regimes such as purely domestic groups and deny the particular elements when such different treatment can be justified and complies with the proportionality test.[1644] Therefore, Member States would allow forming cross-border tax groups but, depending on the specific advantage at stake, they could refuse it or attach particular conditions[1645] when it could endanger the balanced allocation of the powers to tax and/or lead to abuse.[1646] In fact, even in *Marks & Spencer,* the Court specifically acknowledged the possibility of abuse stating that:[1647]

> "It is also important, in that context, to make clear that Member States are free to adopt or to maintain in force rules having the specific purpose of precluding from a tax benefit wholly artificial arrangements whose purpose is to circumvent or escape national tax law."

[1642] See Joachim Englisch, "X Holding: Looking beyond Loss Relief Issues", in D. Weber & B. da Silva (eds.), *From Marks & Spencer to X Holding: The Future of Cross-Border Group Taxation*, EUCOTAX Series on European Taxation Vol. 29, Wolters Kluwer (2011), p. 74.

[1643] See Joachim Englisch, "X Holding: Looking beyond Loss Relief Issues", in D. Weber & B. da Silva (eds.), *From Marks & Spencer to X Holding: The Future of Cross-Border Group Taxation, EUCOTAX Series on European Taxation Vol. 29, Wolters Kluwer (2011),* p. 75.

[1644] Concurrently, also the opinion of Maisto who refers that consistency with proportionality suggests permitting cross-border consolidation providing simultaneously for anti avoidance-measures to cope with cherry-picking concerns. See G. Maisto, "Taxation of Groups and CCCTB, in A.P. Dourado (ed.), *Movement of Persons and Tax Mobility in the EU,* IBFD (2014), pp. 361-362.

[1645] An example provided by van Thiel is that if one of the concerns of entering into a cross-border fiscal unity was the risk of loss trafficking due to the possibility for companies to at all times opt in or out from the fiscal unity regime, it would be less restrictive of the freedom of establishment to abolish such right rather than simply reject extending the fiscal unity regime to foreign companies. See Servaas van Thiel, "X Holding: A Denial of Justice", in Dennis Weber & Bruno da Silva (eds.), *From Marks & Spencer to X Holding: The Future of Cross-Border Group Taxation*, EUCOTAX Series no. 29, Kluwer Law International BV, The Netherlands (2011), pp. 58, footnote 24.

[1646] See D. Weber, "Eight Points as to Why the X Holding Judgement is incorrect", in D. Weber & B. da Silva (eds.), *From Marks & Spencer to X Holding: The Future of Cross-Border Group Taxation,* EUCOTAX Series on European Taxation Vol. 29, Wolters Kluwer (2011), p. 46.

[1647] ECJ 13 December 2005, C-446/03 *Marks & Spencer plc v David Halsey (Her Majesty's Inspector of Taxes)*, para. 57.

Therefore, the cherry-picking problem does not seem to constitute a valid argument against the per element approach,[1648] as it is possible to find a solution for it.

Another argument against adopting a per-element approach could rely on the specificities of the different types of group taxation regimes. As previously analyzed,[1649] not all types of group taxation regimes have the same features and some provide for a higher degree of integration than others. In this respect it may be argued that for those group taxation regimes that provide for a higher degree of integration a per-element approach would simply not be possible because individual benefits (for example, participation exemption, non-application of interest deduction limitations, etcetera) would simply be a mere consequence of consolidation and the fact that transactions are simply disregarded within a group. Therefore, since those benefits are inherent to a tax group it would not be possible to detach or separate those benefits. This would mean that an all or nothing approach would have to be followed. And that would require extending the group taxation regime as such to a cross-border situation, which in itself does constitute a breach of the freedom of establishment. Ultimately, this *inherent approach* would preclude a per-element approach because the benefits could not be unbundled and detached from a tax group and could therefore only be granted within a group taxation context.[1650]

As regards this argumentation, it is first relevant to recall that the Court has already accepted that a group and non-group taxation situation is not by itself non-comparable. Back to *Metallgesellchaft,* the CJ has already accepted that group and non-group situations are not necessarily incomparable.[1651] And concretely, in *Groupe Steria,*[1652] it accepted that the situation of companies belonging to a tax group is indeed comparable to situations not belonging to a tax group. In addition, in *SCA Group Holding*, the CJ did not grant any relevance to the difference in the features of group taxation regimes. Even more concretely,

---

[1648] See G.M.R. Blokland an M.J.A. van den Hornet, "X Holding vandaag de dag: kan de wetgever nu daadwerkelijk rustig ademhalen?" *Weekblad voor Fiscaal Recht* 2011/782, Thies Sanders, "X Holding, the Morning after in the Netherlands", in D. Weber & B. da Silva (eds.), *From Marks & Spencer to X Holding: The Future of Cross-Border Group Taxation,* EUCOTAX Series on European Taxation Vol. 29, Wolters Kluwer (2011), p.133 and D. Weber, "Eight Points as to Why the X Holding Judgement is incorrect", in D. Weber & B. da Silva (eds.), *From Marks & Spencer to X Holding: The Future of Cross-Border Group Taxation,* EUCOTAX Series on European Taxation Vol. 29, Wolters Kluwer (2011), p. 47.

[1649] See *supra*, Chapter 6.

[1650] A somewhat mid-range solution is proposed by O. Marres, "Beëindiging van rechtswege per 1 januari 2003 van fiscale eenheid met EG-dochtervennootschap. Weigering horizontale verrekening van (nadien geleden) verliezen van EG-dochtervennootschap is niet in strijd met EG-recht", in *BNB* 2010/22. O. Marres while taking a position of principle of rejecting a per-element
approach still differentiates whether the associated benefits are inherent or not to the fiscal unity. If the advantages are not in the essence of the fiscal unity regime, Marres considers that the fiscal unity should not be used as a shelter for discriminatory treatment.

[1651] ECJ 8 March 2001, Joined Cases C-397/98 and C-410/98, *Metallgesellschaft Ltd and Others, Hoechst AG and Hoechst (UK) Ltd v Commissioners of Inland Revenue and HM Attorney General*, paras. 54-55.

[1652] CJ 2 September 2015, C-386/14 *Groupe Steria SCA v Ministere des Finances et des Comptes publics*, paras. 22 and 27.

AG Kokott's Opinion held that there is no evidence that such "*difference might result in a different assessment*"[1653]considering such argument as "*purely technical and irrelevant.*"[1654]

Therefore, the technique of consolidation of the different features of a tax group regime do not appear to be a compelling argument for the Court as to preclude following a per-element approach. And it is acceptable to compare tax group and non-tax group situations. Still, this does not mean that the Court does not acknowledge the fact that transactions are disregarded for tax purposes within a group. In successive case law when analyzing the compatibility of domestic group taxation regimes – *Papillon, SCA Group Holding* and *Group Steria* - the Court made reference to the fact that the different subsidiaries which are members of a group are "*disregarded which means that the various transactions within the group are considered non-existent in fiscal terms*"[1655] and dealt with the argument invoked by some Member States that certain benefits are "*indissociable from the tax integration scheme*". But these arguments were not accepted in the context of refusing that a group situation is necessarily different from a non-group situation and therefore, a per-element approach must be rejected because all the associated benefits of a group are inherent to the applicable group taxation regime. On the contrary, the CJ did give relevance to such argument in the context of possible justifications to the claims raised by taxpayers. This means that the Court actually accepted a per-element approach and ruled that the denial of specific elements of a tax group regime constituted a *prima facie* breach to the freedom of establishment. It then analysed whether – within the context of the specific benefit at stake – the consequence of group taxation, that is, disregarding transactions within a group, could constitute an acceptable justification in light of the need to preserve a balanced allocation of the powers to tax (*Groupe Steria*), prevent tax abuse (*SCA Group Holding*) or ensure the coherence of the tax system (*Papillon, SCA Group Holding, Group Steria*).

In fact, the per-element approach is entirely consistent with the CJ case law according to which the fundamental freedoms preclude any discrimination (even of limited scope or minor importance)[1656] and even possible compensatory benefits – related to eventual advantages of not being within the consolidation – are not relevant[1657] for the analysis. In

[1653] See Opinion of AG Kokott delivered on 11 June 2015, in case C-386/14 *Groupe Steria SCA v Ministère des finances et des comptes publics*, paras. 65.
[1654] See Opinion of AG Kokott delivered on 11 June 2015, in case C-386/14 *Groupe Steria SCA v Ministère des finances et des comptes publics*, paras. 77.
[1655] CJ 2 September 2015, C-386/14 *Groupe Steria SCA v Ministere des Finances et des Comptes publics*, para. 24.
[1656] See ECJ 11 March 2004, C-9/02 *Lasteyrie du Saillant v Ministere de l"Économie, des Finances et de l"Industrie*, para. 43 or ECJ 14 December 2006, Case C-170/05 *Denkavit Internationaal and Denkavit France*, para. 50.
[1657] See cases ECJ 27 June 1996, C-107/94 *P.H. Asscher v Staatssecretaris van Financien*, para. 53; ECJ 21 September 1999, C-307/97 *Compagnie de Saint-Gobain v Finanzamt Aachen-Innenstadt*, para. 54; ECJ 26 October 1999, C-294/97 *Eurowings Luftverkehers AG v Finanzamt Dortmund-Unnam*, para. 44; ECJ 6 June 2000, C-35/98 *Staatssecretaris van Financiën v B.G.M. Verkooijen*, para. 61; ECJ 19 December 2000, Case

other words, the unfavourable tax treatment, contrary to the fundamental freedoms, cannot be considered compatible with EU law merely because there are other advantages. The case law referred to above entirely supports this reasoning as it demonstrates that there are several examples where specific tax benefits were detached from the related drawbacks.

On the whole, banning in general the inclusion of foreign companies within a group should not preclude the analysis of particular disadvantages related to the exclusion of those companies. As a matter a fact, the denial of the per-element approach and the consequent rejection of each specific element separately would give the opportunity for Member States to introduce other unjustifiable restrictions to the treaty freedoms as long as they were bundled together in a package deal with at least once justified restriction.[1658] In other words: group taxation regimes would have the effect of validating tax measures which, separately, would be contrary to the fundamental freedoms.[1659] The consequence would be that the scope of the fundamental freedoms would be seriously reduced. Therefore, it is submitted[1660] that the CJ ruling in *X Holding* does not imply that the justification for the denial of cross-border loss relief precludes the analysis under the fundamental freedoms of specific discriminatory elements of group taxation regimes.

C-141/99, *Algemene Maatschappij voor Investering en Dienstverlening NV (AMID) v Belgische Staat*, para. 27; ECJ 8 November 2007, C-379/05 *Amurta SGPS v Inspecteur van de Belastingdienst/Amsterdam*, para. 75; CJ 1 July 2010, C-233/09, *Gerhard Dijkman and Maria Dijkman-Lavaleije v Belgische Staat*, para. 41; and CJ 20 October 2011, C-284/09, *European Commission v Federal Republic of Germany*, para. 71.

[1658] A possible good example that demonstrates the problems of an overall approach is the amended French rules on withholding tax on profits distributions after the judgment of the CJ in the *Santander* case (CJ 12 May 2012, Joined Cases C-338/11 to C-347/11, *Santander Asset Management SGIIC SA (and others) v Ministre du Budget, des Comptes publics, de la Fonction publique et de la Réforme de l"État*). This case considered that the French withholding tax rules on outbound dividends paid non-resident UCITS was in breach of the free movement of capital. Following this judgment, the French Government amended the legislation by introducing a 3% corporate income tax surcharge on corporate dividends which applies, *inter alia*, to dividends paid by a subsidiary to its parent company. An exemption applies however in the case of dividends paid between companies which belong to a tax consolidation group. This is limited to companies which are subject to French corporate income tax, thus excluding foreign companies. Therefore, inter-company dividends paid between French resident companies which meet the group consolidation requirements are tax exempt, while if paid to non-French companies meeting all the requirements except tax residence in France are subject to this surcharge. While arguably this may constitute a restriction to the freedom of establishment, following an overall approach would likely (at least following the outcome of the *X Holding* judgement and the way it was interpreted by the *Hoge Raad*) allow to justify that this difference in treatment does not refer to inter-company dividend payments but rather to the group consolidation regime itself which does not allow a foreign entity to become a group member. The overall approach somehow allows group consolidation regimes as a mechanism to justify measures which otherwise would arguably be considered as discriminatory. For a description of the French regime, see Eric Robert "The New French 3% Withholding Tax on Profit Distributions: A Minefield for the French Government", 53 *European Taxation* 2/3 IBFD (2013), pp. 115-120.

[1659] This was precisely the conclusion of the CJ in the *Gielen* case which is, in my view, an example of the per-element approach. See CJ 18 March 2010, C-440/08 *F. Gielen v Staatssecretaris van Financien*, para. 52.

[1660] Concurrently, See Joachim Englisch, "X Holding: Looking beyond Loss Relief Issues", in D. Weber & B. da Silva (eds.), *From Marks & Spencer to X Holding: The Future of Cross-Border Group Taxation,* EUCOTAX Series on European Taxation Vol. 29, Wolters Kluwer (2011), p. 75.

As properly held by Kokott in her Opinion in the *SGA Group Holding* case,[1661] in *X Holding* it was only examined whether the disadvantage arising from the fact that the non-resident subsidiaries may not participate in the tax entity is objectionable per se. That judgment did not explore the question whether the further consequences of the exclusion are also compatible with freedom of establishment. AG Kokott had the opportunity to reiterate this reasoning more clearly in her Opinion in *Group Steria* case:[1662]

> "31. A number of parties to the proceedings have tried to conclude from this judgment that Member States are entitled to exclude foreign companies from their group taxation regimes with regard to all the consequences entailed by group taxation. This would also include the rule at issue in the present case allowing the deduction of the 5% proportion under French group taxation.
>
> 32. However, under no circumstances has the Court granted Member States carte blanche to exclude non-resident subsidiaries from group taxation with regard to all its related consequences. In its judgment in *X Holding*, the Court examined solely whether it is justified not to allow a parent company to *offset losses* with a non-resident subsidiary as part of group taxation. The other consequences of an exclusion of non-resident subsidiaries from group taxation were not dealt with by the Court in that judgment.
>
> 33. Furthermore, in its judgment in *SCA Group Holding* the Court recently found that the right to exclude non-resident companies from group taxation does not itself automatically justify the exclusion of resident companies whose relationship to the group derives solely from a non-resident company. For example, a parent company should not be refused the advantage of including sub-subsidiaries in its group taxation solely because it was not allowed to integrate its foreign subsidiary into its group taxation.
>
> 34. Consequently, a separate assessment of each tax advantage granted under group taxation must be made to determine whether it can be justifiably refused by Member States in cross-border situations. A tax advantage restricted to resident group structures may not therefore be justified solely on the basis that it is granted as part of a special provision on group taxation under which non-resident companies may be excluded for the purposes of offsetting losses."

As explained throughout this section, the position followed by AG Kokott is appropriate as a different understanding would actually represent that the CJ would be permitting a

[1661] See Opinion of AG Kokott delivered on 27 February 2014, in Joined Cases C-39/13, C-40/13 and C-41/13, *Inspecteur van de Belastingdienst Noord/kantoor Groningen v SCA Group Holding BV (C-39/13), X AG, X1 Holding GmbH, X2 Holding GmbH, X3 Holding BV, D1 BV, D2 BV, D3 BV, v Inspecteur van de Belastingdienst Amsterdam (C-40/13) and Inspecteur van de Belastingdienst Holland- Noord/kantoor Zaandam v MSA International Holdings BV, MSA Nederland BV (C-41/13)*, para. 28.

[1662] See Opinion of AG Kokott delivered on 11 June 2015, in case C-386/14 *Groupe Steria SCA v Ministère des finances et des comptes publics*, paras. 31-34.

significant disproportional[1663] restriction to the freedom of establishment. The CJ clearly acknowledges this when explicitly referring in its judgment in the *Groupe Steria*[1664] case to the need for a per-element analysis and therefore, for an individual assessment against the freedom of establishment of every aspect of group taxation that is not equally applicable in a cross-border context.

18.3 Interim Conclusions

The CJ case law supports the view that a taxpayer may rely on the EU Treaty freedoms to invoke certain advantages in cross-border situations that are otherwise available domestically only within a tax group. Therefore, it is in principle possible for a taxpayer to claim certain elements – per-element approach - of group taxation regimes without the need of entering into a cross-border tax group. The reasoning developed in *X Holding* appears to reject extending group taxation to cross-border situations as such. For the Court, while the domestic limitation constitutes *prima facie* a restriction to the freedom of establishment, such restriction is justified as otherwise the parent company could decide on a yearly basis to a form a tax group or to terminate it.

Therefore, the conclusion stated in *X Holding* replied to the question whether the legislation of a Member State that denies that foreign subsidiaries may be part of a tax group was compliant with the freedom of establishment. The CJ considered that the interpretation of the freedoms does not preclude such legislation, which offers the possibility of forming a tax group with domestic subsidiaries while not allowing an identical possibility with foreign subsidiaries, ultimately because these are not subject to tax in the same Member State. However, it cannot be inferred from this judgment that any difference in treatment between companies belonging to a tax group and companies not belonging to such group are compatible with the freedom of establishment nor that the Court precludes an individual assessment of each individual benefits of a group taxation regime.

The interpretation of this judgment as well as subsequent case law, most notably in *Groupe Steria*, the Court in fact has affirmed that each element of a tax group must be assessed individually against the fundamental freedoms and therefore, it may be possible for a taxpayer to request in a cross-border context, certain benefits allowed domestically within a tax group.

This conclusion is not challenged either by nature and features of the particular group taxation regime at stake or by the prospect of cherry-picking related to the possibility of taxpayers choosing specific benefits of a tax group.

[1663] See Dennis Weber, "Eight Points as to Why the X Holding Judgement is incorrect", in D. Weber & B. da Silva (eds.), *From Marks & Spencer to X Holding: The Future of Cross-Border Group Taxation,* EUCOTAX Series on European Taxation Vol. 29, Wolters Kluwer (2011), p. 45.

[1664] See CJ 2 September 2015, C-386/14 *Groupe Steria SCA v Ministere des Finances et des Comptes publics*, para. 28.

Chapter 19

Per-element analysis: testing specific elements of group taxation regimes against the freedom of establishment

19.1 Introduction

It was previously concluded that the case law of the CJ - and the *X Holding* case in particular - does not pre-empt a per-element approach of each specific benefit of group taxation regimes as to its compatibility with the freedom of establishment. While the characteristics of group taxation regime and the related consequences vary to a considerable extend, I analyse below some of the most common benefits[1665] typically associated with a tax group regime, assessing on an individual basis, whether not extending those benefits to a cross-border situation may a breach of the freedom of establishment.

19.2 Intra-group transfer of assets

In a tax group situation, the possibility for one company to make a tax neutral intra-group transfer of assets to another company constitutes a significant tax advantage. Such possibility, however, is not available if the two companies are located in different Member States. Therefore, a cross-border transfer of assets may result in the taxation of unrealised capital gains whereas such transfer within the context of a domestic group will not trigger this taxation. Such taxation will thus result in a disadvantageous treatment between a cross-border transfer and a transfer performed between domestic group members. The relevance of this advantage is the possibility to extend this specific element of a tax group regime to cross-border situations, and the possible problem under the EU fundamental freedoms was acknowledged by AG Kokott when stating that:[1666]

> "It is for the referring court, if necessary, to examine the extent to which the national rules governing the transfer of assets and the tax treatment of hidden reserves, about which the Court does not have any information observe those principles."

[1665] Another related benefit typically associated with tax groups is that *intra-group dividend distributions* benefit from a tax exemption upon distribution by the group members and upon receipt at the level of the parent company. From the perspective of the per-element analysis, not extending this specific benefit to cross-border groups in principle will not lead to disadvantageous treatment due to the existence of other EU law instruments – the Parent-Subsidiary Directive – which will also lead to the same result of exempting dividend distributions. In fact, the application of the Directive is triggered as from the moment that there is a participation of at least 10%, while group membership is associated with substantially higher thresholds related with controlling participations.

[1666] See Opinion of AG Kokott delivered on 19 November 2009 in case C-337/08 *X Holding BV*, para. 81.

Indeed, the existence of a less favourable treatment between domestic and cross border transfers of assets within the scope of tax groups may constitute a restriction of freedom of establishment when such transactions are treated differently, for example, because hidden reserves must be discovered and taxed at that moment, whereas that is not the case with domestic transfers. This understanding is confirmed by the reasoning of the Court followed in cases *Commission v Portugal* and *Commission v Spain*, when dealing with the taxation of unrealized capital gains arising from an intra-community transfer of assets:[1667]

> "26. It is also settled case-law that all measures which prohibit, impede or render less attractive the exercise of the freedom of establishment must be regarded as restrictions on that freedom (*National Grid Indus*, paragraph 36 and the case-law cited).
>
> 27. […] in the case of partial or total transfer to another Member State of the assets of a permanent establishment in Portuguese territory of a company not resident in Portugal, such a company is penalised financially compared with a similar company which maintains its activities in Portuguese territory.
>
> 28. […] Furthermore, those provisions also impose taxation of unrealised capital gains in the case of partial or total transfer to another Member State of the assets of a permanent establishment in Portuguese territory of a company not resident in Portugal, whereas a transfer of assets in Portuguese territory does not result in such taxation. That difference in treatment is liable to deter a company from transferring its activities from Portuguese territory to another Member State […]."

While undisputedly[1668] the immediate taxation within a cross-border intra-group transfer of assets constitutes a restriction to the freedom of establishment,[1669] the next question is about possible justifications for such disadvantageous treatment.

A possible first justification to be brought forward by Member States may be the need to preserve the coherence of the tax system.[1670] As analysed before, the Court accepts this justification when there is a direct link between a provision granting a tax advantage and a provision giving rise to a tax liability, to be examined in light of the objective pursued by the legislation in question. The Court has already accepted the existence of a link between tax burdens and tax benefits deriving from group taxation regimes, notably in the *Papillon*

[1667] See cases CJ 25 April 2013, Case C-64/11 *European Commission v Kingdom of Spain*, paras. 226-28; and CJ 6 September 2012, Case C-38/10 *European Commission v Portuguese Republic*, paras. 26-28.

[1668] For other cases see CJ 21 May 2015 C-657/13 *Verder LabTec GmbH & Co. KG v Finanzamt Hilden*, paras. 36-39; and CJ 18 July 2013, Case C-261/11 *European Commission v Kingdom of Denmark*, paras. 27-29.

[1669] ECJ 11 March 2004, C-9/02, *Hughes de Lasteyrie du Saillant v Ministere de l'Economie, des Finances et de l'Industrie*, para. 46; ECJ 7 September 2006, Case C-470/04 *N v Inspecteur van de Belastingdienst Oost/Kantoor Almelo*, para. 35; CJ, 29 November 2011, C-371/10 *National Grid Indus BV v Inspecteur van de Belastingdienst Rijnmond/kantoor Rotterdam*, para. 73; CJ 6 September 2012, C-38/10 *European Commission v Portuguese Republic*, para. 26; and CJ 25 April 2013, C-64/11 *European Commission v Kingdom of Spain* , para. 24.

[1670] See cases ECJ 7 September 2006, C-470/04 *N v Inspecteur van de Belastingdienst Oost/Kantoor Almelo*, para. 42; and CJ 29 November 2011, C-371/10 *National Grid Indus BV v Inspecteur van de Belastingdienst Rijnmond/kantoor Rotterdam*, para. 46.

case[1671]. Likely, the fiscal coherence argument would be associated, on one hand, with the tax advantage deriving from the tax neutral transfer of the assets and, on the other, the disadvantage of not maintaining the book value of the asset. In other words, possibly an intra-group cross-border transfer of an asset would lead to an advantage for the transferor by benefiting from the tax neutral transaction and the transferee which would benefit from a step-up in the value of the assets and consequently, an increased value of the annual depreciation rate of such asset.[1672] However, different arguments do not support accepting this as a valid justification. First of all, because the understanding of the coherence as referring to situations in a single Member State and the same taxpayer could not be verified in this case. Moreover, because only the tax neutral treatment of the transaction would grant the positive impact on the group's liquidity which could not be compensated[1673] by an eventual step up in the value of the shares and the subsequent higher depreciation rate.

Another possible justification for the taxation of unrealized capital gains may be the need to safeguard a balanced allocation of the power to impose taxes between the Member States. In fact, the transfer of assets to another Member State could mean that the Member State of origin of those assets would be forced to abandon the right to tax a capital gain that arose within the ambit of its powers of taxation before the transfer. The tax levied at the time of the transfer of the assets is intended to subject to the Member State of origin a tax on profits on the unrealised capital gains which arose within the ambit of that State's power of taxation before the transfer of the place of management. Unrealised capital gains relating to an economic asset are thus taxed in the Member State in which they arise. Capital gains realised after the transfer of the company's place of management are taxed exclusively in the host Member State in which they have arisen, thus avoiding double taxation.

Therefore, by triggering the taxation of those gains at the time of the transfer of the assets, it is likely that the Court will accept such justification considering that the purpose of such taxation is precisely to prevent situations capable of jeopardising the right of the Member State of origin to exercise its powers of taxation in relation to activities carried on in its

[1671] ECJ 27 November 2008, Case C-418/07, *Société Papillon v Ministére du Budget, des Comptes Publics et de la Fonction Publique*, para. 50.

[1672] See Joachim Englisch, "X Holding: Looking beyond Loss Relief Issues", in D. Weber & B. da Silva (eds.), *From Marks & Spencer to X Holding: The Future of Cross-Border Group Taxation,* EUCOTAX Series on European Taxation Vol. 29, Wolters Kluwer (2011), p. 82.

[1673] In fact there would be a relevant cash flow disadvantage related to the immediate taxation of the full capital gain in the State of origin which would not be fully compensated by the higher depreciation rates and it could be relevant also to assess the justification based on the coherence of the tax system. See Joachim Englisch, "X Holding: Looking beyond Loss Relief Issues", in D. Weber & B. da Silva (eds.), *From Marks & Spencer to X Holding: The Future of Cross-Border Group Taxation,* EUCOTAX Series on European Taxation Vol. 29, Wolters Kluwer (2011), p. 82 and Maarten F. De Wilde, "On X Holding and the ECJ's Ambiguous Approach towards the Proportionality Test", *EC Tax Review* 4 (2010), p. 174.

territory.[1674] This reasoning is reflected in the Court's conclusions in *Verder LabTec* case:[1675]

> "Accordingly, the disclosure of unrealised capital gains relating to those transferred assets generated prior to that transfer within the tax jurisdiction of the Federal Republic of Germany, and the taxation of those unrealised capital gains, is intended to ensure the taxation of those unrealised capital gains, generated within the tax jurisdiction of the Federal Republic of Germany. The taxation of income relating to those assets generated after such a transfer falls to the other Member State, in whose territory the permanent establishment is located. Accordingly, tax legislation such as that at issue in the main proceedings is appropriate for ensuring the preservation of the allocation of powers of taxation between the Member States concerned."

Finally and insofar as the existence of any justifications for the restriction on freedom of establishment has been found, it is necessary to analyse the proportionality of such restrictive measure. In this regard, the Court has already decided that the immediate taxation (at the time of the transfer) of unrealized capital gains of a company transferring its place of effective management to another Member State is in breach to the freedom of establishment due to the existence of more proportional measures.[1676] Those measures comprise, notably the option between the immediate payment of the amount of tax and the deferred payment of such amount possibly combined with interest.[1677] The Court has considered the deferral of payment to constitute an adequate measure, considering also the existence of the Directive on mutual assistance for the recovery of claims.[1678] In this regard, companies which opt for the deferral of payment would continue to trace the assets transferred in respect of which the capital gain as been ascertained at the time of the intra-

---

[1674] CJ 29 November 2011, C-371/10 *National Grid Indus BV v Inspecteur van de Belastingdienst Rijnmond/kantoor Rotterdam*, para. 46.

[1675] CJ 21 May 2015, C-657/13 *Verder LabTec GmbH & Co. KG v Finanzamt Hilden*, para. 47

[1676] CJ 6 September 2012, C-38/10 *European Commission v Portuguese Republic*, paras. 26-28.

[1677] See cases CJ 21 May 2015, C-657/13 *Verder LabTec GmbH & Co. KG v Finanzamt Hilden*, para. 49; CJ 16 April 2015, C-591/13 *European Commission v Federal Republic of Germany*, para. 67; CJ 13 January 2014, C-164/12 *DMC Beteiligungsgesellschaft mbH v Finanzamt Hamburg-Mitte*, para. 61; CJ 6 September 2012, C-38/10 *European Commission v Portuguese Republic*, paras. 31-32; and CJ 29 November 2011, C-371/10 *National Grid Indus BV v Inspecteur van de Belastingdienst Rijnmond/kantoor Rotterdam*, paras. 73 and 85.

A further argument added by the Commission was that the interest itself could constitute a discrimination as interest would not be due in a pure domestic situation. In that regard I share the views of AG Mengozzi that there is an inherent difference between a domestic and a cross-border situation: while in a domestic situation the tax liability is triggered only at the moment of the effective realisation of the capital gains, there is no deferral of payment. Differently, in a cross-border situation, the tax liability is triggered upon the transfer of the assets to another Member State, but the payment may be indeed deferred to a subsequent moment: when there is actual realization of the capital gains. In simple words: in a domestic situation, there is no interest because there is no deferral of payment, contrary to a cross-border situation where that occurs. See Opinion of AG Mengozzi, delivered on 28 June 2012, in case C-38/10 *European Commission, v Portuguese Republic*, paras. 74-77.

[1678] Council Directive 2010/24/EU of 16 March 2010 *concerning mutual assistance for the recovery of claims relating to taxes, duties and other measures*.

group transfer. The existing Directive would allow the Member State of origin to check the veracity of such returns as well as to obtain the necessary information from the Member State of the transferee of the assets whether or not those assets have been realized.[1679]

In this latter case, the Court added that in order to take into account the risk of non-recovery of tax, Member States are allowed to adopt the measures to secure that risk which are provided in the respective national laws applicable to deferred payments of tax debts, such as the provision of a bank guarantee.
According to the CJ[1680] in case *Commission v Portugal*, the above reasoning while applicable within the context of the transfer of residence of a company to another Member State is entirely appropriate within the context of a transfer of assets to another Member State.[1681]

Some further remarks should be added as regards the proportionality test. First of all, it appears that the CJ draws a distinction between exit taxes on individuals and exit taxes on companies. In the *N* case[1682] dealing with individuals, the Court rejected the demand for a bank guarantee while it appears to accept such guarantee in the case of companies. In that regard, it has been argued that the deferral of unrealized capital gains should be

---

[1679] CJ 29 November 2011, C-371/10 *National Grid Indus BV v Inspecteur van de Belastingdienst Rijnmond/kantoor Rotterdam*, paras. 77-78.
[1680] CJ 6 September 2012, C-38/10 *European Commission v Portuguese Republic*, para. 34.
[1681] An interesting issue is the possible relevance of an overall approach when assessing the taxation of groups of companies. This argument was made in the *SGI* case regarding within the context of arm's length adjustments and based on a global view of the groups of companies presuming irrelevant to which company within a group particular income is allocated. The Court rejected such an overall approach by considering, *inter alia*, that the tax burden borne by the company receiving an advantage free loan could not be likened – in a cross-border situation - to the taxation of the company granting the advantage in question. And, in any event, eventual adjustments to the tax base could lead to situations of possible double taxation. See CJ 21 January 2010, C-311/08 *Société de Gestion Industrielle (SGI) v Belgian State*, paras. 51-54.
This same reasoning applies *mutatis mutandis* to intra-group transfers of assets. The overall approach would mean taking into account positive aspects deriving from the immediate taxation of the capital gains upon the transfer of the assets. Possibly the argument would be that this would lead to a step up of the value of the transferred asset being that the tax burden would be compensated by higher depreciation rate of the asset and possible lower capital gains taxation upon a subsequent resale of the asset by the group company acquiring it. Apart from the general rejection of the CJ by following this approach within such context, two arguments could be made as to not adopting such an approach: (i) the CJ only accepted an overall approach in the case the effects of a disadvantageous treatment are compensated within the scope of a bilateral tax treaty. The step up of the value of the assets and its depreciation is something which is typically not agreed bilaterally but refers to the legislation of a Member State which can then be amended unilaterally at any moment; (ii) those potential advantages do not compensate the immediate burden related to the taxation of the full capital gain upon the transfer of the asset.
[1682] ECJ 7 September 2006, C-470/04 *N v Inspecteur van de Belastingdienst Oost/Kantoor Almelo*, paras. 61-67.

unconditional and granted up to the moment of the alienation of the shareholding abroad.[1683] It is interesting to look at the Court's words used in *National Grid Indus*:[1684]

> "73. In those circumstances, national legislation offering a company transferring its place of effective management to another Member State the choice between, first, immediate payment of the amount of tax, which creates a disadvantage for that company in terms of cash flow but frees it from subsequent administrative burdens, and, secondly, deferred payment of the amount of tax, possibly together with interest in accordance with the applicable national legislation, which necessarily involves an administrative burden for the company in connection with tracing the transferred assets, would constitute a measure which, while being appropriate for ensuring the balanced allocation of powers of taxation between the Member States, would be less harmful to freedom of establishment than the measure at issue in the main proceedings. If a company were to consider that the administrative burden in connection with deferred recovery was excessive, it could opt for immediate payment of the tax.
> 74. However, account should also be taken of the risk of non-recovery of the tax, which increases with the passage of time. That risk may be taken into account by the Member State in question, in its national legislation applicable to deferred payments of tax debts, by measures such as the provision of a bank guarantee."

While indeed the Court does not follow the same approach both for individuals and for companies, it also appears that it does not require that companies should be required to submit a warranty at all times.[1685] The wording of paragraph 74 in fact suggests that the Court does not always require a warranty or necessarily a bank guarantee. It is required only when there is risk of non-recovery, a bank guarantee[1686] being an example of a warranty.

[1683] See P.J. Wattel, "Exit Taxation in the EU/EEA Before and After National Grid Indus", *Tax Notes International*, 30 January 2012, p. 374.

[1684] CJ 29 November 2011, C-371/10 *National Grid Indus BV v Inspecteur van de Belastingdienst Rijnmond/kantoor Rotterdam*, paras. 73-74.

[1685] Concurrently, see Tom O'Shea, "European Tax Controversies: A British-Netherlands Debate: Back to Basics and Is the ECJ Consistent?", *World Tax Journal* 1 (2013), p. 115.

[1686] In this regard, Englisch suggests an approach depending on the type of assets at stake in the intra-group transfer:

- In case of current assets, they should trigger immediate taxation because they can be excepted to be used or sold in a relatively short period of time since in that case the administrative burden related with the trace of those assets would be disproportional as to the relatively reduced cash-flow disadvantages deriving from the such taxation;
- Limited life fixed assets would be subject to an annual gradual taxation based on the accrued capital gain. The reason in this case is that the profits generated by the used business assets would likely be subject to taxation in case of a purely domestic intra-group transfer in the context of the tax group regime;
- Fixed and non-depreciable assets as well as substantial shareholdings would benefit from taxation deferral;
- Immediate taxation would also occur in case of intra-group transfer to a company located in a third (non-EU) country which does not have appropriate mechanism in place for the exchange of information and collection of taxes.

It is interesting to note the interpretation of AG Mengozzi in his Opinion in *Commission v Portugal*. He considered precisely that the provision of a (bank) guarantee should be subject to strict interpretation and should be required only if there is a genuine and serious risk of non-recovery of the tax claim. He further added that in any event, the bank guarantee to be requested cannot correspond to the total amount of the tax claim as otherwise such measure would be as restrictive as the immediate payment of the tax claim.[1687]
In addition and to materialise the existence or absence of such risk, he considered that a distinction should be made between situations in which the taxpayer is no longer in the respective State of origin – such as the transfer of place of effective management of a company or the cessation of a PE - from situations where there is a transfer of assets but the taxpayer remaining in the territory of such Member State. In these latter cases, the AG concluded that there was no need to provide for a guarantee for the recovery of the tax claim since the mere presence of the taxpayer in the Member State of exit would suffice.[1688] Regrettably, as the Court in *Commission v Portugal* was silent, it appears that it did not acknowledge this difference as proposed by the AG.

Another justification may relate to the risk of tax avoidance. In this regard, it is sufficient to recall that the CJ has, in principle, required that in order for this justification to proceed it should be addressed to situations involving wholly artificial arrangements designed to circumvent tax law. And that proof of the existence of evasion should be made on a case-by-case basis.[1689] A provision that triggers immediate taxation of unrealized capital gains upon an intra-group transfer of assets will typically not have such characteristics, since it is applicable to any situation when assets are transferred to another State outside the Member State of origin. Furthermore, the Court also accepts that a transfer of assets to be used more efficiently does not constitute abuse. Therefore, such a justification should be rejected.

19.3 Intra-group transfers: transfer pricing

The taxation of intra-group transfers is commonly subject to transfer pricing regulations that aim at counteracting artificial shifting of profits within international groups. Such regulations provide for adjustments involving cross-border transactions between related companies based on the arm's length standard. Within the context of domestic tax group regimes, either transfer pricing rules do not apply within the group or they are applied less

---

See on this, Joachim Englisch, "X Holding: Looking beyond Loss Relief Issues", in D. Weber & B. da Silva (eds.), *From Marks & Spencer to X Holding: The Future of Cross-Border Group Taxation,* EUCOTAX Series on European Taxation Vol. 29, Wolters Kluwer (2011), pp. 87-88.

[1687] See Opinion of AG Mengozzi, delivered on 28 June 2012, in case C-38/10 *European Commission, v Portuguese Republic*, paras. 80-82.

[1688] See Opinion of AG Mengozzi, delivered on 28 June 2012, in case C-38/10 *European Commission, v Portuguese Republic*, para. 120.

[1689] ECJ 11 March 2004, C-9/02 *Hughes de Lasteyrie du Saillant v Ministere de l'Economie, des Finances et de l"Industrie*, para. 35,

strictly.[1690] These rules do not limit themselves to allocate taxing rights among Member States but rather, they allocate profits among companies located in different Member States. This means that when a domestic company engages in non-arm's length transactions with a related party established in another Member State, transfer pricing rules may apply and adjustments may occur to the intra-group transfer. Since these types of regulations only apply to transactions performed between domestic and non-resident companies it is clear that they provide for a different tax treatment between domestic group companies depending on whether or not the related party involved in the intra-group transfer is established in the same Member State.[1691] In that sense they constitute a restriction[1692] to the freedom of establishment.[1693]

The question is then whether such rules can be considered justified by overriding reasons in the public interest. In essence, the possible justifications are the need to protect the cohesion of the national tax system, the safeguarding of the balanced allocation of the powers to tax between Member States and the prevention of tax avoidance.

As regards the coherence of the tax system, again the issue is that the Court requires that disadvantages and advantages are incurred by the same taxpayer. In this regard, it is not apparent which tax advantage offsets the unfavourable tax treatment relating to the possible transfer pricing adjustments in the context of a cross-border group.

The next justification concerns the need to safeguard the balanced allocation of the powers to tax between Member States. In this regard it is worthwhile to recall the Court's statement in the *SGI* case:[1694]

> "To give companies the right to elect to have their losses or profits taken into account in the Member State in which they are established or in another Member State could seriously undermine a balanced allocation of the power to impose taxes between the Member States, since the tax base would be increased in one of the States in question, and reduced in the other, by the amount of the losses or profits transferred […]

[1690] See Frans Vanistandael, "Group Taxation under domestic law: Common law versus civil law countries", in G. Maisto (ed.) *International and EC Tax Aspects of Groups of Companies*, EC and International Tax Law Series, Vol. 4, IBFD (2008), p.90.

[1691] For a criticism on whether the examination of transfer pricing regulations as regards the freedom of establishment should be dependent on unequal treatment between domestic and cross-border transactions, see W. Schon, "Transfer Pricing, the Arm's Length Standard and European Union Law", Max Planck Institute for Taks Law and Public Finance, Working Paper 2011-08, September 2011, available at: http://papers.ssrn.com/sol3/papers.cfm?abstract_id=1930237 (accessed on 15 June 2014).

[1692] CJ, 21 January 2010, Case C-311/08, *Société de Gestion Industrielle (SGI) v Belgian State*, para. 44.

[1693] The eventual application of a pricing adjustment even that followed by an existing compensatory adjustments in the other Member State is not sufficient for the Court to remove the discriminatory character of these measures. In addition, the administrative requirements related to the adjustments as well as financial burden to which a company suffers when submitting a case of double taxation pursuant to the application of transfer pricing rules are all obstacles within the context of a cross-border group. CJ, 21 January 2010, C-311/08, *Société de Gestion Industrielle (SGI) v Belgian State*, paras. 52-54.

[1694] CJ 21 January 2010, C-311/08 *Société de Gestion Industrielle (SGI) v Belgian State*, paras. 62-63.

> […] it must be held that to permit resident companies to transfer their profits in the form of unusual or gratuitous advantages to companies with which they have a relationship of interdependence that are established in other Member States may well undermine the balanced allocation of the power to impose taxes between the Member States. It would be liable to undermine the very system of the allocation of the power to impose taxes between Member States because, according to the choice made by companies having relationships of interdependence, the Member State of the company granting unusual or gratuitous advantages would be forced to renounce its right, in its capacity as the State of residence of that company, to tax its income in favour, possibly, of the Member State in which the recipient company has its establishment."

This understanding matches the one proposed by AG Kokott in her Opinion[1695] which links the need to accept this justification with the possibility to manipulate the tax base between Member States and consequently shift profits from one Member State to the other:

> "72. By excluding the possibility for undertakings in a relationship of interdependence with each other to grant unusual or gratuitous advantages and thus transfer profits from the tax base of a resident company to that of a non-resident company, Article 26 of the CIR 92 also safeguards the balanced allocation of the power to tax.
>
> 73. Such advantages are, in fact, disguised profit transfers between undertakings in a relationship of interdependence with each other. In *Oy AA*, the Court held that payments between associated companies undermine the allocation of the power to tax. If such transfers were to be recognised for tax purposes, companies within a group could choose freely the Member State in which profits are to be taxed, regardless of where they were generated."

Lastly, the risk of tax avoidance as a justification for applying transfer pricing regulations when involving cross-border groups is accepted due to its relation with the previous justification based on the need to preserve the balanced allocation of the powers to tax between Member States. This is precisely the outcome in the *SGI* case,[1696] which confirmed the central role performed by the second justification and the auxiliary role of the risk of tax avoidance.

In the sense that these can constitute accepted justifications, it is necessary to determine whether they are proportional to attain the objectives pursued. In that regard the Court has already determined that it must be possible for a taxpayer to show that, although the terms of its transaction were not arm's length, there were nonetheless genuine commercial reasons for the transaction other than obtaining a tax advantage.[1697] In any case, the information required to be provided by the taxpayer in order to rebut the presumption

---

[1695] See Opinion of AG Kokott delivered on 21 January 2010, in case C-311/08 *Société de Gestion Industrielle (SGI) v Belgian State*, paras. 72-73.

[1696] CJ 21 January 2010, C-311/08 *Société de Gestion Industrielle (SGI) v Belgian State*, paras. 65-69.

[1697] See cases CJ 21 January 2010, C-311/08 *Société de Gestion Industrielle (SGI) v Belgian State*, paras. 71; ECJ 23 April 2008, C-201/05 *The Test Claimants in the CFC and Dividend Group Litigation v Commissioners of Inland Revenue*, para. 84; and ECJ 13 March 2007, C-524/04, *Test Claimants in the Thin Cap Group Litigation v Commissioners of Inland Revenue,* para. 82.

should not be disproportionate or mean that it is excessively difficult or impossible to do so. In cases where the payments are found to be beyond the arm's length pricing, only the excess part of the payments over what would have been agreed on arm's length terms should be subject to adjustment.[1698]

19.4 Amortization of participations

Another possible issue to be considered is the case of a national measure that provides for an amortisation of participations, at the level of the parent, only for national subsidiaries which are part of the respective group taxation regime. The possibility to amortize shareholdings constitutes a tax advantage as it allows for a tax deduction. The fact that such measure is limited to national shareholdings in the context of companies included in the group taxation perimeter consequently excluding foreign participations may trigger the issue of the compatibility of such rules with the freedom of establishment.

Already in *Rewe Zentralfinanz,* the CJ was confronted with a somewhat similar issue regarding the impossibility of write-down in value of foreign participations. In that case the Court acknowledged[1699] quite appropriately that the impossibility to benefit from such a deduction might dissuade a parent company established in a Member State from carrying on its activities through subsidiaries established in other Member States. An identical reasoning was followed in the *Steko* case where the Court once again considered that resident companies holding shares in non-resident companies were placed in a less favourable situation when compared with holding such shares in resident companies as they could not benefit from the partial write-down of those holdings[1700].
Subsequently the Court opined in similar fashion[1701] in *Finanzamt Linz* case when dealing with the Austrian legislation that limits the amortization of goodwill of shareholdings to domestic companies that are part of the fiscal unity regime in Austria. Therefore, identical legislation limiting the amortization of shareholdings may constitute a breach to the freedom of establishment.

As regards possible justifications, a first argument may be the need to preserve the cohesion of a tax system. As previously analyzed, the CJ has consistently held that for an argument based on such justification to succeed, a direct link had to be established between the tax advantage concerned and the offsetting of that advantage by a particular tax levy.
The success of this justification may depend on the nature of the amoritzation at stake. In *Papillon*, the Court accepted the coherence argument that could otherwise give rise to a double use of losses at the level of the parent company arising from the depreciation of the

[1698] CJ 21 January 2010, C-311/08 *Société de Gestion Industrielle (SGI) v Belgian State*, para. 72
[1699] ECJ 29 March 2007, C-347/04 *Rewe Zentralfinanz eG v Finanzamt Köln-Mitte*, para. 36.
[1700] ECJ 22 January 2009, C-377/07, *Finanzamt Speyer-Germersheim v STEKO Industriemontage GmbH*, paras. 25-26.
[1701] See CJ 6 October 2015 C-66/14, *Finanzamt Linz v Bundesfinanzgericht, Außenstelle Linz,* paras. 28-29.

holding in the subsidiary and direct use – via income consolidation - of the losses of the generated by the sub-subsidiary[1702].
However in other cases the Court has rejected the existence of such direct link. Notably, the CJ has disregarded the argument of symmetry between disallowing the write-down of participations and the exemption of capital gains upon the sale of foreign participations. Typically, the Court has considered[1703]that the absence of such link arises because the restrictions as to the amortization produce immediate effects and to not have a direct connection with the subsequent disposal at a later stage and the possible capital gains obtained. The coherence justification requires a "strict correlation" between the deductible element and the taxable element. The amortization of participations provides an immediate deduction in respect of the holding in shares while the capital gains realised are uncertain as they assume that a sufficient level of profit is achieved and that there is a sale of the shareholding at a certain moment in time.

Other argument may be the need to maintain a balanced allocation of the powers to tax between Member States. This justification is also unlikely to succeed. Typically, this justification refers to the transfer of profits or losses from one Member State to the other. The amortization of shareholdings in foreign subsidiaries refers to costs that are accounted exclusively at the level of the parent company and, in that regard, to not constitute an effective transfer of results between Member States.

Yet another possible justification is the possible (double) use of the same losses, that could derive in case of amortization of participations in the event of deduction of losses incurred by the subsidiary and then by the parent company by means of reduction in the book value of its shareholdings in foreign subsidiaries. However, in this regard, the Court's reasoning is to consider that losses related to the writing down of the book value of the shareholdings are taken into account only as regards the parent company and are subject, for tax purposes, to a different treatment from that which applies to losses incurred by the subsidiaries themselves. According to the Court, such a separate treatment of, first, the losses suffered by the subsidiaries themselves and, secondly, the losses incurred by the parent company do not amount to the same losses being used twice.[1704] As referred, the CJ admitted the relevance of a possible double use of losses in *Papillon* but based on the justification based on the need to preserve the coherence of the tax system and in a situation of the same losses being used twice in the same jurisdiction.

Finally, it could be argued that the denial of amortization of foreign shareholdings is justified for the need to prevent tax avoidance. In this regard it is sufficient to recall the CJ

[1702] ECJ 27 November 2008, C-418/07, *Société Papillon v Ministére du Budget, des Comptes Publics et de la Fonction Publique*, paras. 45-50.
[1703] See cases CJ 6 October 2015, C-66/14, *Finanzamt Linz v Bundesfinanzgericht, Außenstelle Linz,* para. 49; ECJ 22 January 2009, C-377/07, *Finanzamt Speyer-Germersheim v STEKO Industriemontage GmbH*, para. 54; ECJ 29 March 2007, C-347/04 *Rewe Zentralfinanz eG v Finanzamt Köln-Mitte*, para. 48.
[1704] See ECJ 29 March 2007, C-347/04, *Rewe Zentralfinanz eG v Finanzamt Köln-Mitte*, para. 48.

reasoning that typically rejects general measures of principle, designed to counteract tax avoidance requiring the existence of wholly artificial arrangements that is are hardly present in an abstract and general regulation that rejects amortization of foreign shareholdings.[1705]

19.5 Intra-group dividend distributions

One of the inherent benefits in the context of the application of group taxation regimes is the possibility of intra-group dividend distributions being tax exempt both from the perspective of the distributing company (outbound dividends) – by not levying any withholding tax – and the receiving company (inbound dividends) – through granting an exemption or otherwise an indirect tax credit for the taxation of the distributed profits at the level of the subsidiary. The underlying reasoning for this benefit is to avoid that due to the existence of different taxpayers and consequently possible different layers of taxation, dividends distributed could otherwise be subjected to double or multiple taxation.

In an EU context, typically the situation of cross-border dividend distributions will be covered by the regime of the Parent-Subsidiary Directive. As analysed previously, the Directive abolishes withholding taxes on payments of dividends between associated companies of different Member States as well providing for mechanisms to prevent double taxation of parent companies on the profits distributed by their subsidiaries. However situations covered by the Parent-Subsidiary Directive[1706] or which fall outside the scope of the Parent-Subsidiary Directive[1707] may nevertheless be subject to scrutiny under the fundamental freedoms. This can refer to either outbound dividends or inbound dividends.

As regards outbound dividends, the CJ has consistently held that when dividends paid to non-resident parent companies are subject to tax while they benefit from an exemption in case of a pure domestic situation, such difference in treatment constitutes a breach of the freedom of establishment or of the free movement of capital.[1708] The Court observes in this respect that non-resident companies receiving dividends sourced in one Member State

---

[1705] See ECJ 29 March 2007, C-347/04 *Rewe Zentralfinanz eG v Finanzamt Köln-Mitte*, paras. 50-51.

[1706] See cases ECJ 23 March 2006, C-471/04 *Finanzamt Offenbach am Main-Land v Keller Holding GmbH*, para. 45 or ECJ 12 December 2006, C-446/04 *Test Claimants in the FII Group Litigation v Commissioners of Inland Revenue*, para. 46.

[1707] See cases ECJ 12 December 2006, C-374/04 *Test Claimants in Class IV of the ACT Group Litigation v Commissioners of Inland Revenue*, para. 54; ECJ 8 November 2007, C-379/05 *Amurta SGPS v Inspecteur van de Belastingdienst/Amsterdam*, para. 24; ECJ 19 November 2009, C-540/07 *Commission of the European Communities v Italian Republic*, para. 31; and CJ 3 June 2010, C-487/08 *European Commission v Kingdom of Spain*, para. 40.

[1708] See cases ECJ 14 December 2006, C-170705, *Denkavit Internationaal BV and Denkavit France SARL v Ministre de l"Économie, des Finances et de l"Industrie*, paras. 27-28; ECJ 8 November 2007, C-379/05 *Amurta SGPS v Inspecteur van de Belastingdienst/Amsterdam*, paras. 38-39; ECJ 19 November 2009, C-540/07, Commission of the European Communities v Italian Republic, para. 45; CJ 3 June 2010, C-487/08 *European Commission v Kingdom of Spain*, para. 42-43; and CJ, 20 October 2011, C-284/09 *European Commission v Federal Republic of Germany*, paras. 55-56.

suffer a disadvantage when compared with purely domestic intra-group dividend payments in that Member State. As regards to the comparability reasoning, the CJ starts by considering that resident shareholders receiving domestic sourced dividends are not necessarily comparable with non-resident shareholders receiving dividends from the same Member State. However the Court considers that the situations become comparable as from the moment that the source Member State decides to tax not only resident shareholders but also non-resident shareholders as regards dividends paid by a resident company. The CJ reasoning can be summarized as follows:[1709]

> "37. The Court has already held that, in the context of measures laid down by a Member State in order to prevent or mitigate the imposition of a series of charges to tax on, or the economic double taxation of, profits distributed by a resident company, resident shareholders receiving dividends are not necessarily in a situation which is comparable to that of shareholders receiving dividends who are resident in another Member State.
>
> 38. However, as soon as a Member State, either unilaterally or by way of a convention, imposes a charge to income tax not only on resident shareholders but also on non-resident shareholders in respect of dividends which they receive from a resident company, the position of those non-resident shareholders becomes comparable to that of resident shareholders.
>
> 39. In fact, it is solely because of the exercise by that State of its taxing powers that, irrespective of any taxation in another Member State, a risk of a series of charges to tax or economic double taxation may arise. In such a case, in order for non-resident companies receiving dividends not to be subject to a restriction on the free movement of capital prohibited, in principle, by Article 56 EC, the State in which the company making the distribution is resident is obliged to ensure that, under the procedures laid down by its national law in order to prevent or mitigate a series of liabilities to tax, non-resident shareholder companies are subject to the same treatment as resident shareholder companies."

The CJ has, in principle, rejected possible justifications[1710] as to introducing discriminatory taxation of outbound dividends not accepting either the need to The CJ has, in principle,

---

[1709] See case ECJ 8 November 2007, C-379/05 *Amurta SGPS v Inspecteur van de Belastingdienst/Amsterdam*, paras. 37-39. Similarly cases ECJ 14 December 2006, C-170/05 *Denkavit Internationaal BV and Denkavit France SARL v Ministre de l"Économie, des Finances et de l"Industrie*, paras. 34-35; or ECJ 12 December 2006, C-374/04 *Test Claimants in Class IV of the ACT Group Litigation v Commissioners of Inland Revenue*, paras. 68-70; ECJ 19 November 2009, C-540/07 *Commission of the European Communities v Italian Republic*, paras. 52-53; and CJ 3 June 2010, C-487/08, *European Commission v Kingdom of Spain*, para. 52-53.

[1710] Although it accepts the possibility of neutralizing the discriminatory treatment by taking into account the effects of a tax treaty between the source Member State and the Member State of the parent company receiving the dividends. However, the Court imposes certain requirements, requiring that the application of the tax treaty allows that the tax withheld at source under national legislation is set off against the tax due in the other Member State in the full amount of the difference in treatment arising under the national legislation. This means that the tax on dividends levied by the source Member State should be deducted in its entirety from the tax due in the Member State of residence of the recipient company. See ECJ 19 November 2009, C-540/07 *Commission of the European Communities v Italian Republic*, paras. 36-38; CJ 3 June 2010, C-487/08

rejected possible justifications[1711] as to introducing discriminatory taxation of outbound dividends not accepting either the need to preserve the balanced allocation of the powers to

---

European Commission v Kingdom of Spain, paras. 58-60 and 62-63; and CJ 20 September 2011, C-284/09, *European Commission v Federal Republic of Germany*, paras. 68-70. Therefore and according to the Court's case law the neutralization of the discriminatory treatment imposed by the Source Member State can only be accepted if provided in a tax treaty and as the method adopted to relieve double taxation is the credit method which allows the full offset of the tax withheld at source. From a conceptual perspective, this reasoning adopted by the Court can be criticised as, once again, it results from the adoption of an overall approach. In addition, the reasoning is not entirely clear as to whether the neutralization of the discriminatory treatment through the tax treaty is merely determined from a factual perspective or from a legal perspective. Under the first alternative, a case-by-case analysis should be performed in order to determine whether in the concrete situation the (ordinary) credit granted via the tax treaty is sufficient to compensate the tax withheld. The second alternative requires that the tax treaty allows compensating in all cases the tax withheld which implies providing a full credit in every case, situation which is by all means exceptional as most tax treaties typically provide for an ordinary tax credit. In cases such as *Commission v Spain* or *Commission v Germany* (C-284/09), the CJ merely stated that an ordinary tax credit is not always sufficient to neutralize the restriction. However, these cases do not entirely provide clarification as they refer to infringement procedures and do not deal with concrete situations. AG Kokott favoured this second alternating according to which a tax treaty should provide always for a full credit. In her Opinion delivered on 21 December 2011 in case C-498/10 *X NV v Staatssecretaris van Financiën*, para. 65 she stated that:

> "[…] such compensation can satisfy the requirements of EU law only if application of the Convention allows the effects of the difference in treatment under national legislation to be completely neutralised. That presupposes, in particular, that the compensation in the country of residence is granted even if the foreign income is liable to no, or less, tax there. It must therefore be granted regardless of the form of the tax levied on income by the country of residence."

[1711] Although it accepts the possibility of neutralizing the discriminatory treatment by taking into account the effects of a tax treaty between the source Member State and the Member State of the parent company receiving the dividends. However, the Court imposes certain requirements, requiring that the application of the tax treaty allows that the tax withheld at source under national legislation is set off against the tax due in the other Member State in the full amount of the difference in treatment arising under the national legislation. This means that the tax on dividends levied by the source Member State should be deducted in its entirety from the tax due in the Member State of residence of the recipient company. See ECJ 19 November 2009, C-540/07 *Commission of the European Communities v Italian Republic*, para. 36-38; CJ 3 June 2010, C-487/08 *European Commission v Kingdom of Spain*, para. 58-60 and 62-63; and CJ 20 September 2011, C-284/09, *European Commission v Federal Republic of Germany*, paras. 68-70. Therefore and according to the Court's case law the neutralization of the discriminatory treatment imposed by the Source Member State can only be accepted if provided in a tax treaty and as the method adopted to relieve double taxation is the credit method which allows the full offset of the tax withheld at source. From a conceptual perspective, this reasoning adopted by the Court can be criticised as, once again, it results from the adoption of an overall approach. In addition, the reasoning is not entirely clear as to whether the neutralization of the discriminatory treatment through the tax treaty is merely determined from a factual perspective or from a legal perspective. Under the first alternative, a case-by-case analysis should be performed in order to determine whether in the concrete situation the (ordinary) credit granted via the tax treaty is sufficient to compensate the tax withheld. The second alternative requires that the tax treaty allows compensating in all cases the tax withheld which implies providing a full credit in every case, situation which is by all means exceptional as most tax treaties typically provide for an ordinary tax credit. In cases such as *Commission v Spain* or *Commission v Germany* (C-284/09), the CJ merely stated that an ordinary tax credit is not always sufficient to neutralize the restriction. However, these cases do not entirely provide clarification as they refer to infringement procedures and do not deal with concrete situations. The clearest view on this subject (although not analysed by the CJ) was given

tax,[1712] the need to maintain the coherence of the tax system,[1713] the principle of territoriality,[1714] reduction of tax revenue[1715] or prevention of tax avoidance.[1716]

Therefore, the position of CJ as regards outbound dividends distributions is to consider that there is, in principle, a restriction to the fundamental freedoms when the source Member State imposes taxation on dividends distributed to non-resident shareholders subjecting to double taxation while applying domestic measures to prevent double taxation. This reasoning should be applicable in the context of claiming an individual benefit within the scope of a group taxation regime. Assuming that double taxation is eliminated in a group taxation scenario (limited to domestic companies) but not available for participations in foreign companies, the reasoning of the CJ as regards outbound dividend distributions should apply in similar terms to those cases.[1717]

---

by AG Kokott in her Opinion delivered on 21 December 2011 in case C-498/10 *X NV v Staatssecretaris van Financiën*, para. 65 when stating that:

> "[…] such compensation can satisfy the requirements of EU law only if application of the Convention allows the effects of the difference in treatment under national legislation to be completely neutralised. That presupposes, in particular, that the compensation in the country of residence is granted even if the foreign income is liable to no, or less, tax there. It must therefore be granted regardless of the form of the tax levied on income by the country of residence."

For an overview of this discussion see Bruno da Silva, "Tributação discriminatória de dividendos distribuídos por sociedades Portuguesas a acionistas residentes em Estados-Membros da UE: o caso Amorim Energia," in *Anuario do Ministerio dos Negocios Estrangeiros 2012: Jurisprudência anotada dos tribunais da União Europeia*.

[1712] See cases ECJ 8 November 2007, C-379/05 *Amurta SGPS v Inspecteur van de Belastingdienst/Amsterdam*, paras. 57-58; ECJ 19 November 2009, C-540/07 *Commission of the European Communities v Italian Republic*, para. 56; and CJ 20 September 2011, C-284/09 *European Commission v Federal Republic of Germany*, para. 78.

[1713] See cases ECJ 8 November 2007, C-379/05 *Amurta SGPS v Inspecteur van de Belastingdienst/Amsterdam*, paras. 48-50; ECJ 19 November 2009, C-540/07 *Commission of the European Communities v Italian Republic*, para. 56; CJ 20 September 2011, C-284/09 *European Commission v Federal Republic of Germany*, paras. 87-92.

[1714] ECJ 14 December 2006, C-170705 *Denkavit Internationaal BV and Denkavit France SARL v Ministre de l"Économie, des Finances et de l"Industrie*, paras. 32-33.

[1715] CJ 20 September 2011, C-284/09 *European Commission v Federal Republic of Germany*, paras. 83.

[1716] ECJ 19 November 2009, C-540/07 *Commission of the European Communities v Italian Republic,* paras. 58-60.

[1717] As previously referred an example may be the French legislation which introduced a 3% corporate income tax surcharge on corporate dividends which applies, *inter alia*, to dividends paid by a subsidiary to its parent company. However an exemption is applicable whenever dividends paid between companies that belong to a tax consolidation group that is limited to French tax resident companies and therefore excludes foreign shareholders. The outcome of these rules is that inter-company dividends paid between French resident companies which meet the group consolidation requirements are tax exempt, while if paid to non-French companies meeting all the requirements except tax residence in France are subject to this surcharge. Following a per-element approach and claiming the individual benefit as regards inter-company dividend distribution exemption may imply that this measure constitutes a restriction to the freedom of establishment.

As concerns inbound dividends, the Court has considered in the context of measures which aim at attenuating of eliminating double taxation as regards profits distributed by foreign subsidiaries located in other Member States the situation of resident parent companies with domestic situations when compared with resident parent companies with foreign subsidiaries is comparable whenever both domestic sourced and foreign sourced profits are both susceptible of being subject to multiple tax charges. Once again the CJ looks to the purpose of the measure – to mitigate the double taxation effects –and the fact that both domestic and foreign dividends received being in both cases exposed to such double taxation. This reasoning is clear from the *Lenz* case, where the Court affirmed and ultimately concluded that the legislation at stake was in breach of the fundamental freedoms:[1718]

> "30. […] the Austrian tax legislation is designed to attenuate the economic effects of double taxation of company profits arising from the taxation of company profits by way of corporation tax and the taxation of a shareholder who is a taxpayer, by way of income tax, on the same profits distributed in the form of dividends.
>
> 31. However, both revenue from capital of Austrian origin and such revenue originating in another Member State are capable of being the subject of double taxation. In both cases, the revenue is, in principle, subject first to corporation tax and then, to the extent to which it is distributed in the form of dividends, to income tax.
>
> 32. In relation to a tax rule designed to attenuate the effects of double taxation of the profits distributed by the company in which the investment is made, shareholders who are fully taxable in Austria and receive revenue from capital from a company established in another Member State are therefore in a situation comparable with that of shareholders who are likewise fully taxable in Austria but receive revenue from capital from a company established in Austria."

In this sense, the Court's reasoning is to consider that there is a breach of the fundamental freedoms when a measure which is intended to eliminate double taxation on distributed profits is not extended to foreign participations.[1719]

From the outset, the outcome should not be different in the context of claiming an individual benefit within the scope of a group taxation regime. Assuming that double taxation is eliminated in a group taxation scenario (limited to domestic companies) but not available for participations in foreign companies, the reasoning of the CJ referred to above

---

[1718] See, ECJ 15 July 2004, C-315/02, *Anneliese Lenz v Finanzlandesdirektion für Tirol*, paras. 30-32. This reasoning was followed, *inter alia*, in cases ECJ 7 September 2004, C-319/02 *Patri Manninen*, paras. 35-37; ECJ 12 December 2006, C-446/04, *Test Claimants in the FII Group Litigation v Commissioners of Inland Revenue*, para. 46; and ECJ 6 March 2007, C-292/04 *Wienand Meilicke, Heidi Christa Weyde and Marina Stöffler v Finanzamt Bonn-Innenstadt*, paras. 21-23,

[1719] See cases ECJ 12 December 2006, C-374/04 *Test Claimants in Class IV of the ACT Group Litigation v Commissioners of Inland Revenue*, para. 62; CJ 10 February 2011, Joined Cases C-436/08 and C-437/08 *Haribo Lakritzen Hans Riegel BetriebsgmbH and Österreichische Salinen AG v Finanzamt Linz*, para. 59; CJ, 13 November 2012, C-35/11 *Test Claimants in the FII Group Litigation v Commissioners of Inland Revenue, The Commissioners for Her Majesty's Revenue & Customs*, para. 53

should be applied in these cases. In both cases, the profits are susceptible of being subject to double taxation and therefore the measure to eliminate double taxation applicable within a tax group should be extended to identical participations in the context of foreign participations.

This was precisely the reasoning adopted by the Court in the *Group Steria*[1720] case. As previously analysed, the case dealt with the French group taxation regime – *regime d'integration fiscale* – and concretely, with a particular element of such regime: the full exemption in case of dividends received by French parent companies from participations in French subsidiaries belonging to a tax group. However, in the case of participations in foreign subsidiaries the exemption is limited to 95% of income received since 5% refers to deemed costs and expenses regarding such participations. The question pending before the CJ was precisely whether the freedom of establishment required extending that specific benefit of the French group taxation regime to participations in foreign subsidiaries. In this case, the CJ not only confirmed a per-element approach, it also clearly affirmed that inter-company dividend distributions of companies belonging to a group can be compared to a situation of companies not being part of such group. In the CJ's words:[1721]

> "The fact that the dividends received by a parent company which enjoy full tax exemption come from subsidiaries that are part of the tax-integrated group to which the parent company concerned also belongs does not amount to an objective difference in the situation of parent companies that would justify the difference in treatment identified (see, to that effect, judgments in *Papillon*, C-418/07, EU:C:2008:659, paragraphs 23 to 30; *X Holding*, C-337/08, EU:C:2010:89, paragraphs 21 to 24; and *SCA Group Holding and Others*, C-39/13 to C-41/13, EU:C:2014:1758, paragraphs 29 to 31). With regard to legislation such as that at issue in the main proceedings, which, through the neutralisation of the add-back of the proportion of costs and expenses to the parent company's profits, provides for dividends received to be fully exempt from tax, the situation of companies belonging to a tax-integrated group is comparable to that of companies not belonging to such a group in so far as, in each case, the parent company bears the costs and expenses related to its shareholding in the subsidiary, and, moreover, the profits made by the subsidiary and from which the dividends distributed are derived are, in principle, liable to be subject to economic double taxation or to a series of charges to tax (see, to that effect, judgments in *Haribo Lakritzen Hans Riegel and Österreichische Salinen*, C-436/08 and C-437/08, EU:C:2011:61, paragraph 113, and *Santander Asset Management SGIIC and Others*, C-338/11 to C-347/11, EU:C:2012:286, paragraph 42)."

In this context, the CJ case law has rejected the justifications invoked by the Member States.

The most common justification is the need to preserve the cohesion of the tax system since there would be an economic link between the taxation of the profits at the level of the

[1720] CJ 2 September 2015, C-386/14 *Groupe Steria SCA v Ministere des Finances et des Comptes publics*, para. 22.

[1721] CJ 2 September 2015, C-386/14 *Groupe Steria SCA v Ministere des Finances et des Comptes publics*, para. 22.

(resident) distributing company and the double taxation relief. However the CJ has rejected[1722] such arguments refusing the existence of such link since those charges incur over two separate taxpayers.[1723]

Similarly, the Court has also rejected a possible justification based on the need to safeguard the balanced allocation of the power to impose taxes between Member States. In essence, the CJ refers to the fact that the possible difference between domestic and cross-border situations arises from incoming dividends received by parent companies. In this respect, since the fiscal sovereignty concerns one and the same Member State, there are no two Member States involved that may jeopardize the balanced allocation of the powers to tax and therefore allow this justification to succeed.[1724]

19.6 Interest deduction limitation/Thin Cap rules

The application of interest deduction limitations is frequently disregarded within the context of group taxation regimes. However and since interest deduction limitations are potentially applicable to payments made between companies of cross-border groups, the question is whether such difference in treatment complies with the fundamental freedoms. In this regard, it is interesting to refer to the CJ's reasoning in the *Thin Cap GLO* case:[1725]

> "59. In that regard, it must be held, first, that the difference in treatment to which the subsidiaries of non-resident parent companies are, by virtue of legislation such as the legislation at issue in the main proceedings, subjected in comparison with subsidiaries of resident parent companies is capable of restricting freedom of establishment even if, from a tax perspective, the position of a multinational group of companies is not comparable to that of a group of companies, each of which is resident in the same Member State.
> 60. It is true that, within a group of companies, the risk that the financing of a subsidiary will be structured in such a way that profits are transferred to a State where they are subject to a lower rate of tax does not normally arise if all of the companies in question are subject, in the same Member State, to the same rate of tax. However, that does not mean that the rules adopted by a Member State for the specific purpose of dealing with the situation of

[1722] See, *inter alia*, ECJ 15 July 2004, C-315/02 *Anneliese Lenz v Finanzlandesdirektion für Tirol*,, para. 36. While it is acknowledged that in *Manninen* the Court adopted a broader view on the cohesion justification – by relaxing the direct link requirement - since it ultimately rejected this argument based on the proportionality test. In addition and in the meantime as analyzed before, the CJ has returned to its traditional formulation of the coherence justification.

[1723] In *Groupe Steria*, the CJ failed to discern a direct link deriving from the neutralisation of the transactions among group members. The advantage referred to the full exemption of dividends received and a tax disadvantage to the impossibility of the parent company to make provision for depreciation of holding in the subsidiary in the case of losses. The CJ pointed out in para. 35 of the judgment, that the application of the group taxation regime did not entail any disadvantage to the parent company.

[1724] See case CJ 2 September 2015, C-386/14 *Groupe Steria SCA v Ministere des Finances et des Comptes publics*, para. 29. Similarly, CJ 10 February 2011, Joined Cases C-436/08 and C-437/08 *Haribo Lakritzen Hans Riegel BetriebsgmbH and Österreichische Salinen AG v Finanzamt Linz*, para. 123.

[1725] See ECJ 13 March 2007, C-524/04 *Test Claimants in the Thin Cap Group Litigation v Commissioners of Inland Revenue*, paras. 59-61.

> multinational groups may not, in some cases, constitute a restriction on the freedom of establishment of the companies concerned.
> 61. Secondly, it must be held that a difference in treatment between resident subsidiaries which is based on the place where their parent company has its seat constitutes a restriction on freedom of establishment, since it makes it less attractive for companies established in other Member States to exercise freedom of establishment and they may, in consequence, refrain from acquiring, creating or maintaining a subsidiary in the Member State which adopts that measure."

Therefore, the difference in treatment which applies to a resident company, on the basis of the registered office of the related group company in another Member State constitutes a restriction to the freedom of establishment.[1726] As regards possible justifications the CJ has accepted in the *Itelcar* case that:[1727]

> "By providing that certain interest paid by a resident company to a company established in a non-member country, with which it has special relations, is not to be deductible for the purposes of determining the taxable profit of that resident company, rules such as those at issue in the main proceedings are capable of preventing practices the sole purpose of which is to avoid the tax that would normally be payable on profits generated by activities undertaken in the national territory. It follows that such rules are an appropriate means of attaining the objective of combating tax evasion and avoidance."

The underlying concept is that companies within a group have the right to structure their affairs as they wish meaning that they should be allowed to finance their subsidiaries by means of equity or debt.[1728] However, this possibility reaches its limit when the group choice amounts to abuse of law. However, the acceptance of this justification depends on its formulation and application. Notably it will have to comply with the proportionality test. In this regard, the case law of the CJ confirms that in principle legislation whish sets interest deduction limitations may in principle be a proportionate anti-abuse measure. For that purpose, and similar to transfer pricing rules, it is required that the legislation at stake sets out reasonable criteria against which they will assess compliance of a transaction with the arm's length principle, and in case of non-compliance with these criteria for them to presume that the transaction is abusive, subject to proof to the contrary. Interest deduction limitation rules should, on each occasion give the taxpayer an opportunity, without

[1726] See cases CJ 3 October 2013, C-282/12 *Itelcar – Automoveis de Aluguer, Lda, v Fazenda Publica*, para. 31; ECJ 13 March 2007, C-524/04 *Test Claimants in the Thin Cap Group Litigation v Commissioners of Inland Revenue*, para. 62; and ECJ 12 December 2002, C-324/00 *Lankhorst-Hohorst GmbH v Finanzamt Steinfurt*, para. 32.

[1727] See CJ 3 October 2013, C-282/12, *Itelcar – Automoveis de Aluguer, Lda, v Fazenda Publica*, para. 35. See also ECJ 13 March 2007, C-524/04 *Test Claimants in the Thin Cap Group Litigation v Commissioners of Inland Revenue*, para. 77.

[1728] As regards no withholding taxes on interest (as well as royalties) intra-group payments - and similarly to the reference as regards dividends - from the perspective of the per-element analysis, not extending this specific benefit to cross-border groups, in principle, will not lead to disadvantageous treatment due to the existence of other EU law instruments – the Interest & Royalty Directive – which will also lead to the same result of exempting these payments as the Directive is triggered as from the moment that there is a participation of at least 25% which is a lower threshold that the one applicable to tax groups.

subjecting him to undue administrative constraints, to provide evidence of any commercial justification that there may have been for that transaction.[1729] Similarly, where the transaction in question goes beyond what the companies concerned would have agreed on an arm's length basis, the corrective tax measure must, in order not to be considered disproportionate, be confined to the part that exceeds that which would have been agreed on that basis.[1730] This means that legislation on interest deduction limitations applicable to cross-border intra-group payments may be justified if the adjustments are limited to the amounts which go beyond what would have been agreed upon at arm's length and the taxpayer is given the opportunity to provide evidence showing that the transactions in questions have commercial justification. However, when for example, it uses a single fixed criterion to be applied in all cases – such as a fixed debt-equity ratio – which does not allow other circumstances to be taken into account will not be considered as proportionate.

19.7 Intra-group transfer of services

The taxation of intra-group services due to the impossibility to apply for a cross-border tax group would also constitute discrimination in contravention with the freedom of establishment. In particular, this implies a tax burden for the company of the group rendering the service that would not be taxed over such transaction considering the tax integration achieved by forming a group.[1731]

The Court has already considered that there is a discriminatory taxation as regards intra-group services when there is a disadvantageous treatment compared with a purely domestic situation.[1732] Admittedly there is a difference between the application of a tax group regime which entails no taxation of the intra-group services and the transfer pricing adjustments within the context of the existing case-law. But the fact is that the justifications accepted by the CJ outside the context of tax groups, fit entirely when dealing with intra-group services in a cross-border perspective. In fact, it is worth recalling the *SIAT* case where the Court held that:[1733]

> "36. In that regard, the Court has already held that the prevention of tax evasion is an overriding reason relating to the public interest, capable of justifying a restriction on the exercise of freedom of movement guaranteed by the Treaty.

[1729] See cases CJ 3 October 2013, C-282/12 *Itelcar – Automoveis de Aluguer, Lda, v Fazenda Publica*, para. 37; ECJ 17 January 2008, C-105/07 *Lammers & Van Cleeff NV v Belgische Staat*, para. 29; and ECJ 13 March 2007, C-524/04 *Test Claimants in the Thin Cap Group Litigation v Commissioners of Inland Revenue*, para. 82.

[1730] CJ 3 October 2013, C-282/12 *Itelcar – Automoveis de Aluguer, Lda, v Fazenda Publica*, para. 38; and ECJ 13 March 2007, C-524/04 *Test Claimants in the Thin Cap Group Litigation v Commissioners of Inland Revenue*, para. 83.

[1731] CJ 25 February 2010, C-337/08 *X Holding B.V. v Staatssecretaris van Financiën*, para. 18.

[1732] CJ 5 July 2012, C-318/10 *Société d"investissement pour l'agriculture tropicale SA (SIAT) v Belgian State*, paras. 27-29.

[1733] CJ 5 July 2012, C-318/10 *Société d"investissement pour l'agriculture tropicale SA (SIAT) v Belgian State*, paras. 36-47.

37. By the same token, it has been held that a restriction on the exercise of freedom of movement within the European Union can be justified in order to safeguard the allocation between the Member States of the power to impose taxes.

38. First, regarding the prevention of tax evasion, it should be noted that the mere fact that a resident taxpayer uses the services of a non-resident service provider cannot provide a sound basis for a general presumption of abusive practices and justify a measure which compromises the exercise of a fundamental freedom guaranteed by the Treaty.
[…]

40. In order for a restriction on the freedom to provide services to be justified by the need to combat tax evasion and avoidance, the specific objective of that restriction must be to prevent conduct consisting in the creation of wholly artificial arrangements which do not reflect economic reality, with a view to escaping the tax normally due on the profits generated by activities carried out on the national territory.

41. […] is intended to prevent conduct which consists in reducing the taxable amount applicable to resident taxpayers by paying for services which were never actually provided, with the sole aim of escaping the tax normally due on the profits generated by activities carried out on the national territory.
[…]

45. […] as regards the balanced allocation between Member States of the power to tax, it should be recalled that such a justification is acceptable, in particular, where the system in question is designed to prevent conduct capable of jeopardising the right of a Member State to exercise its tax jurisdiction in relation to activities carried out in its territory.

46. Conduct of the kind described in paragraph 41 above is such as to jeopardise the right of a Member State to exercise its tax jurisdiction in relation to the activities carried out by resident taxpayers in its territory and to undermine the balanced allocation between Member States of the power to impose taxes.

47. Accordingly, […] enables the État Belge to exercise its tax jurisdiction in relation to the activities carried out in its territory, that legislation is such as to facilitate the protection of the balanced allocation between Member States of the power to impose taxes."

Therefore, the taxation of intra-group services should be accepted. Although there is a discriminatory treatment as regards purely domestic situations, that is justified by the objectives of preserving the balanced allocation of the powers to tax between Member States combined with the need to prevent tax evasion. In fact, this taxation can be justified by the need to tax the income in the Member State where the activities originated as well as prevent that otherwise such could be (artificially) to another Member State escaping the taxation normally due on the profits generated by activities carried out on the national territory. Eventual adjustments made to the pricing of those services as between the

different group members would be subject to transfer pricing adjustments subject to terms and conditions set forth in the case law referred above.

19.8 Cross-border loss relief

Another opportunity to invoke the per-element approach and claim a benefit of a tax group in a cross-border situations, is the case of a foreign subsidiary which has exhausted the possibility of using those losses in the respective State of residence. In *Marks & Spencer,* the Court has accepted cross-border loss relief in the context of finality of losses. The *Marks & Spencer* exception has already been dealt extensively throughout this thesis.

Following the judgment of *X Holding,* the Court had the opportunity to reaffirm and clarify – notably in *A Oy* and *Commission v UK* – that the *Marks & Spencer* exception was still applicable. Therefore, this particular element of a group taxation regime and the possibility to claim the deduction of foreign losses should be possible whenever the requirements of finality of losses have been met.

19.9 Interim Conclusions

In the preceding Chapter, it was concluded that the CJ favoured a per-element approach. Therefore, it may be possible for each taxpayer to invoke separate elements of a group taxation regime in a cross-border situation. This requires testing each individual element against the TFEU freedoms.

Absent any previous decision in the specific context of group taxation, this assessment relies on the application of the previous case-law by analogy. This was precisely the approach followed by the Court in *Groupe Steria* (for example. by relying on the reasoning developed in the *Haribo* case) and should be transposed identically when dealing with other individual benefits of a tax group

Chapter 20

Other (possible) situations involving discriminatory treatment of tax groups

20.1 Introduction

The analysis throughout the preceding chapters has revealed the likely existence of multiple situations giving rise to discriminatory taxation taking into account the interpretation of the case law of the CJ. In the present Chapter, some further cases are discussed of other possible situations which may give rise to a discrimination, considering the differences provided by national legislations as regards tax groups being challenged based on the treatment given to domestic and cross-border scenarios involving tax groups[1734].

20.2 Dual resident companies

In principle, residence of companies is triggered by the fact that a company is either incorporated or has its place of effective management in a particular State.[1735] However, some Member States may have a double requirement that in order for a company to be a group member it must have both the company seat and the place of effective management located in the same Member State. This leads to a situation in which a company may not be part of a tax group of a Member State if its registered office is abroad, even if its place of effective management is located in that Member State.

[1734] The reasoning followed by the CJ in the *Steko* case can be applied *mutatis mutandis* to the differences between domestic and cross-border group taxation regimes. In this regard see ECJ 22 January 2009, C-377/07, *Finanzamt Speyer-Germersheim v STEKO Industriemontage GmbH*, para. 33 where the Court stated that:

> "[…] The application of different taxation systems to a resident company depending on whether it has holdings in resident or non-resident companies cannot be a valid criterion for assessing the objective comparability of their situations and, therefore, for identifying an objective difference between them. It is precisely the application of different taxation systems that is responsible for the difference in treatment, in respect of which it must be assessed whether it is justified or not."

[1735] An example of this issue gave rise to the infringement procedure against Germany regarding the application of the *Organschaft*: IP/12/283 of 22 March 2012. In the meantime, this infringement procedure has been closed as Germany amended its legislation.

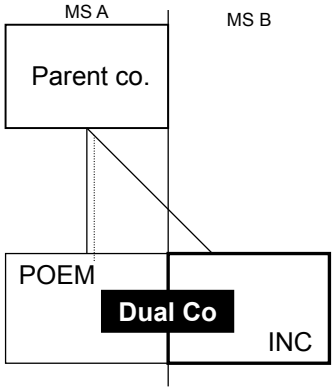

In practice, such company, irrespective of being fully liable to tax in the Member State of the parent company, it is still deprived of the tax benefits of the tax group regime which is available to domestic incorporated companies. This different treatment between a domestic incorporated and a foreign incorporated company leads to a breach of the freedom of establishment. In this regard it is worthwhile recalling the Court's words:[1736]

> "[…] to accept that the Member State of establishment may freely apply different treatment solely because the registered office, central administration or principal place of business of a company is situated in another Member State would deprive Article 43 EC of its substance."

It should be underscored that this case does not deal with the question of cross-border group taxation as the effective residence[1737] of the group member is in the same State as the parent company.

As a consequence and as regards possible justifications, it is hardly conceivable that any could succeed. A justification based on the need to preserve the balanced allocation of the powers to tax between Member States would not proceed since the CJ clarified both in *Papillon* and *Philips Electronics UK* cases[1738] that such justification is not relevant when one is referring to situations in one and the same Member State. Similarly, the justification based on the double use of losses since not only is this justification auxiliary to the balanced allocation of the powers to tax but also a Member State cannot successfully invoke this justification whenever the losses were incurred in its own jurisdiction. Lastly, a possible justification based on the need to prevent tax avoidance would also be rejected considering

---

[1736] See cases ECJ 13 December 2005, C-446/03 *Marks & Spencer plc v David Halsey (Her Majesty's Inspector of Taxes)*, para. 37; ECJ 12 December 2006, C-374/04 *Test Claimants in Class IV of the ACT Group Litigation v Commissioners of Inland Revenue*, para. 43; and ECJ 18 July 2007, C-231/05 *Oy AA*, paras. 56 and 58, para. 30.

[1737] Assuming already the application of the tie-breaker rule under a possible tax treaty modelled on the OECD Model Tax Convention.

[1738] See cases ECJ 27 November 2008, C-418/07 *Société Papillon v Ministére du Budget, des Comptes Publics et de la Fonction Publique,* paras. 37-40 and CJ 6 September 2012, C-18/11 *The Commissioners for Her Majesty's Revenue & Customs v Philips Electronics UK Ltd*, paras. 25-26.

the judgment in the *SCA Holding Group* case where the Court acknowledged[1739] that relying independently on this justification is only possible whenever the legislation at stake is aimed at tackling wholly artificial arrangements which, in this situation, it would clearly not be the case.

Considering the conclusions reached above in light of the cumulative requirement for group membership - place of effective management and place of incorporation in the same Member State – it is interesting to analyse the reverse situation when the company claiming group membership is incorporated in the same Member State of the group but has its place of effective management in a different Member State. Therefore, the issue is whether there is an infringement of Article 49 TFEU by the fact that a company which has a registered office in the same Member State as the parent company but has its place of effective management in another Member State is denied the possibility to be included in a tax group.

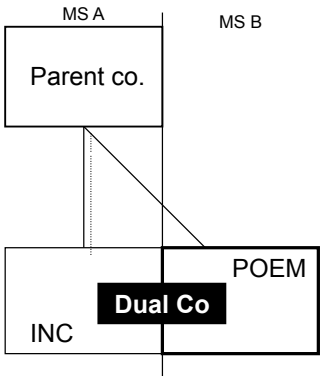

As regards the implication of Double Tax Treaties the Court has held that:[1740]

> "30. […] It flows, in the absence of any unifying or harmonising measures adopted in the Community context under, in particular, the second indent of Article 220 of the Treaty, from the contracting parties" competence to define the criteria for allocating their powers of taxation as between themselves, with a view to eliminating double taxation.

[1739] CJ 12 June 2014, Joined Cases C-39/13, C-40/13 and C-41/13, *Inspecteur van de Belastingdienst Noord/kantoor Groningen v SCA Group Holding BV (C-39/13), X AG, X1 Holding GmbH, X2 Holding GmbH, X3 Holding BV, D1 BV, D2 BV, D3 BV, v Inspecteur van de Belastingdienst Amsterdam (C-40/13) and Inspecteur van de Belastingdienst Holland- Noord/kantoor Zaandam v MSA International Holdings BV, MSA Nederland BV (C-41/13)*, para. 42. Concurrently stressing this point, see Emma Hardwick and Michael McGowan, "SCA Group Holding BV, X AG and Others and MSA International Holdings BV and another: the CJEU considers the impact of EU Law on the scope of tax groups or fiscal unities", *British Tax Review* 5 (2014), p. 536.

[1740] ECJ 12 May 1998, C-336/96 *Mr and Mrs Robert Gilly v Directeur des services fiscaux du Bas-Rhin*, paras. 14 and 31-32.

> 31. Nor, in the allocation of fiscal jurisdiction, is it unreasonable for the Member States to base their agreements on international practice and the model convention drawn up by the OECD.
> […]
>
> 34. […] the tax treatment of the taxpayers concerned is favourable or unfavourable is determined not, strictly speaking, by the choice of the connecting factor but by the level of taxation in the competent State, in the absence of any Community harmonisation of scales of direct taxation."

According to the Court, it is then in principle irrelevant as to which criteria Member States apply to divide their taxing powers as long as they do not discriminate cross-border situations when compared with domestic situations[1741]. In the case a Tax Treaty applies,[1742] likely the Member State of parent company will loose its taxing rights as regards the profits of the subsidiary.[1743] From the reasoning of the CJ in he *National Grid Indus* case,[1744] it can be inferred that the fact that a dual resident company which is no longer subject to tax in its State of incorporation due to its place of effective management being located in another Member State and therefore, the Member State of incorporation looses tax jurisdiction in respect of income from the company's activities, it is not relevant for determining whether there is a restriction to the freedom of establishment while being relevant for the justification level.[1745] Therefore, where a Member State allows a parent company to form a tax group with its subsidiary when this latter company was incorporated and has its place of effective management in that Member State, but denies such possibility if the same subsidiary has its place of effective management in another Member State, this amounts to a disadvantage in breach of the freedom of establishment.

As regards possible justifications, it is relevant to determine what the tax status of the subsidiary will be in the respective States of incorporation. While that company in principle is considered to be resident for tax purposes domestically, the State of the parent company may loose taxing rights pursuant to the application of the tie-breaker rule in a relevant tax treaty, in which case, the presence of the subsidiary in the state of incorporation will likely

---

[1741] See Ben J.M. Terra & Peter J. Wattel, *European Tax Law*, Fiscale Handboeken no. 10, 2nd edition Kluwer Detenver (2012), p. 954.

[1742] Assuming the application of the tie-breaker rule under a possible tax treaty modelled on the OECD Model Tax Convention. Otherwise and in the case no tax treaty is in force, the outcome would be the same as in the previous scenario since the Member State of the parent company would maintain the right to tax the subsidiary on worldwide income.

[1743] Except as regards possible profits (and losses) that may be attributed to an eventual PE of the subsidiary in the Member State of the parent company.

[1744] CJ 29 November 2011, C-371/10 *National Grid Indus BV v Inspecteur van de Belastingdienst Rijnmond/kantoor Rotterdam*, paras. 24-33.

[1745] See R. Kok, "Exit Taxes for Companies in the European Union After National Grid Indus BV", *EC Tax Review* 4 Kluwer Law International (2012), p. 202. In fact, the possibility to rely on the freedom of establishment exists in case the subsidiary maintains its legal existence in the respective state of origin.

be considered as a PE in that State with the limitation of the power to tax the profits which are attributed to that PE.[1746]

That being the case, I am of the view that there are two different situations to be considered in this case. First of all, the profits attributable to the Member State of the parent company according to Article 7 and any other income which that State is allowed to tax pursuant the effect of tie-breaker rule of the applicable tax treaty should be allowed to be included in the tax group regime. Conversely the fact that the Member State of the parent company looses the tax jurisdiction on the worldwide profits due to the application of the tie-breaker rule implies that any income other than the above referred to is to be taxed exclusively by the State where the place of effective management is located. Therefore, the reasoning in the case law of the CJ in the *Marks & Spencer* and *X Holding* cases would be applicable in this scenario[1747] as regards, for instance, taking into account losses which are incurred in a State other than the one where the profits were generated. Depending on the tax group benefit at stake, the justifications could rely on the need to preserve the balanced allocation of the powers to tax, prevent tax avoidance and the double use of losses. Also the proportionality test would scrutinize the existing of less restrictive measures that barred the possibility to benefit from the tax group regime.

[1746] The tax treaty imposed restriction pursuant the application of the tie-breaker rule implies that the taxation of the subsidiary in the respective State of incorporation generally (with the exceptions of countries such as UK or Canada) does not affect the subsidiary status as a resident taxpayer in the respective domestic laws, while affecting the tax treaty residence of the subsidiary for the purposes of claiming treaty benefits with tax treaties concluded with any other States, following the 2008 amendments to the OECD Model Tax Convention. In addition, the tax treaty imposed restrictions pursuant to the application of the tie-breaker rule have effect on the fact that the State of the incorporation may tax that subsidiary only on the items of income which the tax treaty concluded between the State of incorporation and the State the place of effective management of the subsidiary leaves to the "other State" (i.e. the State of incorporation). These income items are generally of the same nature as the income items on which the State of incorporation taxes a non- resident under its domestic tax law. See on this, Kees van Raad, "2008 OECD Model: Operation and Effect of Article 4 (1) in Dual Residence Issues under the Updated Commentary", *Bulletin for International Taxation* May/June IBFD (2009), pp. 186-187.

[1747] Diferently see Thomas Kollruss, "Must a Dual Resident Subsidiary Be Included in a Fiscal Unity on the Basis of Primary EU Law? The Example of Germany and Comparative Analysis of the EU and EEA Member States", 68 *Bulletin for International Taxation* 4/5 IBFD (2014), p. 255 and 257. Kollruss considers that even if the Member State of the parent company power to tax ceases to exist due to the subsidiary's place of effective management in another Member State as a result of a tax treaty tie-breaker rule, the right to tax the subsidiary's profit repatriation by the parent company's state of residence at the parent company's residence level remains unchanged. I believe these arguments to be irrelevant. In *Marks & Spencer* the UK taxes the profits distributed by the subsidiaries at the level of the parent company and still that was irrelevant for the outcome of the case. The relevant issue is that the Member State of the parent company has looses its taxing rights as regards the subsidiary with the exception of any profit which might be attributable to an eventual PE in that Member State.
See ECJ 13 December 2005, Case C-446/03, *Marks & Spencer plc v David Halsey (Her Majesty's Inspector of Taxes)*, para. 26.

20.3 Differences between domestic and cross-border tax groups' regimes

As analysed in Part II, a very limited number of Member States provide for both domestic and cross-border tax group regimes. An interesting feature is the fact that those Member States did not opt for having the same regime being applicable for both domestic and cross-border scenarios. Instead, they opted for having a separate regime or set of rules for cross-border tax groups which works in parallel to the existing regime applicable to domestic groups.
Therefore, Member States provide two different regimes or two different sets of rules that apply depending whether it is a tax group formed only by domestic entities or by foreign entities. Therefore, it becomes interesting to test how some of those different rules that apply under a cross-border tax regime may comply with the freedom of establishment when compared with the rules applicable to a domestic tax group.

20.3.1 Use of foreign losses

One example refers to the use of foreign losses[1748]. Under a (domestic) group taxation regime tax losses of group members may be set off against the taxable profits of other group members. The group members which are resident in the Member State allocate their total income – including losses - to the parent company irrespectively of the percentage of the participation. Differently in case of foreign subsidiaries there are limitations as to the use of the amount of losses. Those limitations refer to either the losses being considered in the percentage of the participation or its used being limited to a percentage of the overall income of the group members subject unlimited tax liability in the respective Member State. The question is naturally whether these limitations are in line with the freedom of establishment.

As stated, the CJ has already affirmed[1749] that the possibility to form a tax group and in particular to offset profits and losses among the group members constitutes a cash flow advantage which, if it is not available to subsidiaries located in other Member States constitutes a restriction to the freedom of establishment. In that regard, the advantage which is granted to group members which are resident in the same Member State of being allowed to deduct the total amount of losses irrespectively of the percentage of the participation while limitations as to the proportion and amount are imposed on the use of losses incurred by foreign subsidiaries leads to a disadvantageous treatment which is dependent on the location of those subsidiaries.

[1748] An example is the Austrian group taxation regime. See Sabine Kanduth-Kristn, Sarah Gregori and Ernst Komarek, "Amendments to Group Taxation Regime", 54 *European Taxation* 6 IBFD (2014), p. 262.
[1749] ECJ 13 December 2005, C-446/03 *Marks & Spencer plc v David Halsey (Her Majesty's Inspector of Taxes)*, para. 32

The most likely conclusion that this difference in treatment between domestic and foreign losses incurred constitutes indeed a restriction to the freedom of establishment, the question turns to an analysis of the possible justifications. The Court has, within the context of cross-border losses, accepted the justifications based on the need to preserve the balanced allocation of the powers to tax, the double use of losses and the risk of tax avoidance in order to justify the difference in treatment between domestic and cross-border constellations. It is hardly conceivable how these justifications could succeed in order to justify a limitation on the amount of cross-border loss relief. It does not appear to have a significant increased risk to the need to preserve the balanced allocation of the powers to tax, the double use of losses or tax avoidance, to allow a full deduction of the losses similar to purely domestic situations. Even assuming that such justifications could be accepted in this context, a deduction on the full amount of the losses, should always occur upon verification of the conditions of the *Marks & Spencer* no possibilities test.

20.3.2 Limits on the inclusion of group members

Another example concerns the *limitation* of the inclusion as regards *foreign subsidiaries*. It was already analysed that the CJ considers that the limitation of the perimeter of a group to purely domestic situations while excluding foreign subsidiaries constitutes a prima facie restriction to the freedom of establishment.
The issue now to be subject to scrutiny concerns the limitation of the tier of participating subsidiaries in a cross-border tax group. Concretely, this concerns the Austrian regime which limits the cross-border group members to first tier subsidiaries. Therefore, the participation in a cross-border tax group is limited to the first tier of foreign subsidiaries while foreign subsidiaries of foreign group members are excluded. In a purely domestic tax group, such limitation does not exist as potentially all subsidiaries in multiple tiers of participation may be included. This means that, for example, it is possible to form a group between a domestic parent company, a domestic subsidiary and a foreign-subsidiary while if the group parent company has a direct participation in a foreign subsidiary, it will not be possible to include the foreign sub-subsidiary. The effect is naturally that foreign sub-subsidiaries are placed at a disadvantage in comparison with domestic sub-subsidiaries. Therefore, the question arises whether an existing cross-border group taxation regime may introduce further restrictions as regards its foreign group members. It seems clear that this regime leads to a less favourable treatment of the parent company for the reason that it has decided to establish a subsidiary abroad as, in that case, losses incurred by the sub-subsidiaries cannot be used. Thus such limitation should be considered as a prima facie breach to the freedom of establishment.[1750]

[1750] See, *inter alia*, cases ECJ 13 December 2005, C-446/03 *Marks & Spencer plc v David Halsey (Her Majesty's Inspector of Taxes)*, paras. 31-34; ECJ 18 July 2007, C-231/05 *Oy AA*, paras. 36-40; and CJ 25 February 2010, C-337/08 *X Holding B.V. v Staatssecretaris van Financiën*, paras. 19-23.

The question turns to analyse whether such restriction can be justified. Likely once again the analysis would turn to the accepted justification as regards cross-border losses: the need to preserve the balanced allocation of the powers to tax, the double use of losses and the risk of tax avoidance. In particular, these justifications have been accepted as valid within the context of a claim to providing an asymmetric treatment – deduction of foreign losses without taxation of the respective profits – as regards cross-border situations. While arguably these justifications could also proceed in this scenario, the question is how relevant they could be considering that for first-tier subsidiaries there is already an asymmetric treatment provided under the existing legislation. Furthermore even if these justifications were accepted, two important issues should be taken into account as regards the proportionality test. First, in *Marks & Spencer,* both the taxpayer and the Commission argued[1751] a possible adoption of less restrictive measures such as a deduction-recapture mechanism. The CJ disregarded such argument considering that the UK did apply such mechanism and '*such measures in any event require harmonisation rules adopted by the Community legislature"*. In the case of a Member State which already applies a deduction-recapture mechanism for first-tier foreign subsidiaries it should arguably extend such similar mechanism to lower-tier foreign subsidiaries as an existing less restrictive measure. Second, and even if such argument would not succeed, in any event final losses incurred by the lower-tier subsidiaries should be allowed under the *Marks & Spencer* reasoning. In this regard it is relevant to recall that the factual context of *Marks & Spencer* was precisely the claim of cross-border loss relief of second-tier subsidiaries that were held by the UK parent company through an intermediary company located in the Netherlands. Ultimately, at least the factual circumstances[1752] in *Marks & Spencer* would match with a claim for the relief of final losses incurred by the sub-subsidiaries.

20.3.3 Minimum life span

Another example as regards the difference treatment between domestic and cross-border tax groups concerns the minimum life span[1753]. Typically cross-border tax groups have a minimum life span, which is longer than the one applicable to purely domestic groups. This places domestic groups in an advantage as compared with cross-border ones as to the flexibility that is granted in a domestic scenario to enter or leave the application of the group taxation regime depending on whether it is favourable or not to enter into consolidation. The exclusion of such an advantage in relations between a resident parent company and subsidiaries established in another Member State could be considered as making the establishment in the latter State less attractive and hence, to deter the company from setting up subsidiaries there thus, constituting a restriction to the freedom of establishment.

[1751] ECJ 13 December 2005, C-446/03 *Marks & Spencer plc v David Halsey (Her Majesty's Inspector of Taxes)*, para. 54.
[1752] Similarly see George Kofler, "Marks & Spencer: Bedingte Verpflichtung zur Hereinnahme von Verlusten ausländischer Tochtergesellschaften", *ÖStZ* 2006/87, p. 54.
[1753] See for a general analysis 6.8.2.4 *supra*.

As regards possible justifications, the Court has frequently accepted within the context of cross-border group taxation that the need to safeguard the allocation of the power to tax between the Member States, that may be capable of justifying a difference in treatment where the system in question is designed to prevent conduct liable to jeopardise the right of a Member State to exercise its powers of taxation in relation to activities carried on in its territory.
In particular, the flexibility to enter and leave the tax group regime has in fact appeared to be one of the crucial factors for undermining the balanced allocation of the powers to tax between Member States (probably with an element of tax avoidance) and it was a relevant element in the judgment in the *X Holding* case as to the general question whether the Netherlands had to extend its fiscal unity regime to foreign subsidiaries. The Court held that:[1754]

> "Since the parent company is at liberty to decide to form a tax entity with its subsidiary and, with equal liberty, to dissolve such an entity from one year to the next, the possibility of including a non-resident subsidiary in the single tax entity would be tantamount to granting the parent company the freedom to choose the tax scheme applicable to the losses of that subsidiary and the place where those losses are taken into account."

And this fact was stressed in the *A Oy* case when the Court stated that:[1755]

> "With respect to the proportionality of the obstacle to freedom of establishment, it must be observed, first, that granting the parent company the possibility of taking into account the losses of its non-resident subsidiary in connection with a cross-border merger is not a priori such as to allow the parent company to choose freely from one year to the next the tax scheme applicable to its subsidiaries" losses."

Therefore, a minimum life span to cross-border tax groups whereas such being not applicable to domestic tax groups, would likely constitute a justified restriction to the freedom of establishment taking into account that it could prevent the possibility to freely choose on a yearly basis the tax scheme applicable as regards the foreign subsidiaries of the group.

20.3.4 Optional or mandatory group perimeter

A further example concerns the optional or mandatory *group perimeter*. While for a cross-border tax group it is mandatory to include all foreign entities (all in/all out approach), in a domestic constellation it is possible to determine the perimeter of the group by cherry-picking its members.[1756] Arguably the impossibility to delimit the group perimeter in a cross-border situation while possible in a domestic tax group constitutes a disadvantage in breach of the freedom of establishment. Arguably, the parent company is placed at a disadvantage when compared with pure domestic groups since due to the place where it

[1754] CJ 25 February 2010, C-337/08 *X Holding B.V. v Staatssecretaris van Financiën*, para. 31.
[1755] CJ 21 February 2013, C-123/11 *A Oy*, para. 48.
[1756] An example is found in the case of Italy. See 6.4.1 *supra*.

decided to invest is obliged to include all the companies of the group. Thus, such disadvantage constitutes a restriction to the freedom of establishment.

As regards possible justifications, it is interesting to note the CJ's reasoning in the *Oy AA* case when considering that:[1757]

> "56. To accept that an intra-group cross-border transfer, such as that at issue in the main proceedings, may be deducted from the taxable income of the transferor would result in allowing groups of companies to choose freely the Member State in which the profits of the subsidiary are to be taxed, by removing them from the basis of assessment of the latter and, where that transfer is regarded as taxable income in the Member State of the parent company transferee, incorporating them in the basis of assessment of the parent company. That would undermine the system of the allocation of the power to tax between Member States because, according to the choice made by the group of companies, the Member State of the subsidiary would be forced to renounce its right, in its capacity as the State of residence of that subsidiary, to tax the profits of that subsidiary in favour, possibly, of the Member State in which the parent company has its establishment […]
> […]
> 58. Concerning, finally, the prevention of tax avoidance, it must be acknowledged that the possibility of transferring the taxable income of a subsidiary to a parent company with its establishment in another Member State carries the risk that, by means of purely artificial arrangements, income transfers may be organised within a group of companies towards companies established in Member States applying the lowest rates of taxation or in Member States in which such income is not taxed."

Both the above justifications applied by the Court could apply, *mutatis mutandis*, to the mandatory group perimeter. The possibility to freely choose which companies to include in the group could undermine the balanced allocation of the powers to tax due to the flexibility to include only the companies which have incurred losses and removing from the group the ones which are profitable. Such justification would likely be combined with the risk of tax avoidance as cherry-picking group members could allow groups to determine where to have the respective profits taxed as ultimately, it would be possible to include only foreign subsidiaries which were loss making leading to reduced or non-taxation in the Member State of the parent company of the group.[1758]

[1757] ECJ 18 July 2007, C-231/05 *Oy AA*, paras. 56 and 58.

[1758] This reasoning appears to have motivated the amendment to the Danish rules on joint taxation in 2005. Under the former regime, not all foreign companies were required to be included in the group perimeter. That apparently granted the possibility for certain groups to cherry-pick only unprofitable subsidiaries while leaving profitable companies out, avoiding therefore Danish taxation. See Arne Mollin Ottosen and Michael Norremark, "Denmark: Joint Taxation", in D. Weber and B. Da Silva (eds) *From Marks & Spencer to X Holding: The Future of Cross-Border Group Taxation,* EUCOTAX Series on European Taxation Vol. 29, Wolters Kluwer (2011), pp. 153-154.

20.3.5 Depreciation of goodwill

Goodwill depreciation constitutes a cash-flow advantage for parent companies to deduct, during a certain period of time and in accordance with predetermined criteria, the goodwill as regards holdings from group members. It may occur however that in the context of a tax group such advantage is available for holdings acquired in domestic companies while an identical benefit is denied in case of foreign companies. Such difference in treatment between domestic group taxation and cross-border group taxation scenarios constitutes a breach to the freedom of establishment.

This was precisely the factual background in the *Finanzamt Li*nz case[1759]. The case dealt with the Austrian group taxation regime and more specifically, with the impossibility to depreciate goodwill as regards participations in foreign companies while such benefit was available in the context of domestic holdings. Austrian applies a group taxation regime for both domestic and cross-border situations with different features inter alia the consolidation of results and the depreciation of goodwill[1760].

As expected the CJ confirmed that differences between domestic and cross-border group situations as regards the amortization of goodwill amount to a restriction of the freedom of establishment. The Court focused its analysis on the particular aim pursued by the amortization of goodwill – ensure equal treatment between asset deal and share deal - as regards shareholdings, considering that both domestic and cross-border situations were comparable as regards the objective pursued by such measure.

In what concerns to possible justifications the Court rejected both the balanced allocation of the powers to tax and the cohesion of the tax system. Regarding the first justification the group taxation regime at stake provided for depreciation of goodwill irrespectively of whether the company in which the holding is acquired makes a profit or loss. Therefore and since the granting of the advantage was not related with taxing profits or losses there was no issue as regards the allocation of the powers to tax[1761].

Concerning the cohesion of the tax system the Court rejected the existence of a direct link between the tax advantage arising from the depreciation of the good will and the tax attribution to the parent company of the results of the resident group members. First of all, it took into account the fact that the advantage of goodwill depreciation was granted

[1759] CJ 6 October 2015, C-66/14, *Finanzamt Linz v Bundesfinanzgericht, Außenstelle Linz*.
[1760] See CJ 6 October 2015, C-66/14, *Finanzamt Linz v Bundesfinanzgericht, Außenstelle Linz*. As referred in paragraph 12, in case of a domestic perimeter, the results (both profits and losses) were attributed in full to the ultimate parent company while for non-resident companies only losses were attributed and in proportion to the size of the holding. Additionally the depreciation of goodwill was also dependent on the two categories (resident or non-resident) of companies.
[1761] CJ 6 October 2015, C-66/14, *Finanzamt Linz v Bundesfinanzgericht, Außenstelle Linz* para. 42.

irrespectively of profits or losses of the subsidiaries[1762]. Furthermore the possible taxation of capital gains upon a future sale did not amount to a direct link between the granted advantage and the disadvantage deriving from the taxation[1763]. The lack of such direct link was explained by the fact that the goodwill depreciation was immediate for the parent company head of the tax group while the disadvantage was uncertain and remote in particular considering that the participations in group members were typically not acquired for immediate subsequent sale. Finally it was also relevant to stress that the group taxation regime at stake provided the option for foreign participations to be subject to tax (instead of benefiting from the participation exemption regime). Even in that case, the depreciation of goodwill would be denied for foreign participations[1764].

Therefore, the difference as regards the treatment between domestic and cross-border group taxation regimes concerning goodwill depreciation may constitute, at least in some circumstances, an example of an unjustified breach to the freedom of establishment.

20.4 Interim Conclusions

This chapter analysed some other possible situations dealing with national legislations involving tax groups that may be challenged based on the discriminatory treatment given between domestic and cross-border scenarios.

A very limited number of Member States provide for both domestic and cross-border tax group regimes. Typically, both domestic and cross-border regimes exist in parallel. The underlying concept is that those Member States while providing for some degree of tax group integration on a cross-border basis still do not provide identical benefits as granted to purely domestic situations.

Such existing differences also require an assessment as to their compatibility with the fundamental freedoms. Considering the CJ approach, those differences most likely constitute a *prima facie* restriction to the freedom of establishment. While arguably some of them may be justified by the most common justifications accepted by the CJ within the context of a cross-border group taxation scenario (prevent the balanced allocation of the powers to tax or risk of tax abuse), others might, in fact, give rise to breach of the freedom of establishment.

[1762] CJ 6 October 2015, C-66/14, *Finanzamt Linz v Bundesfinanzgericht, Außenstelle Linz* para. 45-47.
[1763] CJ 6 October 2015, C-66/14, *Finanzamt Linz v Bundesfinanzgericht, Außenstelle Linz*, para. 48.
[1764] CJ 6 October 2015, C-66/14, *Finanzamt Linz v Bundesfinanzgericht, Außenstelle Linz* para. 49.

Part V

Conclusions

Chapter 21

Conclusions

This thesis deals with the impact of tax treaties and EU law on group taxation regimes. Specifically, it analyses how existing bilateral tax treaties and EU law may influence group taxation regimes. The background of the research considered the fact that the formation of tax groups is motivated by concepts of efficiency and neutrality of treatment between different forms of expanding an activity. Many groups operate globally. Taxpayers operating their business activities domestically should not find themselves in different circumstances considering legal differences, particularly where they do not match economic reality. This unequal treatment leads to the adoption of other forms of investment which, as a rule, are not the most efficient from an economic perspective.

Part II addresses the question of the relevance and characterization of tax groups.
The setting up of a group is related to the development of a company's business, either because it wants to diversify or expand its activity or because it aims at establishing itself in another market. Groups of companies have particular features and dynamics as they comprise a group of entities which, although they maintain their legal independence and individualization, are subject to a common business strategy. This strategy is guided by all group members making their contribution to achieve profit maximization. And that requires all resources to be allocated such to achieve the highest degree of efficiency.

Corporate groups give rise to a new model that considers the whole business instead of looking at each company separately. This model follows a functional rather than formal approach. If the legal entities are under common control and economically integrated, then all those entities that belong to the group should be considered together as one enterprise, regardless of the formal legal structures.

The way to arrange a business is motivated by maximizing economic performance. A taxpayer establishing or expanding its economic activity has to make choices. One of the most relevant decisions when deciding to expand or diversify a business is whether to do so by creating a separate legal entity or otherwise, expanding the existing company. That choice may be motivated by a myriad of business considerations, but also by tax considerations, considering the fundamental difference between a company which is treated as a separate taxpayer whereas an unincorporated entity is not. There are associated tax advantages and disadvantages by the fact that as a general rule, the tax system follows the separate entity approach, recognizing each company as a separate taxpayer.

Conceptually, a tax system should be guided by three fundamental principles: equity (fairness), efficiency and simplicity. This means that in an optimal scenario, a tax system should be neutral as regards influencing how a taxpayer should structure its business. The

taxpayers' choices - among which opting for an incorporated or unincorporated form for their activities - should be motivated by pure business considerations.

However, the separate entity approach leads to differences in the tax treatment between companies and unincorporated forms. Therefore, taxes will influence the taxpayers' behaviour. The tax-induced change in behaviour means that a taxpayer will try to arrange its transactions such to reduce its tax bill. It will search for alternative – substitute – transactions or structures which, although leading to (the closest) similar economic result, provide for a more advantageous tax treatment. However, every time that an alternative transaction or structure is implemented, that is, one that replaces the transaction that would be implemented based on regular business considerations, the principles of the tax system are jeopardized: it leads to an inefficient allocation of resources, promotes inequity among taxpayers and promotes complexity and increased compliance with the tax system.

A group taxation regime allows that the business reality of a group is acknowledged by the tax system. By avoiding (at least to some extent) taxing similar structures differently, it addresses the behavioural effects that such differences has on taxpayers, contributing to achieving the goals of a tax system.

The tax policy reasons underlying the adoption of group taxation regimes are guided by same principles of a tax system: efficiency, equity and simplicity.

First of all, group taxation regimes promote neutrality because taxation conforms to economic reality rather than to the legal form. It provides competitiveness to group structures and avoids excessive or inappropriate taxation because it taxes the overall income of the group as a single company Therefore, economic choices are not distorted based on the organic structure chosen to carry on a certain activity.

Group taxation regimes are also driven by equity considerations. By looking at a group as a tax unit, it identifies the effective income received by the whole group, effectively taking into account the underlying economic reality. In addition, it may prevent tax avoidance by disregarding transactions among group members and prevents discriminatory treatment as regards companies that opted to structuring as a group.

Finally the adoption of group taxation regimes may contribute to simplifying the administrative burden and reducing compliance costs.

In the current globalized world, it is particularly relevant to address group taxation regimes from an international perspective. The arguments that justify the adoption of group taxation regimes from a domestic perspective are also applicable at an international and an EU level.

The cross-border element poses additional challenges when treating the different group members as a single unit. This is due to the limitations as regards tax jurisdiction and the

possibility to tax foreign taxpayers, the potential overlap of jurisdictions claiming taxing rights over each of the companies belonging to the group and the income allocation deriving from the arm's length principle.

Nevertheless, equity and efficiency in particular are essential attributes of the international tax system. The current rules for the international allocation of income among States are essentially governed by existing bilateral tax treaties. Tax treaties constitute the fundamental instrument to regulate international fiscal relations between States and aim at eliminating tax obstacles. In that regard, they contribute to an efficient allocation of resources. In addition, the elimination of double taxation or prevention of non-discrimination addresses equity concerns common to groups of companies.

The fundamental goal of EU law – the internal market without barriers – is characterised by the abolition, as between Member States, of obstacles to the free movement. The underlying economic policy is to achieve a free and efficient allocation of resources and identical treatment between domestic and cross-border situations. EU law, in fact, bears some relation to the purpose of tax groups: neutrality and treating all of the EU area as a single country, just as tax groups aim at treating a group of companies as a single unity.

Tax group regimes exist in many Member States. The analyses performed evidences that many differences exist in the several existing group taxation regimes, starting with the fundamental choice of the degree of economic integration. Most of them apply only to domestic companies of those Member States. Therefore, the companies that are resident in a different State typically cannot benefit from the tax groups regime of the State of such parent company.

Even the very few Member States which provide for such regimes on a cross-border basis, set forth different requirements for tax groups composed exclusively of domestic companies as compared with ones which also integrate foreign companies. Even in those systems that contain such cross-border elements, the degree of integration is usually achieved to a lower degree than the domestic regimes.

Overall, the possibilities of cross-border group taxation are still very limited at the EU Level. This issue is just as relevant considering the fact that international trade and MNCs play a fundamental role in today's economy. The existence of tax groups is motivated by the principle of neutrality in the taxation of corporate activities: tax systems should tax the income in the same way irrespective of the organic structure adopted for that purpose. This means that a tax system should not lead to distortions only because such activity was not performed by a single company but rather through a group of companies.

The limitation of tax group benefits to domestic situations, the difference in treatment between domestic and cross-border situations, are all examples of situations which may affect neutrality and therefore, create obstacles as to an efficient allocation of resources.

In this regard, it is relevant to analyse how tax treaties and EU law may affect group taxation and contribute to eliminate tax obstacles deriving from the limitations of the existing group taxation regimes.

Part III of this thesis analyzed the influence of tax treaties on tax groups. Typically, tax treaties do not contain specific provisions dealing with group taxation. This is not surprising since the underlying premise of treaties is the separate legal entity approach, that is, each separate legal entity is treated as a separate taxpayer. Nevertheless, tax treaties can impact on group taxation. In the absence of such provisions, the application of tax treaties to tax groups should follow the interpretation of the general rules provided in the OECD MTC.

Primarily, this requires determining the treaty entitlement of groups, notably if they constitute a person and if they can be considered as residents of a Contracting State. In this regard it was concluded that, from a tax perspective, groups do not give rise to separate legal entities nor do they constitute different taxable units treated as a body corporate according to the tax laws of the Contracting State in which they are organized. Therefore, the tax group should not constitute a person for treaty purposes but rather its group members.

The following issue is to determine tax residence and whether the inclusion in a tax group can affect the status as a resident for treaty purposes. In the past, it was disputable whether subsidiaries would maintain their status as liable to tax and therefore residents for treaty purposes as regards some group taxation regimes. Currently, the approach is to consider that group members of a tax group maintain their tax resident status and are considered residents for the purposes of claiming treaty entitlement.

The alignment between domestic and treaty residence may be challenged in the case of dual resident companies. In the case a company is resident in two States, tax treaty provisions allow determining the relevance residence for treaty purposes. This may impact both the allocation of taxing rights as regards the income taxation of the different group members, the application of the relevant distributive rules as well as the possible claims under the non-discrimination article in tax treaties.

Another aspect is to consider the relation between tax treaties and cross-border group taxation. There are some cross-border group taxation regimes in force and it is relevant to determine whether the limitation and allocation of taxing rights in tax treaties may affect cross-border income consolidation in situations where the application of those cross-border tax groups is not specifically provided for in the tax treaty itself (and its Protocol). It this context, it was argued that cross-border tax groups do contravene tax treaties and the respective distributive provisions. The purpose of tax groups is to treat a group of companies as a single entity. In this regard, it assumes, *inter alia*, the set off of profits and losses of different group members. Therefore, the income consolidated at the level of the

parent company includes income of other members of the group and their cross-border taxation may collide with the allocation of taxing rights provided in tax treaties. The best solution is then to include a specific provision in the treaties, such to safeguard the application of cross-border group taxation.

The effect of tax treaties as regards the cross-border dimension of groups is particularly influenced by the non-discrimination the non-discrimination provision of Article 24. Article 24 establishes the principle of non-discrimination in tax treaties. The various paragraphs of Article 24 list the circumstances which, for tax treaty purposes, should not be subject to discriminatory treatment. For the purpose of determining if a particular situation is protected under one of the clauses of Article 24, a test should be performed: to compare the taxpayer with a hypothetical situation in which he would be either a national or a resident of the other contracting State. If in that hypothetical situation the taxpayer would benefit from the application of the relevant legislation, then the non-discrimination provision is being breached. It is not required that all circumstances are entirely identical except with regard to the specific factor protected under one of the non-discrimination provisions. The requirement is that the relevant factor for the adverse treatment is within one of the paragraphs of Article 24 even if other conditions that are merely incidental are not exactly the same.

Paragraph 1 provides for the nationality clause and prohibits nationals of one contracting State to subject nationals of the other contracting State to other or more burdensome taxation than its own nationals that are in the same circumstances.

Paragraph 3 deals with unfavourable taxation with regards to the PE that an enterprise of one State has in the other Contracting State. This provision aims at guaranteeing that the PE taxation will not be levied less favourably. Apparently, the wording of paragraph 3 is narrower than the wording adopted in paragraph 1 (and 5) and consequently, it provides for a lower standard of protection. In that sense, discriminatory treatment arises only in situations that result in more burdensome taxation of PEs either as a consequence of a different tax base or tax rate. However, it is possible to consider an alternative interpretation whereas the term taxation in paragraph 3 should have an identical meaning as in paragraph 1 in order to include all the elements of a tax system. Therefore, PEs should benefit from all the rules as they apply to resident companies except those that, by nature, cannot be extended to PEs.

Paragraph 4 provides for a non-discrimination principle to be applicable to deductible payments made to residents of the other contracting State. This deductibility discrimination principle is subject to an exception allowing a State to deny a deduction based on the arm's length principle reflected in Articles 9(1), 11(5) and 12(4).

Finally, paragraph 5 includes a clause 5 prohibiting that a domestic enterprise whose capital is wholly or partially owned or controlled directly or indirectly by residents of the other

contracting State to be subject to other or more burdensome taxation or connected requirements that a similar enterprise whose capital is owned by residents of the taxing country. Although the provision is silent on the criteria to ascertain similarity, it is accepted today that a comparison should be made between foreign-owned local companies with similarly locally owned companies. Its scope is restricted to instances where the resident subsidiary is subject to less favourable treatment because of it being controlled by a non-resident rather than by a resident company.

There is no clear overview of the policy surrounding the non-discrimination article. This creates uncertainty when dealing with the interpretation and application of this provision and its exact scope. The main goal of tax treaties is to facilitate international trade by minimizing barriers in the exchange of goods and services across national boundaries. For that purpose, tax treaties fulfil different purposes, among which, preventing discriminatory treatment. Determining the treaty purposes is relevant for the interpretation process under Article 31 (1) VCLT. The non-discrimination provision determines a special purpose of tax treaties and therefore, should be subject to a functional and teleological interpretation.

As stated, tax treaties do not address tax groups' situations although there are some references in its Commentary, in particular as regards the application of the non-discrimination clauses of Article 24 in a group taxation context.

Paragraph 1 does not provide any reference although it does include one example that confirms its application to tax group situations. It has been demonstrated that this provision will apply in the case of companies that are resident in the same State but where a company is denied the possibility of being a group member because its nationality is from another State.

The OECD MTC Commentary to paragraph 3 of Article 24 appears to exclude the possibility of claiming tax treaty non-discrimination in the context of group taxation situations involving PEs. According to the OECD reasoning, this would be due to the fact that this paragraph relates only to the taxation of the profits of the PE itself. However, it has been demonstrated by several examples that paragraph 3 does indeed apply as to support the inclusion of PEs in tax groups. Essentially, the participation of a PE in a tax group relates to the profits (and losses) of the PE itself. Therefore, at least whenever the relationship of the PE with other group members affects the taxation of the PE itself, then such relation is relevant for the application of paragraph 3 to PEs in the context of group taxation regimes.

The application of the foreign ownership in paragraph 5 of Article 24 to tax groups requires once again determining whether this provisions is applicable at all in the context of group taxation and if so, to what extent, that is, effectively requiring extending groups to cross-border situations or differently, limited to the tax jurisdiction of each State involved.

It was submitted that the OECD MTC Commentary to Article 24 does not preclude its application to tax groups. In fact, its application to tax groups is quite relevant as demonstrated by several examples.

The Commentary does indeed exclude situations where the application of Article 24 would lead to combining the effect of the taxation of the parent and subsidiary resident in two different States. In other words, taxpayers may not rely on the non-discrimination provision to claim extending group taxation to cross-border situations. This conclusion is logical considering that a fundamental distinction in tax treaties is between residents and non-residents and subject and not-subject to tax. Tax treaties allocate taxing rights and the interpretation and application of tax treaty non-discrimination should not affect such allocation. Ultimately, the extension of groups to cross-border situations could lead to some situations of double non-taxation, which would be contrary to the object, and purpose of tax treaties. On the contrary, Article 24 is indeed applicable to extend the benefits of group taxation when the affiliated companies are resident in the same State. In that event, the State in which the companies are located is able to take into account both the losses and the profits, that State has jurisdiction to tax all its resident companies. This is particularly the case of grouping profits and losses between domestic subsidiaries held by a parent company resident in another State. Therefore, the foreign ownership provision should be applied to the extent that the distributive rules do not preclude the State that is applying the group taxation regime to take into account the results of the other member(s) of the group. This conclusion is applicable irrespective of the type of group taxation regime at stake.

The application of paragraph 4 of Article 24 may be applied to tax groups in the context of a per-element analysis.

Therefore, a question to be dealt with when analysing the application of tax treaty non-discrimination to group taxation regimes is whether the per-element approach is also possible in the context of tax treaties. It has been submitted that it is possible to adopt a more liberal approach to the interpretation of non-discrimination in tax treaties that does not require identification of all facts but only a similarity of the relevant facts regarding the specific instance at stake. Therefore, for the construction of the comparator, it is possible to take into account only the elements that are required for the application of the specific rule in question. As demonstrated with concrete examples, by making a separate analysis for each element and restricting it to domestic effects would allow achieving a result which complies both with the wording and the purpose of tax treaty non-discrimination. When the application of the non-discrimination clauses is limited to domestic effects (e.g. interest deduction limitations) there is no shifting of profits or losses that affects the allocation of taxing rights under tax treaties nor does it go against the wording of Article 24.

This thesis also explored the possible interaction of tax treaty non-discrimination provisions and its application in the specific context of group taxation situations.

The existing non-discrimination provisions of tax treaties do not adopt a wide neutrality approach, they only cover particular grounds of discriminatory tax treatment. Therefore, situations of complex discrimination where the difference in treatment arises due to more than one criterion are perfectly conceivable. As demonstrated by some examples in this thesis, there are several situations involving tax groups where complex discriminatory situations may arise. In that event, it has been submitted that multiple tax treaty non-discrimination provisions might apply cumulatively when the discriminatory treatment is due to a multiplicity of factors that require the combined application of the non-discrimination provisions in order to remedy the disadvantage.

The combined application of non-discrimination clauses may involve clauses of the same treaty. Considering that a State has made a commitment against two types of different discrimination clauses in the same tax treaty there seems to be nothing to prevent its combined application. If a State signs a tax treaty with a model of OECD Article 24, it is assuming that it will not provide discriminatory treatment to its treaty partner on the specific grounds covered by the various clauses of the non-discrimination article irrespective of their being applied separately or cumulatively. This combined application, however, may be limited by the fact that not all the clauses of Article 24 appear to provide for the same standards of protection. For instance, paragraph 3 addresses *less favourable taxation* while paragraph 5 covers *other or more burdensome taxation and connected requirements*. The combined application of these provisions may only occur in the case a taxpayer falls within the scope of both non-discrimination clauses being invoked. This may imply that combining both paragraphs 3 and 5 would lead to the lowest degree of protection.

Similarly, the combined application of non-discrimination clauses may involve combining different non-discrimination clauses of different tax treaties. In this case it has been argued that whenever two (or more) different tax treaties have an identical non-discrimination article, it seems possible to claim the combined application of non-discrimination clauses of each of those treaties. Arguably this has a particular impact on group taxation as it allows invoking the foreign ownership provision of different treaties such to allow extending the benefits of a tax group to resident companies held directly and indirectly by different companies resident in different States all of which having an identical foreign ownership provision.

Finally, it was also argued that it is possible to invoke the protection of discriminatory treatment provided in multiple agreements other than tax treaties. For its relevance to this study, the analysis focused on the application of tax treaties and EU Law. The approach to non-discrimination in general and to group taxation regimes in particular can be analysed separately from an EU Law or tax treaty perspective. However, a closer analysis shows that a causal link exists between these two realities: the interpretation of the non-discrimination requirement under the fundamental freedoms seems to be influencing the interpretation of the non-discriminatory obligations in tax treaties.

There are similarities as well as relevant differences between tax treaties and EU law. Nevertheless, there is case law evidencing that national courts within the EU approach the concept of non-discrimination in tax treaties influenced by EU law.

Tax treaties and EU law fulfil different purposes and there is no conflict of application between the two sets of provisions. They create two layers of obligations for the respective States and therefore, they can be applied in a parallel manner. Therefore, it is possible that both TFEU provisions and the non-discrimination clauses in tax treaties apply to the same situation. In that event, an alternative application of tax treaty and EU law provisions is possible, and the taxpayer is free to choose either one of them or both.

Similarly, it is also possible to combine both the application of Article 24 and the TFEU freedoms. In that case, the use of non-discrimination provisions in tax treaties may constitute a valuable alternative to overcome the limitations in the (territorial) scope of the fundamental freedoms. This is applicable in the context of group taxation regimes considering that the application of the TFEU freedoms is restricted to the freedom of establishment. The combined application of tax treaty non-discrimination provision with EU law allows to explore and, in certain cases, to expand the boundaries of the TFEU protection beyond mere intra-Community situations.

Part IV assessed the influence of EU on cross border group taxation. The current status of EU corporate income tax law harmonization is still relatively scarce. Despite the importance of the current existing Directives with impact on groups of companies, they have not been able to eliminate the underlying existing problems. In addition, the most ambitious proposals of the Commission, first in the field of cross-border loss relief and more recently on a CCCTB, have not been approved and it is unlikely that such approval will be extended in the short-term.

Therefore, and in the meantime, Courts have been forced to deal with a large number of challenges by groups to national regimes that they consider to be discriminatory. In particular, the CJ has been called upon for rulings on several cases which impact on groups of companies in order to try to remedy some of the situations which the EU legislature, so far, has been unable to materialize in legislation. The absence of such legislative framework has obviously jeopardized harmonization and the possibility to have a cross-border group consolidation at the EU level. In the meantime, the CJ has pursued its role of negative harmonization, relying on the interpretation of the fundamental freedoms to scrutinize the extent to which the existing national group taxation regimes comply with the TFEU.

As the CJ consistently repeats, direct taxation is still within the competence of the Member States. Since harmonization measures in the direct tax area remain scarce, Member States must ensure that their national legislation complies with the fundamental freedoms that govern the Internal Market. The assessment of whether a particular measure is compatible

with EU Law is a competence of the CJ. Nevertheless, the delimitation of the tax jurisdiction exercised by the Member States remains outside the scope of EU Law. Member States are free to define and allocate their taxing rights. Therefore, the Treaty freedoms are only engaged once a Member State has decided to assert tax jurisdiction over a certain person or item of income, ensuring that such jurisdiction is applied in accordance with the Treaty.

This requires determining what constitutes a *prima facie* infringement of the Treaty freedoms. A correct delimitation of the first step in finding an EU law breach – the existence of discriminatory or restrictive measure – means outright stopping of the analysis and finding a domestic tax measure as compliant with that Member State's obligations under the Treaty. However, when the discrimination and restriction concepts are muddled, their standards of application relaxed or misapplied, then a Member State might, at first glance, be in the process of infringing its Treaty obligations. The consequence is that a burden is placed on that particular Member State, which must then pass the rule of reason analysis under which it may deviate from its treaty obligations as regards the fundamental freedoms if there is an overriding reason in the public interest that supports that measure which must be concomitantly applied in a proportionate measure.

The TFEU freedoms provide for two degrees of protection: the prohibition of restrictions and the prohibition of discriminations. Particularly in the case of direct taxation, this distinction has often been blurred by the CJ's language. However, both the Advocate Generals and the Court itself do not appear to favour finding non-discriminatory restrictions in direct taxation.

One of the fundamental issues when analyzing if a situation falls within the scope of the Treaty protection involves determining which fundamental freedom applies. This is relevant in third country situations considering that only the free movement of capital is applicable in such scenarios. By their nature, group taxation regimes require high thresholds of participation which, pursuant to the CJ case law determines that only the freedom of establishment applies. As a consequence, group situations involving companies resident in third States cannot benefit from the protection of the TFEU freedoms.

The assessment as to the compatibility of existing group taxation regimes with EU Law is then based on the fundamental freedoms. The CJ case law on the application of the EU fundamental freedoms to group taxation regimes has already dealt with a range of different situations: from addressing a broader question of whether a domestic group taxation regime should be extended to cross-border situations, to different other situations involving the definition of the group perimeter, and also the possibility of extending specific benefits in an intra-Community context. The decisions of the CJ involving tax groups – and in particular, as regards the transfer of losses within international groups of companies – has given rise to some of the most important judgments concerning national direct taxes. In fact, the issue of transfer of losses within a cross-border context is probably the most

significant one. Clearly, because the judgment in *Marks & Spencer* undoubtedly constitutes one of the most important rulings of the Court concerning direct tax matters and has set the precedent for subsequent case law. And, fundamentally, because the CJ reasoning in that case gave rise to all kinds of different questions.

In order to assess whether a specific tax measure is discriminatory, the CJ engages in a comparability test. When it comes to the comparability standard, it is apparent in examining the case law that there is no homogeneous approach which leads to uncertainty of what constitutes a breach of EU Law. In the first stages of direct tax cases, the Court stated that residents and non-residents were not generally comparable but became comparable by virtue of exercising their taxing rights over them – comparability through taxation.

The development of the case law throughout the years has led to establishing comparability predominantly as regards the aim of the measure tested against the fundamental freedoms. In this approach, the Court looks at the objective pursued by the national legislation and ascertains whether, in light of this objective, it is sensible to make a distinction between domestic and cross-border situations. This is also the most common approach when the Court engages in comparability when assessing domestic group taxation regimes. However, even here there is some uncertainty surrounding the Court's approach. In some cases, the Court did not engage in comparability at all whereas in others, it established comparability based on the intention of the taxpayer to benefit from a particular tax provision.

The different approaches followed by the Court are undesirable because they reveal inconsistency and lead to uncertainty as to the choice of the appropriate comparator. In addition, the fact that the Court follows a broad approach for determining the existence of discriminatory treatment – often performing the comparison at the level of justifications – implies that there is a shifting of the burden to the Member States, which have to demonstrate the existence of reasons that justify an otherwise discriminatory tax measure.

From the perspective of group taxation regimes, the Court's analysis is no different. Predominantly (although not exclusively) the CJ looks at the aim of the legislation at stake so as to determine the existence of discriminatory treatment.

For the purposes of determining the relevant comparator, the Court engages in a vertical comparison: the treatment of purely domestic groups as compared with cross-border groups. The existence of a discriminatory treatment arises as from the moment that the benefits of a tax group are available domestically but not cross-border. Conceptually, the CJ approach is understandable from an Internal Market perspective but is open to criticism when considering the interaction between the respect of the Member States' tax sovereignty and the scope of application of the fundamental freedoms. As from the moment that the Court considers that a Member State must take into account the results (for example, losses) of a separate taxpayer resident in another Member State, it is in fact asserting its jurisdiction over that taxpayer.

Another relevant aspect as regards comparability within the context of tax groups is whether the CJ should accept – in certain cases – a horizontal comparison, meaning in this case to compare subsidiaries with PEs. The CJ accepts this standard of comparison from a Host State perspective (which can in fact be traced back to the earlier ages of the CJ case law on direct taxation) while rejecting such comparison from the perspective of the Home State. The Court's argument is that foreign PEs and foreign subsidiaries are different as regards the powers to tax of the Home Member State. In abstract, this argument is entirely correct but the CJ in this case appears to ignore the aim and effects of the some group taxation regimes that assimilate subsidiaries to PEs, which would precisely render such comparison possible.

Direct tax measures that restrict the exercise of the fundamental freedoms are capable of being justified by overriding reasons in the public interest. In direct tax cases, the commonly accepted justifications are the effectiveness of fiscal supervision, the need to safeguard fiscal cohesion, the principle of territoriality, the prevention of abuse, the balanced allocation of the powers to tax and the need to prevent that losses may be taken into account twice.

Throughout the almost 30 years of direct taxation case law, the use of these justifications has led to numerous questions as to their exact meaning, scope and possible overlaps between them. This is particularly apparent as regards group taxation. It was in the group taxation case law that the Court applied, for the first time, the justification based on the need to preserve the balanced allocation of the powers to tax. Also an innovative approach in this cluster of cases was the fact that the Court started pairing justifications together with little explanation, raising the question as to autonomous value of each justification and its precise scope of application.

The principle of territoriality is a commonly invoked justification for a breach of the fundamental freedoms by Member States. This justification is applied by the Court based in its international law meaning and not based on its tax law meaning in the sense of delimitation of tax jurisdiction.

The justification based on the need to preserve the coherence of the tax system has been accepted when there is a direct link between a particular tax advantage and an offsetting tax levy. The existence of such direct link may arise if the tax advantage and levy are imposed on the same taxpayer in relation to the same tax. It represents the acknowledgment by the Court that a Member State may apply a restrictive measure if it is systematically linked to a subsequent measure that neutralizes its restrictive effect. In that sense, it applies within the framework of a national tax system. The relevance of coherence as a rule that aims at safeguarding the internal coherence of the tax system is apparent in group taxation cases that deal with a domestic perimeter of group companies which have a foreign link (e.g. grouping domestic companies held by a foreign parent/intermediary holding). In these cases

it is apparent that only one jurisdiction is involved, by contrast to other case law where the Court invoked the balanced allocation of the powers to tax involving cross-border loss relief, that is, shift of income between different Member States.

The Court has on several occasions recognised that, in principle, Member States may be justified in taking otherwise discriminatory tax measures in order to prevent abuse of law. The Court has held, in principle, that this justification is permissible only when the rule was targeted sufficiently to affect only wholly artificial arrangements. The fundamental issue as regards the interpretation of this justification in the field of group taxation derives from the fact that the Court appears to have given a broader meaning to this justification. A first explanation may derive from the inherent artificiality involving group taxation regimes. The transfers of income between companies of the group rely essentially on accountancy adjustments without underlying transactions.
A second explanation relies on the fact that the prevention of tax avoidance in this context has been tied with the balanced allocation of the powers to tax. In other words, the broader meaning given by the Court to the prevention of tax avoidance is explained by the fact that this meaning was accepted when its application was combined with the need to prevent jeopardizing the balanced allocation of the powers to tax.

Another of the accepted justifications is the prevention of double use of losses. By accepting this justification the CJ wants to prevent the concurrent use of benefits in two different tax jurisdictions.

The preservation of the balanced allocation of the taxing rights between Member States is one of the most recent justifications recognized by the CJ which still has not impeded it from turning into one of the most frequently argued. Initially, the CJ accepted this justification in combination with other justifications. The Court referred to the relevance of this justification to ensure the power of Member States to tax the activities carried out in their territory. This justification has been successfully invoked within the context of group taxation when possible cross-border flows of income (positive or negative) are involved. In this regard, the CJ uses this justification to uphold applying to the economic activities of a company only the tax rules of the respective Member State of residence in respect of both profits and losses.

The issues subject to more controversy as from the moment that the Court accepted this (new) overriding reason in the public interest, concerns the combined effect of the justifications used together raising the doubt of whether and which justifications could serve as an autonomous justification for a restrictive measure and, if so, what was its precise scope of application. Again the case law on group taxation is crucial considering that the triptych use of justifications was applied for the first time when assessing the compatibility of a tax group regime with the fundamental freedoms. In addition, doubts arose as to the exact scope of and differences between the above justifications.

Although there is a relation between the justifications based on the principle of territoriality, coherence of the tax system and balanced allocation of the powers to tax, they do not have the exact same meaning. The justification based on the balanced allocation of the powers to tax complements the other justifications as it addresses specifically the situations arising from the possible interaction of two tax systems of two different Member States.

As regards the mere prevention of abuse with the broad criterion followed by the Court, it appears to serve the purpose of preserving the balanced allocation of the powers to tax. Therefore, the prevention of tax avoidance constitutes a manifestation or a sub-category of the justification of the balanced allocation of the powers to tax between Member States in the sense that represents a risk that jeopardizes the balanced allocation of taxing rights.

The double use of losses is also a sub-category or a manifestation of the balanced allocation of the powers to tax and an autonomous justification. The CJ case law demonstrates that the double use of losses is only accepted as a justification when there is a transfer of one loss from one jurisdiction to the other jurisdiction, thus affecting the balanced allocation of the powers to tax between Member States. Again this was apparent from the CJ case law dealing with the definition of a domestic perimeter of group companies with a foreign link where the CJ affirmed the secondary role of the double use of losses.

The last stage of the rule of reason lies in the analysis of proportionality, which entails pondering the limitations on free movement against the accepted overriding reasons in the public interest such that the application of the latter does not harm the former more than is necessary.

In the context of group taxation regimes, the proportionality test is inherently related to cross-border loss relief and the no-possibilities test. In *Marks & Spencer*, the CJ ruled that a State is obliged to import foreign losses when those losses can no longer be used locally. This judgement in the context of a group relief system, posed a significant challenge for domestic courts and governments that was to determine the exact meaning of final losses, how to calculate them and the circumstances that determine finality. Moreover, it also led to a significant number of questions as to what was the CJ's rationale to follow this reasoning, if its reasoning applied to other group taxation regimes, and whether it limited the entities that could claim cross-border loss relief.

But a first striking aspect in the CJ case law was the fact that it disregarded the relevance of cash-flow disadvantages. One of the primary reasons to elect to form a tax group is the possibility to immediately offset losses with profits. In that regard, the cash-flow advantage deriving from this advantage is fundamental to the choice to form a group. Therefore, the fact that the CJ did not acknowledge the relevance of cash-flow advantages – specifically considering that the related disadvantages had already been scrutinized several times as infringements to the freedoms – and only accepted that final losses can be used cross-border can be criticised.

The adoption of a deduction recapture mechanism would clearly be more compliant with the goal of a tax group, would take into account the justifications accepted by the CJ and would be more in line with the proportionality test. As from the moment that the Court found a restriction to the freedom of establishment taking into account the aim of group taxation regimes, it should have favoured the adoption of a deduction recapture mechanism rather than a solution based on the finality of losses.

This solution would not only be more in line with the fundamental freedoms, as it would avoid all kinds of interpretative issues as regards determining the meaning of final losses. The underlying rationale for the adoption of this solution may be traced back to the case law in the field of individual income tax and the *Schumacker* doctrine: the possibility to take into account the losses once. This commonly called always somewhere approach, however, is not absolute: it is limited to an *ab initio* possibility to use the losses where they arose. Only if that possibility no longer exists – but had existed at some moment – is the other Member State forced to take the foreign losses into account.

From the perspective of the Member State that imports the foreign losses, the Court's approach is based on the existence of a discriminatory treatment. Therefore, a Member State is only obliged to take into account foreign losses if identical losses would be considered in a purely domestic situation.

As regards the circumstances that give rise to final losses, it is submitted that both legal and factual exhaustion meet the requirements of finality. This is the solution that better fits in with the wording of the CJ after the *Marks & Spencer* judgment and also avoids tax planning strategies as to allow the recognition of foreign losses in the case the finality would be limited to factual exhaustion.

The CJ appears to adopt an all or nothing approach as regards final losses. Even if it is apparent that not only foreign generated losses can be used in the respective State where they were incurred, Member States are not obliged to import the unused foreign losses based on a pro-rata approach, as long as even only a very small part of those losses will be used in the respective State where incurred. It is submitted that this is an incorrect approach followed by the CJ, which is not in line with the principle of proportionality.

Another relevant issue is the case of concurrence between domestic and foreign (final) losses. In this event it has been submitted that, in principle, there is no priority as to the use of either of the losses.

As regards the calculation of the foreign generated losses, in principle, they should be subject to re-calculation under the rules of the Member State that imports those losses. However, this rule is subject to the lower of the two amounts: (i) the amount determined by the State where they were originally incurred if lower that the re-calculation by the State

where the cross-border loss relief occurs; or (ii) the amount recalculated under the rules of the Member State that imports the losses if lower than the amount under the rules of the State where originally incurred.

In addition, it has also been submitted that the proportionality test and specifically, the finality of the losses as determined by the CJ in the context of a group relief system, is equally applicable in the context of other group taxation systems within the various EU Member States.

Finally, the CJ case law also does not allow setting any limitation on which entity is entitled to claim cross-border group relief. Therefore, it is proposed that not only vertical upstream loss relief but also horizontal and downstream loss relief is possible when the conditions of the no possibilities test are met.

The CJ case law supports the view that a taxpayer may rely on the EU Treaty freedoms to invoke certain advantages in cross-border situations that are otherwise available domestically only within a tax group. Therefore, it is possible in principle for a taxpayer to claim certain elements – per-element approach - of group taxation regimes without the need to enter into a cross-border tax group. The reasoning developed in *X Holding* appears to reject extending group taxation to cross-border situations as such. For the Court, while the domestic limitation constitutes *prima facie* a restriction to the freedom of establishment, such restriction is justified as otherwise the parent company could decide on a yearly basis to a form a tax group or to terminate it.

Therefore, the conclusion stated in *X Holding* replied to the question whether the legislation of a Member State that denies that foreign subsidiaries may be part of a tax group was compliant with the freedom of establishment. The CJ considered that the interpretation of the freedoms does not preclude such legislation, which offers the possibility of forming a tax group with domestic subsidiaries while not allowing an identical possibility with foreign subsidiaries, ultimately because these are not subject to tax in the same Member State. However, it cannot be inferred from this judgment that any differences in treatment between companies belonging to a tax group and companies not belonging to such group are compatible with the freedom of establishment nor that the Court precludes an individual assessment of each individual benefits of a group taxation regime.

In the interpretation of this judgment as well as subsequent case law, most notably in *Groupe Steria*, the Court in fact affirmed that each element of a tax group must be assessed individually against the fundamental freedoms and therefore, it may be possible for a taxpayer to request in a cross-border context, certain benefits allowed domestically within a tax group.

This conclusion is not challenged either by nature and features of the particular group taxation regime at stake or by the prospect of cherry-picking related to the possibility of taxpayers choosing specific benefits of a tax group.

Therefore, it may be possible for each taxpayer to invoke separate elements of a group taxation regime in a cross-border situation. This requires testing each individual element against the TFEU freedoms.

Absent any previous decision in the specific context of group taxation this assessment relies on the application of the previous case law by analogy. This was precisely the approach followed by the Court in *Groupe Steria* (for example, by relying on the reasoning developed in the *Haribo* case) and should be transposed identically when dealing with other individual benefits of a tax group.

Finally, there are other possible situations dealing with national legislation involving tax groups that may be challenged but those are based on the discriminatory treatment given between domestic and cross-border scenarios.

A very limited number of Member States provide for both domestic and cross-border tax group regimes. Typically, both domestic and cross-border regimes exist in parallel. The underlying concept is that those Member States, while providing for some degree of tax group integration on a cross-border basis, still do not provide identical benefits as granted to purely domestic situations.

Such existing differences also require an assessment as to their compatibility with the fundamental freedoms. Considering the CJ approach, those differences most likely constitute a *prima facie* restriction to the freedom of establishment. While arguably some of them may be justified by the most common justifications accepted by the CJ within the context of a cross-border group taxation scenario (prevent the balanced allocation of the powers to tax or risk of tax abuse), others might in fact give rise to breaches of the freedom of establishment.

APPENDIX

Chart I

Summary Chart[1765] of Domestic Group Taxation Regimes[1766]

Country	Type of group taxation regime	Technique	Optional	Ownership	Local PE of non-resident as head entity	Minimum duration	All-in[3]	Degree of consolidation	Tax free Intra-group transfer of assets	Entity owning the losses	Use of losses upon joining[4]
Austria	Consolidation Regime	Pooling	Yes	>50%	No[5]	3 years	No	Total	No	Head entity	Ring-fenced
Denmark	Consolidation Regime	Pooling	No	Control	Yes	N/A	Yes	Total	No	Loss-making company	Ring-fenced
France	Consolidation Regime[2]	Pooling	Yes	95%	Yes	5 years	No	Total	Yes	Head entity	Ring-fenced
Germany	Consolidation Regime[1]	*Organschaft*	Yes	>50%	Yes	5 years	No	Total	No	Head entity	Ring-fenced
Italy	Consolidation Regime[2]	Pooling	Yes	>50%	Yes[6]	3 years	No	Total	No	Head entity	Ring-fenced
Netherlands	Consolidation Regime[2]	Attribution	Yes	95%	Yes[7]	None	No	Total	Yes	Head entity	Ring-fenced
Portugal	Consolidation Regime[1]	Pooling	Yes	>50%	No	None	Yes	Total	No	Group	Ring-fenced
Spain	Consolidation Regime[2]	Pooling	Yes	75%[8]	Yes	None	Yes	Total	Yes	Group[9]	Ring-fenced
Sweden	Group contribution system	N/A	Yes	90%	Yes	Entire fiscal year	N/A	N/A	Yes[10]	Receiving company	Included
UK	Group relief	N/A	Yes	75%	N/A	N/A	N/A	N/A	Yes[10]	Receiving company	Ring-fenced

[1765] The background information for these charts is based on the tax group regimes of the following countries: Austria, Denmark, France, Germany, Italy, Netherlands Portugal, Spain, Sweden and the United Kingdom. The choice of the tax groups' regimes of these countries is due to the fact that they represent the different models of the existing tax groups' regimes and they refer to legislation which has introduced tax group regimes for some years and therefore, where there has already been some experience in their application. In addition, the analysis is confined to EU group taxation regimes given that this dissertation is focused on an analysis both of tax treaties and EU law.

[1766] Based on information contained on the OECD Report on *Corporate Loss Utilisation Through Aggressive Tax Planning* (2011), p.32.

1. Refers to partial consolidation systems
2. Refers to full consolidation systems
3. Column refers to whether all qualifying entities in a group must be included in the group taxation regime
4. Column deals with whether losses incurred by one entity before (i) the group taxation regime was in place, (ii) the conditions for intra-group transfers of income were met, or (iii) the conditions for group taxation were met, can be offset against the results of other group entities
5. If the company is resident in the EEA
6. If the company is resident in a country with a DTC
7. If the company's legal form is comparable with a Netherlands NV or BV and it is incorporated under the law of the Netherlands Antilles, Aruba, an EU Member State or a State with which the Netherlands has concluded a DTC with a non-discrimination provision.
8. For taxable periods starting on or after 1 January 2010, the 75% threshold is reduced to 70% in cases where the subsidiary is a listed company. This reduced threshold also applies in the case the subsidiary is indirectly owned through listed companies
9. With respect to entities leaving the group, unused carry-forward losses are reallocated to these entities according to their portion of losses
10. These Member States have two separate regimes for loss offsets and asset transfers

Chart II

Summary Chart of Cross-Border Group Taxation Regimes[1767]

Country	Head Entity	Technique	Ownership	All-in	Term	Ruling	Determination of taxable income	Tax free Intra-group transfer of assets	Degree	(Early) termination of the regime
Austria	Resident or PE of EEA company	Pooling	>50%	No	3 years	No	Austrian	No	Proportional	Recapture of losses
Denmark	Resident or PE of non-resident company	Pooling	Control	Yes	10 years	No	Danish	No	Full	Exit
Italy	Resident	Pooling	>50%	Yes	5 years (3 years subsequent renewals)	Yes	Italian	No	Proportional	Recapture of losses

[1767] Based on information contained on the OECD Report on *Corporate Loss Utilisation Through Aggressive Tax Planning* (2011), p. 33.

Summary

This thesis deals with the impact of tax treaties and EU law on group taxation regimes. Specifically, it analyses how existing bilateral tax treaties and EU law may influence group taxation regimes. The background of the research considered the fact that the formation of tax groups is motivated by concepts of efficiency and neutrality of treatment between different forms of expanding an activity. Many groups operate globally. Taxpayers operating their business activities domestically should not find themselves in different circumstances considering legal differences, particularly where they do not match economic reality. This unequal treatment leads to the adoption of other forms of investment which, as a rule, are not the most efficient from an economic perspective.

Part II addresses the question of the relevance and characterization of tax groups. The setting up of a group is related to the development of a company's business, either because it wants to diversify or expand its activity or because it aims at establishing itself in another market. Groups of companies have particular features and dynamics as they comprise a group of entities which, although they maintain their legal independence and individualization, are subject to a common business strategy. This strategy is guided by all group members making their contribution to achieve profit maximization. And that requires all resources to be allocated such to achieve the highest degree of efficiency.

Corporate groups give rise to a new model that considers the whole business instead of looking at each company separately. This model follows a functional rather than formal approach. If the legal entities are under common control and economically integrated, then all those entities that belong to the group should be considered together as one enterprise, regardless of the formal legal structures.

The way to arrange a business is motivated by maximizing economic performance. A taxpayer establishing or expanding its economic activity has to make choices. One of the most relevant decisions when deciding to expand or diversify a business is whether to do so by creating a separate legal entity or otherwise, expanding the existing company. That choice may be motivated by a myriad of business considerations, but also by tax considerations, considering the fundamental difference between a company which is treated as a separate taxpayer whereas an unincorporated entity is not. There are associated tax advantages and disadvantages by the fact that as a general rule, the tax system follows the separate entity approach, recognizing each company as a separate taxpayer.

Conceptually, a tax system should be guided by three fundamental principles: equity (fairness), efficiency and simplicity. This means that in an optimal scenario, a tax system should be neutral as regards influencing how a taxpayer should structure its business. The taxpayers' choices - among which opting for an incorporated or unincorporated form for their activities - should be motivated by pure business considerations.

However, the separate entity approach leads to differences in the tax treatment between companies and unincorporated forms. A group taxation regime allows that the business reality of a group is acknowledged by the tax system. By avoiding (at least to some extent) taxing similar structures differently, it addresses the behavioural effects that such differences has on taxpayers, contributing to achieving the goals of a tax system.

The tax policy reasons underlying the adoption of group taxation regimes are guided by same principles of a tax system: efficiency, equity and simplicity.

In the current globalized world, it is particularly relevant to address group taxation regimes from an international perspective. The arguments that justify the adoption of group taxation regimes from a domestic perspective are also applicable at an international and an EU level. The cross-border element poses additional challenges when treating the different group members as a single unit. This is due to the limitations as regards tax jurisdiction and the possibility to tax foreign taxpayers, the potential overlap of jurisdictions claiming taxing rights over each of the companies belonging to the group and the income allocation deriving from the arm's length principle. Equity and efficiency in particular are essential attributes of the international tax system. The current rules for the international allocation of income among States are essentially governed by existing bilateral tax treaties.

Tax treaties constitute the fundamental instrument to regulate international fiscal relations between States and aim at eliminating tax obstacles. In that regard, they contribute to an efficient allocation of resources. In addition, the elimination of double taxation or prevention of non-discrimination addresses equity concerns common to groups of companies.

The fundamental goal of EU law – the internal market without barriers – is characterised by the abolition, as between Member States, of obstacles to the free movement. The underlying economic policy is to achieve a free and efficient allocation of resources and identical treatment between domestic and cross-border situations. EU law, in fact, bears some relation to the purpose of tax

groups: neutrality and treating all of the EU area as a single country, just as tax groups aim at treating a group of companies as a single unity.

Tax group regimes exist in many Member States. The analyses performed evidences that many differences exist in the several existing group taxation regimes, starting with the fundamental choice of the degree of economic integration. Most of them apply only to domestic companies of those Member States. Therefore, the companies that are resident in a different State typically cannot benefit from the tax groups regime of the State of such parent company.

Even the very few Member States which provide for such regimes on a cross-border basis, set forth different requirements for tax groups composed exclusively of domestic companies as compared with ones which also integrate foreign companies. Even in those systems that contain such cross-border elements, the degree of integration is usually achieved to a lower degree than the domestic regimes.

The limitation of tax group benefits to domestic situations, the difference in treatment between domestic and cross-border situations, are all examples of situations which may affect neutrality and therefore, create obstacles as to an efficient allocation of resources.

In this regard, it is relevant to analyse how tax treaties and EU law may affect group taxation and contribute to eliminate tax obstacles deriving from the limitations of the existing group taxation regimes.

Part III of this thesis analyzed the influence of tax treaties on tax groups. Typically, tax treaties do not contain specific provisions dealing with group taxation. This is not surprising since the underlying premise of treaties is the separate legal entity approach, that is, each separate legal entity is treated as a separate taxpayer. Nevertheless, tax treaties can impact on group taxation. In the absence of such provisions, the application of tax treaties to tax groups should follow the interpretation of the general rules provided in the OECD MTC.

Primarily, this requires determining the treaty entitlement of groups, notably if they constitute a person and if they can be considered as residents of a Contracting State. In this regard it was concluded that, from a tax perspective, groups do not give rise to separate legal entities nor do they constitute different taxable units treated as a body corporate according to the tax laws of the Contracting State in which they are organized. Therefore, the tax group should not constitute a person for treaty purposes but rather its group members.

The following issue is to determine tax residence and whether the inclusion in a tax group can affect the status as a resident for treaty purposes. In the past, it was disputable whether subsidiaries would maintain their status as liable to tax and therefore residents for treaty purposes as regards some group taxation regimes. Currently, the approach is to consider that group members of a tax group maintain their tax resident status and are considered residents for the purposes of claiming treaty entitlement.

The alignment between domestic and treaty residence may be challenged in the case of dual resident companies. In the case a company is resident in two States, tax treaty provisions allow determining the relevance residence for treaty purposes. This may impact both the allocation of taxing rights as regards the income taxation of the different group members, the application of the relevant distributive rules as well as the possible claims under the non-discrimination article in tax treaties.

Another aspect is to consider the relation between tax treaties and cross-border group taxation. There are some cross-border group taxation regimes in force and it is relevant to determine whether the limitation and allocation of taxing rights in tax treaties may affect cross-border income consolidation in situations where the application of those cross-border tax groups is not specifically provided for in the tax treaty itself (and its Protocol). It this context, it was argued that cross-border tax groups do contravene tax treaties and the respective distributive provisions. The purpose of tax groups is to treat a group of companies as a single entity. In this regard, it assumes, *inter alia*, the set off of profits and losses of different group members. Therefore, the income consolidated at the level of the parent company includes income of other members of the group and their cross-border taxation may collide with the allocation of taxing rights provided in tax treaties. The best solution is then to include a specific provision in the treaties, such to safeguard the application of cross-border group taxation.

The effect of tax treaties as regards the cross-border dimension of groups is particularly influenced by the non-discrimination provision of Article 24. Article 24 establishes the principle of non-discrimination in tax treaties. The various paragraphs of Article 24 list the circumstances which, for tax treaty purposes, should not be subject to discriminatory treatment. For the purpose of determining if a particular situation is protected under one of the clauses of Article 24, a test should be performed: to compare the taxpayer with a hypothetical situation in which he would be either a national or a resident of the other contracting State. If in that hypothetical situation the taxpayer would benefit from the application of the relevant legislation, then the non-discrimination provision is being breached. It is not required that all circumstances are entirely identical except with regard

to the specific factor protected under one of the non-discrimination provisions. The requirement is that the relevant factor for the adverse treatment is within one of the paragraphs of Article 24 even if other conditions that are merely incidental are not exactly the same.

There is no clear overview of the policy surrounding the non-discrimination article. This creates uncertainty when dealing with the interpretation and application of this provision and its exact scope. The main goal of tax treaties is to facilitate international trade by minimizing barriers in the exchange of goods and services across national boundaries. For that purpose, tax treaties fulfil different purposes, among which, preventing discriminatory treatment. Determining the treaty purposes is relevant for the interpretation process under Article 31 (1) VCLT. The non-discrimination provision determines a special purpose of tax treaties and therefore, should be subject to a functional and teleological interpretation.

Tax treaties do not address tax groups' situations although there are some references in its Commentary, in particular as regards the application of the non-discrimination clauses of Article 24 in a group taxation context.

Paragraph 1 does not provide any reference although it does include one example that confirms its application to tax group situations. It has been demonstrated that this provision will apply in the case of companies that are resident in the same State but where a company is denied the possibility of being a group member because its nationality is from another State.

The OECD MTC Commentary to paragraph 3 of Article 24 appears to exclude the possibility of claiming tax treaty non-discrimination in the context of group taxation situations involving PEs. According to the OECD reasoning, this would be due to the fact that this paragraph relates only to the taxation of the profits of the PE itself. However, it has been demonstrated by several examples that paragraph 3 does indeed apply as to support the inclusion of PEs in tax groups. Essentially, the participation of a PE in a tax group relates to the profits (and losses) of the PE itself. Therefore, at least whenever the relationship of the PE with other group members affects the taxation of the PE itself, then such relation is relevant for the application of paragraph 3 to PEs in the context of group taxation regimes.

The application of the capital ownership in paragraph 5 of Article 24 to tax groups requires once again determining whether this provisions is applicable at all in the context of group taxation and if so, to what extent, that is, effectively

requiring extending groups to cross-border situations or differently, limited to the tax jurisdiction of each State involved.

It was submitted that the OECD MTC Commentary to Article 24 does not preclude its application to tax groups. In fact, its application to tax groups is quite relevant as demonstrated by several examples.

The Commentary does indeed exclude situations where the application of Article 24 would lead to combining the effect of the taxation of the parent and subsidiary resident in two different States. In other words, taxpayers may not rely on the non-discrimination provision to claim extending group taxation to cross-border situations. This conclusion is logical considering that a fundamental distinction in tax treaties is between residents and non-residents and subject and not-subject to tax. Tax treaties allocate taxing rights and the interpretation and application of tax treaty non-discrimination should not affect such allocation. Ultimately, the extension of groups to cross-border situations could lead to some situations of double non-taxation, which would be contrary to the object, and purpose of tax treaties. On the contrary, Article 24 is indeed applicable to extend the benefits of group taxation when the affiliated companies are resident in the same State. In that event, the State in which the companies are located is able to take into account both the losses and the profits, that State has jurisdiction to tax all its resident companies. This is particularly the case of grouping profits and losses between domestic subsidiaries held by a parent company resident in another State. Therefore, the capital ownership provision should be applied to the extent that the distributive rules do not preclude the State that is applying the group taxation regime to take into account the results of the other member(s) of the group. This conclusion is applicable irrespective of the type of group taxation regime at stake.

The application of paragraph 4 of Article 24 may be applied to tax groups in the context of a per-element analysis.

Therefore, a question to be dealt with when analysing the application of tax treaty non-discrimination to group taxation regimes is whether the per-element approach is also possible in the context of tax treaties. It has been submitted that it is possible to adopt a more liberal approach to the interpretation of non-discrimination in tax treaties that does not require identification of all facts but only a similarity of the relevant facts regarding the specific instance at stake. Therefore, for the construction of the comparator, it is possible to take into account only the elements that are required for the application of the specific rule in question. As demonstrated with concrete examples, by making a separate analysis for each element and restricting it to domestic effects would allow

achieving a result which complies both with the wording and the purpose of tax treaty non-discrimination. When the application of the non-discrimination clauses is limited to domestic effects (e.g. interest deduction limitations) there is no shifting of profits or losses that affects the allocation of taxing rights under tax treaties nor does it go against the wording of Article 24.

This thesis also explored the possible interaction of tax treaty non-discrimination provisions and its application in the specific context of group taxation situations. The existing non-discrimination provisions of tax treaties do not adopt a wide neutrality approach, they only cover particular grounds of discriminatory tax treatment. Therefore, situations of complex discrimination where the difference in treatment arises due to more than one criterion are perfectly conceivable. As demonstrated by some examples in this thesis, there are several situations involving tax groups where complex discriminatory situations may arise. In that event, it has been submitted that multiple tax treaty non-discrimination provisions might apply cumulatively when the discriminatory treatment is due to a multiplicity of factors that require the combined application of the non-discrimination provisions in order to remedy the disadvantage.

The combined application of non-discrimination clauses may involve clauses of the same treaty. Considering that a State has made a commitment against two types of different discrimination clauses in the same tax treaty there seems to be nothing to prevent its combined application. If a State signs a tax treaty with a model of OECD Article 24, it is assuming that it will not provide discriminatory treatment to its treaty partner on the specific grounds covered by the various clauses of the non-discrimination article irrespective of their being applied separately or cumulatively. This combined application, however, may be limited by the fact that not all the clauses of Article 24 appear to provide for the same standards of protection. For instance, paragraph 3 addresses *less favourable taxation* while paragraph 5 covers *other or more burdensome taxation and connected requirements*. The combined application of these provisions may only occur in the case a taxpayer falls within the scope of both non-discrimination clauses being invoked. This may imply that combining both paragraphs 3 and 5 would lead to the lowest degree of protection.

Similarly, the combined application of non-discrimination clauses may involve combining different non-discrimination clauses of different tax treaties. In this case it has been argued that whenever two (or more) different tax treaties have an identical non-discrimination article, it seems possible to claim the combined application of non-discrimination clauses of each of those treaties. Arguably this has a particular impact on group taxation as it allows invoking the capital ownership provision of different treaties such to allow extending the benefits of a

tax group to resident companies held directly and indirectly by different companies resident in different States all of which having an identical capital ownership provision.

Finally, it was also argued that it is possible to invoke the protection of discriminatory treatment provided in multiple agreements other than tax treaties. For its relevance to this study, the analysis focused on the application of tax treaties and EU Law. The approach to non-discrimination in general and to group taxation regimes in particular can be analysed separately from an EU Law or tax treaty perspective. However, a closer analysis shows that a causal link exists between these two realities: the interpretation of the non-discrimination requirement under the fundamental freedoms seems to be influencing the interpretation of the non-discriminatory obligations in tax treaties.

It is possible to combine both the application of Article 24 and the TFEU freedoms. In that case, the use of non-discrimination provisions in tax treaties may constitute a valuable alternative to overcome the limitations in the (territorial) scope of the fundamental freedoms. This is applicable in the context of group taxation regimes considering that the application of the TFEU freedoms is restricted to the freedom of establishment. The combined application of tax treaty non-discrimination provision with EU law allows to explore and, in certain cases, to expand the boundaries of the TFEU protection beyond mere intra-Community situations.

Part IV assessed the influence of EU on cross border group taxation. The current status of EU corporate income tax law harmonization is still relatively scarce. Despite the importance of the current existing Directives with impact on groups of companies, they have not been able to eliminate the underlying existing problems. In addition, the most ambitious proposals of the Commission, first in the field of cross-border loss relief and more recently on a CCCTB, have not been approved and it is unlikely that such approval will be extended in the short-term.

Therefore, and in the meantime, Courts have been forced to deal with a large number of challenges by groups to national regimes that they consider to be discriminatory. In particular, the CJ has been called upon for rulings on several cases which impact on groups of companies in order to try to remedy some of the situations which the EU legislature, so far, has been unable to materialize in legislation. The absence of such legislative framework has obviously jeopardized harmonization and the possibility to have a cross-border group consolidation at the EU level. In the meantime, the CJ has pursued its role of negative harmonization, relying on the interpretation of the fundamental freedoms to

scrutinize the extent to which the existing national group taxation regimes comply with the TFEU.

As the CJ consistently repeats, direct taxation is still within the competence of the Member States. Since harmonization measures in the direct tax area remain scarce, Member States must ensure that their national legislation complies with the fundamental freedoms that govern the Internal Market. The assessment of whether a particular measure is compatible with EU Law is a competence of the CJ. Nevertheless, the delimitation of the tax jurisdiction exercised by the Member States remains outside the scope of EU Law. Member States are free to define and allocate their taxing rights. Therefore, the Treaty freedoms are only engaged once a Member State has decided to assert tax jurisdiction over a certain person or item of income, ensuring that such jurisdiction is applied in accordance with the Treaty.

The assessment as to the compatibility of existing group taxation regimes with EU Law is then based on the fundamental freedoms. The CJ case law on the application of the EU fundamental freedoms to group taxation regimes has already dealt with a range of different situations: from addressing a broader question of whether a domestic group taxation regime should be extended to cross-border situations, to different other situations involving the definition of the group perimeter, and also the possibility of extending specific benefits in an intra-Community context. The decisions of the CJ involving tax groups – and in particular, as regards the transfer of losses within international groups of companies – has given rise to some of the most important judgments concerning national direct taxes. In fact, the issue of transfer of losses within a cross-border context is probably the most significant one. Clearly, because the judgment in *Marks & Spencer* undoubtedly constitutes one of the most important rulings of the Court concerning direct tax matters and has set the precedent for subsequent case law. And, fundamentally, because the CJ reasoning in that case gave rise to all kinds of different questions.

In order to assess whether a specific tax measure is discriminatory, the CJ engages in a comparability test. When it comes to the comparability standard, it is apparent in examining the case law that there is no homogeneous approach which leads to uncertainty of what constitutes a breach of EU Law. In the first stages of direct tax cases, the Court stated that residents and non-residents were not generally comparable but became comparable by virtue of exercising their taxing rights over them – comparability through taxation.

The development of the case law throughout the years has led to establishing comparability predominantly as regards the aim of the measure tested against the

fundamental freedoms. In this approach, the Court looks at the objective pursued by the national legislation and ascertains whether, in light of this objective, it is sensible to make a distinction between domestic and cross-border situations. This is also the most common approach when the Court engages in comparability when assessing domestic group taxation regimes. However, even here there is some uncertainty surrounding the Court's approach. In some cases, the Court did not engage in comparability at all whereas in others, it established comparability based on the intention of the taxpayer to benefit from a particular tax provision.

From the perspective of group taxation regimes, the Court's analysis is no different. Predominantly (although not exclusively) the CJ looks at the aim of the legislation at stake so as to determine the existence of discriminatory treatment.

For the purposes of determining the relevant comparator, the Court engages in a vertical comparison: the treatment of purely domestic groups as compared with cross-border groups. The existence of a discriminatory treatment arises as from the moment that the benefits of a tax group are available domestically but not cross-border. Conceptually, the CJ approach is understandable from an Internal Market perspective but is open to criticism when considering the interaction between the respect of the Member States' tax sovereignty and the scope of application of the fundamental freedoms. As from the moment that the Court considers that a Member State must take into account the results (for example, losses) of a separate taxpayer resident in another Member State, it is in fact asserting its jurisdiction over that taxpayer.

Another relevant aspect as regards comparability within the context of tax groups is whether the CJ should accept – in certain cases – a horizontal comparison, meaning in this case to compare subsidiaries with PEs. The CJ accepts this standard of comparison from a Host State perspective (which can in fact be traced back to the earlier ages of the CJ case law on direct taxation) while rejecting such comparison from the perspective of the Home State. The Court's argument is that foreign PEs and foreign subsidiaries are different as regards the powers to tax of the Home Member State. In abstract, this argument is entirely correct but the CJ in this case appears to ignore the aim and effects of the some group taxation regimes that assimilate subsidiaries to PEs, which would precisely render such comparison possible.

Direct tax measures that restrict the exercise of the fundamental freedoms are capable of being justified by overriding reasons in the public interest. In direct tax cases, the commonly accepted justifications are the effectiveness of fiscal supervision, the need to safeguard fiscal cohesion, the principle of territoriality,

the prevention of abuse, the balanced allocation of the powers to tax and the need to prevent that losses may be taken into account twice.

Throughout the almost 30 years of direct taxation case law, the use of these justifications has led to numerous questions as to their exact meaning, scope and possible overlaps between them. This is particularly apparent as regards group taxation. It was in the group taxation case law that the Court applied, for the first time, the justification based on the need to preserve the balanced allocation of the powers to tax. Also an innovative approach in this cluster of cases was the fact that the Court started pairing justifications together with little explanation, raising the question as to autonomous value of each justification and its precise scope of application.

The principle of territoriality is a commonly invoked justification for a breach of the fundamental freedoms by Member States. This justification is applied by the Court based in its international law meaning and not based on its tax law meaning in the sense of delimitation of tax jurisdiction.

The justification based on the need to preserve the coherence of the tax system has been accepted when there is a direct link between a particular tax advantage and an offsetting tax levy. The existence of such direct link may arise if the tax advantage and levy are imposed on the same taxpayer in relation to the same tax. It represents the acknowledgment by the Court that a Member State may apply a restrictive measure if it is systematically linked to a subsequent measure that neutralizes its restrictive effect. In that sense, it applies within the framework of a national tax system. The relevance of coherence as a rule that aims at safeguarding the internal coherence of the tax system is apparent in group taxation cases that deal with a domestic perimeter of group companies which have a foreign link (e.g. grouping domestic companies held by a foreign parent/intermediary holding). In these cases it is apparent that only one jurisdiction is involved, by contrast to other case law where the Court invoked the balanced allocation of the powers to tax involving cross-border loss relief, that is, shift of income between different Member States.

The Court has on several occasions recognised that, in principle, Member States may be justified in taking otherwise discriminatory tax measures in order to prevent abuse of law. The Court has held, in principle, that this justification is permissible only when the rule was targeted sufficiently to affect only wholly artificial arrangements. The fundamental issue as regards the interpretation of this justification in the field of group taxation derives from the fact that the Court appears to have given a broader meaning to this justification. A first explanation may derive from the inherent artificiality involving group taxation regimes. The

transfers of income between companies of the group rely essentially on accountancy adjustments without underlying transactions.
A second explanation relies on the fact that the prevention of tax avoidance in this context has been tied with the balanced allocation of the powers to tax. In other words, the broader meaning given by the Court to the prevention of tax avoidance is explained by the fact that this meaning was accepted when its application was combined with the need to prevent jeopardizing the balanced allocation of the powers to tax.

Another of the accepted justifications is the prevention of double use of losses. By accepting this justification the CJ wants to prevent the concurrent use of benefits in two different tax jurisdictions.

The preservation of the balanced allocation of the taxing rights between Member States is one of the most recent justifications recognized by the CJ which still has not impeded it from turning into one of the most frequently argued. Initially, the CJ accepted this justification in combination with other justifications. The Court referred to the relevance of this justification to ensure the power of Member States to tax the activities carried out in their territory. This justification has been successfully invoked within the context of group taxation when possible cross-border flows of income (positive or negative) are involved. In this regard, the CJ uses this justification to uphold applying to the economic activities of a company only the tax rules of the respective Member State of residence in respect of both profits and losses.

The issues subject to more controversy as from the moment that the Court accepted this (new) overriding reason in the public interest, concerns the combined effect of the justifications used together raising the doubt of whether and which justifications could serve as an autonomous justification for a restrictive measure and, if so, what was its precise scope of application. Again the case law on group taxation is crucial considering that the triptych use of justifications was applied for the first time when assessing the compatibility of a tax group regime with the fundamental freedoms. In addition, doubts arose as to the exact scope of and differences between the above justifications.

Although there is a relation between the justifications based on the principle of territoriality, coherence of the tax system and balanced allocation of the powers to tax, they do not have the exact same meaning. The justification based on the balanced allocation of the powers to tax complements the other justifications as it addresses specifically the situations arising from the possible interaction of two tax systems of two different Member States.

As regards the mere prevention of abuse with the broad criterion followed by the Court, it appears to serve the purpose of preserving the balanced allocation of the powers to tax. Therefore, the prevention of tax avoidance constitutes a manifestation or a sub-category of the justification of the balanced allocation of the powers to tax between Member States in the sense that represents a risk that jeopardizes the balanced allocation of taxing rights.

The double use of losses is also a sub-category or a manifestation of the balanced allocation of the powers to tax and an autonomous justification. The CJ case law demonstrates that the double use of losses is only accepted as a justification when there is a transfer of one loss from one jurisdiction to the other jurisdiction, thus affecting the balanced allocation of the powers to tax between Member States. Again this was apparent from the CJ case law dealing with the definition of a domestic perimeter of group companies with a foreign link where the CJ affirmed the secondary role of the double use of losses.

The last stage of the rule of reason lies in the analysis of proportionality, which entails pondering the limitations on free movement against the accepted overriding reasons in the public interest such that the application of the latter does not harm the former more than is necessary.

In the context of group taxation regimes, the proportionality test is inherently related to cross-border loss relief and the no-possibilities test. In *Marks & Spencer*, the CJ ruled that a State is obliged to import foreign losses when those losses can no longer be used locally. This judgement in the context of a group relief system, posed a significant challenge for domestic courts and governments that was to determine the exact meaning of final losses, how to calculate them and the circumstances that determine finality. Moreover, it also led to a significant number of questions as to what was the CJ's rationale to follow this reasoning, if its reasoning applied to other group taxation regimes, and whether it limited the entities that could claim cross-border loss relief.

But a first striking aspect in the CJ case law was the fact that it disregarded the relevance of cash-flow disadvantages. One of the primary reasons to elect to form a tax group is the possibility to immediately offset losses with profits. In that regard, the cash-flow advantage deriving from this advantage is fundamental to the choice to form a group. Therefore, the fact that the CJ did not acknowledge the relevance of cash-flow advantages – specifically considering that the related disadvantages had already been scrutinized several times as infringements to the freedoms – and only accepted that final losses can be used cross-border can be criticised.

The adoption of a deduction recapture mechanism would clearly be more compliant with the goal of a tax group, would take into account the justifications accepted by the CJ and would be more in line with the proportionality test. As from the moment that the Court found a restriction to the freedom of establishment taking into account the aim of group taxation regimes, it should have favoured the adoption of a deduction recapture mechanism rather than a solution based on the finality of losses.

This solution would not only be more in line with the fundamental freedoms, as it would avoid all kinds of interpretative issues as regards determining the meaning of final losses. The underlying rationale for the adoption of this solution may be traced back to the case law in the field of individual income tax and the *Schumacker* doctrine: the possibility to take into account the losses once. This commonly called always somewhere approach, however, is not absolute: it is limited to an *ab initio* possibility to use the losses where they arose. Only if that possibility no longer exists – but had existed at some moment – is the other Member State forced to take the foreign losses into account.

From the perspective of the Member State that imports the foreign losses, the Court's approach is based on the existence of a discriminatory treatment. Therefore, a Member State is only obliged to take into account foreign losses if identical losses would be considered in a purely domestic situation.

As regards the circumstances that give rise to final losses, it is submitted that both legal and factual exhaustion meet the requirements of finality. This is the solution that better fits in with the wording of the CJ after the *Marks & Spencer* judgment and also avoids tax planning strategies as to allow the recognition of foreign losses in the case the finality would be limited to factual exhaustion.

The CJ appears to adopt an all or nothing approach as regards final losses. Even if it is apparent that not only foreign generated losses can be used in the respective State where they were incurred, Member States are not obliged to import the unused foreign losses based on a pro-rata approach, as long as even only a very small part of those losses will be used in the respective State where incurred. It is submitted that this is an incorrect approach followed by the CJ, which is not in line with the principle of proportionality.

Another relevant issue is the case of concurrence between domestic and foreign (final) losses. In this event it has been submitted that, in principle, there is no priority as to the use of either of the losses.

As regards the calculation of the foreign generated losses, in principle, they should be subject to re-calculation under the rules of the Member State that imports those losses. However, this rule is subject to the lower of the two amounts: (i) the amount determined by the State where they were originally incurred if lower that the re-calculation by the State where the cross-border loss relief occurs; or (ii) the amount recalculated under the rules of the Member State that imports the losses if lower than the amount under the rules of the State where originally incurred.

In addition, it has also been submitted that the proportionality test and specifically, the finality of the losses as determined by the CJ in the context of a group relief system, is equally applicable in the context of other group taxation systems within the various EU Member States.

Finally, the CJ case law also does not allow setting any limitation on which entity is entitled to claim cross-border group relief. Therefore, it is proposed that not only vertical upstream loss relief but also horizontal and downstream loss relief is possible when the conditions of the no possibilities test are met.

The CJ case law supports the view that a taxpayer may rely on the EU Treaty freedoms to invoke certain advantages in cross-border situations that are otherwise available domestically only within a tax group. Therefore, it is possible in principle for a taxpayer to claim certain elements – per-element approach - of group taxation regimes without the need to enter into a cross-border tax group. This conclusion is not challenged either by nature and features of the particular group taxation regime at stake or by the prospect of cherry-picking related to the possibility of taxpayers choosing specific benefits of a tax group.Therefore, it may be possible for each taxpayer to invoke separate elements of a group taxation regime in a cross-border situation. This requires testing each individual element against the TFEU freedoms. Absent any previous decision in the specific context of group taxation this assessment relies on the application of the previous case law by analogy.

Finally, there are other possible situations dealing with national legislation involving tax groups that may be challenged but those are based on the discriminatory treatment given between domestic and cross-border scenarios.

A very limited number of Member States provide for both domestic and cross-border tax group regimes. Typically, both domestic and cross-border regimes exist in parallel. The underlying concept is that those Member States, while providing for some degree of tax group integration on a cross-border basis, still do not provide identical benefits as granted to purely domestic situations.

Such existing differences also require an assessment as to their compatibility with the fundamental freedoms. Considering the CJ approach, those differences most likely constitute a *prima facie* restriction to the freedom of establishment. While arguably some of them may be justified by the most common justifications accepted by the CJ within the context of a cross-border group taxation scenario (prevent the balanced allocation of the powers to tax or risk of tax abuse), others might in fact give rise to breaches of the freedom of establishment.

Samenvatting

In dit proefschrift wordt de invloed besproken van belastingverdragen en EU-recht op regelingen voor belastingheffing naar het groepsinkomen van vennootschappen. In het bijzonder wordt onderzoek gedaan naar de wijze waarop bestaande bilaterale belastingverdragen en EU-regelgeving dergelijke regelingen kunnen beïnvloeden. De achtergrond van het onderzoek wordt gevormd door het gegeven dat belastinggroepen worden gevormd vanuit het streven naar doelmatigheid en een neutrale fiscale behandeling van de verschillende wijzen waarop activiteiten worden uitgebreid. Veel groepen opereren wereldwijd. De positie van belastingplichtigen die uitsluitend in het land van vestiging zaken doen zou niet als gevolg van verschillen in belastingregels moeten afwijken van die van belastinggroepen, met name waar deze regels niet in overeenstemming zijn met de economische werkelijkheid. Deze ongelijke behandeling leidt ertoe dat wordt gekozen voor investeringsvormen die doorgaans vanuit economisch oogpunt niet het meest efficiënt zijn.

Deel II betreft de kwestie van de relevantie en kwalificatie van fiscale eenheden. Het creëren van een groep houdt verband met de ontwikkeling van de commerciële activiteiten van een onderneming, hetzij omdat deze haar activiteiten wil diversifiëren of uitbreiden, hetzij omdat zij zich in een andere markt wil positioneren. Groepen ondernemingen vertonen bepaalde eigenschappen en een eigen dynamiek, zij vormen een groep entiteiten die, hoewel zij elk individueel hun juridische onafhankelijkheid bewaren, onderworpen zijn aan een gemeenschappelijke bedrijfsstrategie. Sturend hierin is dat alle leden van de groep hun bijdrage leveren om winstmaximalisatie te bereiken. Dit brengt mee dat alle middelen zodanig worden ingezet dat de hoogste graad van efficiency wordt bereikt.

Het bestaan van concerns geeft aanleiding tot een nieuw model waarin de bedrijfsactiviteiten als geheel worden bezien, in plaats van elke onderneming afzonderlijk. Dit model gaat uit van een functionele in plaats van een formele benadering. Als de rechtspersonen onder gemeenschappelijke controle staan en economisch zijn geïntegreerd, behoren alle rechtspersonen die onderdeel uitmaken van de groep gezamenlijk te worden bezien als één onderneming, onafhankelijk van hun formele rechtsvorm.

De wijze waarop ondernemingen worden gestructureerd wordt bepaald door het streven naar maximale economische prestaties. Een belastingplichtige die economische activiteiten uitoefent of uitbreidt moet keuzes maken. Eén van de belangrijkste beslissingen die moet worden genomen als activiteiten worden

uitgebreid of gediversifieerd betreft de wijze waarop dit geschiedt: ofwel uitbreiding door het opzetten van een aparte rechtspersoon, ofwel uitbreiding van de bestaande onderneming. Die keuze kan worden ingegeven door een veelheid van zakelijke overwegingen, maar ook door de eventuele fiscale gevolgen, gezien het fundamentele verschil tussen een onderneming die fiscaal wordt behandeld als een aparte entiteit, terwijl dat bij een onderneming zonder rechtspersoonlijkheid niet het geval is. Het feit dat een belastingstelsel in het algemeen uitgaat van de individuele benadering van belastingplichtigen, waarin elke onderneming als een aparte entiteit wordt beschouwd, brengt bepaalde fiscale voor- en nadelen met zich mee.

Een belastingstelsel moet conceptueel zijn gebaseerd op drie beginselen: billijkheid, doeltreffendheid en eenvoud. Dit betekent dat een belastingstelsel in een optimaal scenario neutraal zou moeten zijn en niet van invloed op de wijze waarop een belastingplichtige zijn activiteiten vorm geeft. De keuzes die een belastingplichtige maakt – waaronder de keuze voor een organisatievorm met of zonder rechtspersoonlijkheid – zouden uitsluitend moeten worden ingegeven door zakelijke overwegingen.

De benadering van belastingplichtigen als aparte entiteit leidt echter tot verschillen in de fiscale behandeling van ondernemingen met en ondernemingen zonder rechtspersoonlijkheid. In een groepsbelastingregime kan de commerciële werkelijkheid van een groep fiscaal worden onderkend. Door (althans tot op zekere hoogte) een ongelijke fiscale behandeling van gelijksoortige structuren te voorkomen, wordt de invloed die dergelijke verschillen in fiscale behandeling op het gedrag van belastingplichtigen heeft verminderd, waarmee de doelstellingen van het belastingregime worden gediend.

De fiscale redenen die ten grondslag liggen aan de keuze voor groepsbelastingregimes zijn gelegen in dezelfde beginselen als die van een belastingstelsel: doeltreffendheid, billijkheid en eenvoud.
In de huidige geglobaliseerde wereld is het met name van belang om groepsbelastingregimes te bezien vanuit internationaal perspectief. De argumenten die gelden voor de keuze voor groepsbelastingregimes vanuit nationaal perspectief zijn ook van toepassing op internationaal en EU-niveau. Het grensoverschrijdende element veroorzaakt extra problemen waar het gaat om de behandeling van de verschillende entiteiten binnen de groep als individuele entiteit. Dit wordt veroorzaakt door de beperkingen die inherent zijn aan het belastingrechtsgebied en de mogelijkheid om buitenlandse belastingplichtigen aan de heffing te onderwerpen, de mogelijk elkaar overlappende belastingrechtsgebieden die aanspraak maken op het belasten van elk van de ondernemingen die deel uitmaken van de groep, en de winstallocatie die

voortvloeit uit het arm's length beginsel. Billijkheid en doeltreffendheid in het bijzonder vormen wezenlijke eigenschappen van het internationale belastingrecht. De huidige regels voor de internationale allocatie van inkomsten tussen de staten worden hoofdzakelijk bepaald door bestaande bilaterale belastingverdragen.

Belastingverdragen vormen het fundamentele instrument voor het regelen van internationale fiscale relaties tussen staten, en hebben tot doel obstakels op fiscaal gebied uit de weg te ruimen. In dat opzicht dragen zij bij aan een doeltreffende verdeling van middelen. Bovendien leiden het voorkomen van dubbele belastingheffing en het fiscale non-discriminatiebeginsel tot een rechtvaardiger belastingheffing binnen groepen ondernemingen.

De fundamentele doelstelling van EU-recht – de interne markt zonder grenzen – wordt gekenmerkt door het wegnemen van obstakels die het vrije verkeer tussen de Lidstaten in de weg staan. Het economisch beleid dat hieraan ten grondslag ligt heeft tot doel het bereiken van een vrije en doeltreffende toewijzing van middelen, alsmede een gelijke behandeling van binnenlandse en grensoverschrijdende situaties. In feite is EU-recht enigermate vergelijkbaar met de doelstelling van fiscale eenheden: neutraliteit en de benadering van het gehele EU-gebied als één enkel land, zoals fiscale eenheden tot doelstelling hebben fiscaal als één enkele entiteit te worden behandeld.

Veel lidstaten kennen groepsbelastingstelsels. Uit het onderzoek is gebleken dat tussen deze groepsbelastingstelsels grote verschillen bestaan, te beginnen bij de fundamentele keuze van de mate van economische integratie. De meeste stelsels zijn uitsluitend van toepassing op de binnenlandse ondernemingen in deze lidstaten. Als gevolg hiervan kunnen ondernemingen die in een andere Lidstaat gevestigd zijn geen gebruik maken van het groepsbelastingstelsel van de lidstaat van hun moedermaatschappij.

Zelfs de schaarse lidstaten die wèl beschikken over een groepsbelastingstelsel dat rekening houdt met grensoverschrijdende activiteiten, stellen niet dezelfde eisen waar het gaat om fiscale eenheden die uitsluitend zijn samengesteld uit binnenlandse ondernemingen en fiscale eenheden die ook buitenlandse ondernemingen omvatten. Zelfs in regimes die grensoverschrijdende elementen erkennen wordt integratie doorgaans in mindere mate bereikt dan in binnenlandse regimes.

Het beperken van belastingvoordelen voor fiscale eenheden tot binnenlandse situaties en de verschillende fiscale behandeling tussen binnenlandse en grensoverschrijdende situaties zijn voorbeelden van maatregelen die hun invloed

hebben op de neutraliteit van de belastingheffing, en in dat opzicht derhalve obstakels vormen voor een doeltreffende toedeling van middelen.

Vanuit deze optiek is het van belang om onderzoek te doen naar de invloed die belastingverdragen en EU-recht hebben op de belastingheffing van groepen, en in hoeverre deze bijdragen aan het wegnemen van belemmeringen die het gevolg zijn van de beperkingen binnen de bestaande groepsbelastingregimes.

In deel III van dit proefschrift wordt de invloed van belastingverdragen op fiscale eenheden onderzocht. Gewoonlijk bevatten belastingverdragen geen specifieke bepalingen waarin de belastingheffing van groepen wordt geregeld. Dit mag niet verbazen, aangezien de aan verdragen ten grondslag liggende gedachte uitgaat van een individuele benadering van entiteiten, dat wil zeggen dat elke individuele juridische entiteit fiscaal wordt beschouwd als een afzonderlijke belastingplichtige. Desniettemin kunnen belastingverdragen van invloed zijn op de belastingheffing van groepen. Nu dergelijke bepalingen niet voorhanden zijn, moet de toepassing van belastingverdragen geschieden volgens de algemene regels die zijn opgesteld in het OESO Modelverdrag.

In de eerste plaats vereist dit de vaststelling van de vraag of de fiscale eenheid onder de verdragsbepalingen valt, met name indien zij als een 'persoon' wordt beschouwd en indien zij kan worden aangemerkt als 'inwoner' van een verdragsluitende staat. Wat dit betreft werd geconcludeerd dat fiscale eenheden fiscaal niet worden beschouwd als afzonderlijke juridische entiteiten, en evenmin als verschillende belastingplichtige eenheden die op grond van de belastingwetgeving van de verdragsluitende staat waarin zij zijn georganiseerd fiscaal als één rechtspersoon worden beschouwd. Als gevolg hiervan moet niet de fiscale eenheid, maar elk van de groepsleden als een 'persoon' in de zin van het belastingverdrag worden beschouwd.

Vervolgens dient de fiscale vestigingsplaats te worden vastgesteld, en moet de vraag worden beantwoord of het deelnemen aan een fiscale eenheid van invloed kan zijn op de status van 'inwoner' in de zin van het verdrag. In het verleden was het de vraag of dochterondernemingen hun status van belastingplichtige en dus 'inwoner' in de zin van het verdrag behielden, en als gevolg daarvan met betrekking tot sommige groepsbelastingregimes 'inwoner' in de zin van het verdrag waren. Naar huidig recht worden de leden van een fiscale eenheid geacht hun status van fiscaal ingezetene te behouden, en worden zij ook voor de toepassing van het belastingverdrag als 'inwoner' beschouwd.

De gelijkschakeling tussen binnenlands belastingplichtig en belastingplichtig in de zin van het verdrag kan een probleem opleveren ingeval ondernemingen een

dubbele vestigingsplaats hebben. Indien een onderneming in twee staten 'inwoner' is, kan de fiscale vestigingsplaats in de zin van het verdrag aan de hand van de verdragsbepalingen worden vastgesteld. Dit kan van invloed zijn op de toewijzing van het recht om belasting te heffen op de winst van de verschillende leden van de fiscale eenheid, de toepassing van de hierop betrekking hebbende regelgeving en de mogelijke aanspraken die voortvloeien uit het non-discriminatie-artikel in belastingverdragen.

Een ander aspect is de verhouding tussen belastingverdragen en de grensoverschrijdende belastingheffing van groepen. Er zijn enkele grensoverschrijdende groepsbelastingregimes van kracht en het is van belang dat wordt vastgesteld of de beperking en de toewijzing van het recht om belasting te heffen in belastingverdragen van invloed is op de consolidatie van grensoverschrijdende inkomsten in situaties waarin de fiscale behandeling van die grensoverschrijdende belastinggroepen niet specifiek in het belastingverdrag zelf (en het daarbij behorende Protocol) is geregeld. Binnen deze context is aangevoerd dat grensoverschrijdende fiscale eenheden in conflict komen met belastingverdragen en de respectievelijke bevoegdheidsverdelende bepalingen. Het doel van de fiscale eenheid is dat een groep ondernemingen als één afzonderlijke entiteit wordt beschouwd. Het uitgangspunt hierbij is, onder andere, dat de winsten en verliezen van de diverse groepsleden worden verrekend. Als gevolg hiervan omvat de op het niveau van de moedermaatschappij geconsolideerde winst- en verliesrekening winsten en verliezen van andere leden van de groep, en de grensoverschrijdende belastingheffing daarover kan in conflict komen met de toedeling van heffingsbevoegdheden als neergelegd in belastingverdragen. De beste oplossing is dan om in de verdragen een specifieke bepaling op te nemen teneinde de toepassing van grensoverschrijdende belastingheffing van groepen te waarborgen.

Het effect van belastingverdragen op de grensoverschrijdende dimensie van groepen wordt in het bijzonder beïnvloed door de non-discriminatiebepaling van artikel 24 OESO Modelverdrag. In artikel 24 is het beginsel van non-discriminatie in belastingverdragen vastgelegd. In de leden van artikel 24 worden de omstandigheden genoemd waarin belastingplichtigen niet aan een ongelijke behandeling in de zin van het verdrag onderworpen behoren te zijn. Om vast te kunnen stellen of een bepaalde situatie wordt beschermd door één van de definities van artikel 24, moet een toets worden uitgevoerd: De belastingplichtige dient te worden vergeleken met een hypothetische situatie waarin hij ofwel onderdaan van de andere verdragsluitende staat is, ofwel 'inwoner'. Indien de belastingplichtige in die hypothetische situatie door de toepassing van de relevante regelgeving in een voordelige positie zou geraken, wordt de non-

discriminatiebepaling geschonden. Het is niet noodzakelijk dat alle omstandigheden precies gelijk zijn, behalve wat betreft de specifieke factor die door één van de non-discriminatiebepalingen wordt beschermd. Wel noodzakelijk is dat de relevante factor voor het belastingnadeel binnen één van de definities van artikel 24 valt, ook indien andere – slechts incidentele - omstandigheden niet exact gelijk zijn.

Er bestaat geen duidelijk beeld van het fiscale beleid rond de non-discriminatiebepaling. Hierdoor ontstaat onzekerheid bij de uitleg en toepassing van deze bepaling en de precieze reikwijdte daarvan. De hoofddoelstelling van belastingverdragen is het faciliteren van de internationale handel door het beperken van barrières bij het over de nationale grenzen heen uitwisselen van goederen en diensten. Daartoe zijn in belastingverdragen verschillende maatregelen opgenomen, waaronder het voorkomen van ongelijke behandeling. Het vaststellen van de doeleinden van een verdrag is van belang voor de uitleggingsprocedure als neergelegd in artikel 31 lid 1 van het Weens Verdrag. De non-discriminatiebepaling vormt een bijzondere doelstelling van belastingverdragen en dient daarom te worden uitgelegd aan de hand van functionele en teleologische interpretatie.

Belastingverdragen richten zich niet op situaties waarin fiscale eenheden zijn betrokken, hoewel er in het Commentaar op sommige punten naar verwezen wordt, met name voor wat betreft de toepassing van de non-discriminatiebepalingen van artikel 24 op de belastingheffing van groepen.

Lid 1 voorziet in de nationaliteitsclausule, en bevat een verbod om onderdanen van de andere verdragsluitende staat aan een andere of zwaardere belastingheffing te onderwerpen dan die waaraan de eigen onderdanen in gelijke omstandigheden zouden zijn onderworpen.

Lid 3 verbiedt ongunstiger belastingheffing van een VI die een onderneming van de ene staat in de andere verdragsluitende staat heeft. Deze bepaling bedoelt te waarborgen dat de heffing van belasting bij de VI niet ongunstiger zal uitpakken. De formulering van lid 3 is duidelijk enger dat die in lid 1 (en 5) en biedt daarom minder bescherming. In die zin kan alleen worden gesproken van ongelijke behandeling in situaties die voortvloeien uit een zwaardere belastingheffing van VI's, hetzij als gevolg van een andere belastinggrondslag, hetzij als gevolg van een ander tarief. Het is echter mogelijk om tot een andere uitlegging te komen, waarin de term 'belasting' in lid 3 exact dezelfde betekenis zou moeten hebben als in lid 1, waardoor deze alle onderdelen van een belastingstelsel omvat. Hieruit volgt dat VI's zich zouden moeten kunnen beroepen op alle belastingregelingen die van toepassing zijn op ingezeten ondernemingen,

uitgezonderd die regelingen die naar hun aard niet tot VI's kunnen worden uitgebreid.

Lid 4 voorziet in een non-discriminatiebeginsel dat van toepassing is op aftrekbare uitgaven die aan inwoners van de andere verdragsluitende staat zijn betaald. Op dit non-discriminatiebeginsel voor aftrekbare uitgaven geldt een uitzondering, namelijk dat een staat een geclaimde aftrek op grond van het arm's length beginsel als bedoeld in de artikelen 9(1), 11(5) en 12(4) kan weigeren.

Tot slot bevat lid 5 een bepaling waarin een binnenlandse onderneming, waarvan het kapitaal geheel of ten dele, middellijk of onmiddellijk, in het bezit is van of wordt beheerst door inwoners van de andere verdragsluitende staat, niet aan enige belastingheffing of daarmee verband houdende verplichting worden onderworpen die anders of zwaarder is dan de belasting of daarmee verband houdende verplichtingen waaraan een soortgelijke onderneming waarvan het kapitaal in bezit is van inwoners van het belastingheffende land (non-discriminatie van buitenlands kapitaalbezit). Hoewel de bepaling niet de criteria vermeldt waarmee soortgelijkheid zou kunnen worden vastgesteld, geldt vandaag de dag als aanvaard dat een vergelijking moet worden getrokken tussen lokale ondernemingen waarvan het kapitaal in handen is van inwoners van een andere staat en soortgelijke ondernemingen die in handen zijn van inwoners van de eigen staat. De reikwijdte van de bepaling wordt beperkt tot situaties waarin de inwonende dochter is onderworpen aan ongunstiger belastingheffing omdat deze wordt beheerst door een buitenlandse in plaats van een inwonende onderneming.

Er bestaat geen duidelijk beeld van het fiscale beleid rond de non-discriminatiebepaling. Hierdoor ontstaat onzekerheid bij de uitleg en toepassing van deze bepaling en de precieze reikwijdte daarvan. De hoofddoelstelling van belastingverdragen is het faciliteren van de internationale handel door het beperken van barrières bij het over de nationale grenzen heen uitwisselen van goederen en diensten. Daartoe zijn in belastingverdragen verschillende maatregelen opgenomen, waaronder het voorkomen van ongelijke behandeling. Het vaststellen van de doeleinden van een verdrag is van belang voor de uitleggingsprocedure als neergelegd in artikel 31 lid 1 van het Weens Verdrag. De non-discriminatiebepaling vormt een bijzondere doelstelling van belastingverdragen en dient daarom te worden uitgelegd aan de hand van functionele en teleologische interpretatie.

Als aangegeven richten belastingverdragen zich niet op situaties waarin fiscale eenheden zijn betrokken, hoewel er in het Commentaar op sommige punten naar verwezen wordt, met name voor wat betreft de toepassing van de non-

discriminatie definities van artikel 24 in de context van belastingheffing naar het groepsinkomen.

Lid 1 bevat geen verwijzing, hoewel er één voorbeeld in wordt gegeven waarin de toepassing van het artikel op fiscale eenheden wordt bevestigd. Gebleken is dat deze bepaling van toepassing is in gevallen waarin ondernemingen fiscaal gevestigd zijn in dezelfde staat, terwijl een onderneming die een andere nationaliteit heeft de mogelijkheid tot voeging in de fiscale eenheid wordt onthouden.

Het Commentaar bij lid 3 van artikel 24 van het OESO Modelverdrag lijkt de mogelijkheid uit te sluiten van een beroep op non-discriminatie binnen de context van de fiscale eenheidsregeling waarbij VI's zijn betrokken. Volgens de redenering van de OESO zou dit te wijten zijn aan het feit dat lid 3 uitsluitend betrekking heeft op de belasting van winsten van de VI zelf. Verschillende malen is echter gebleken dat lid 3 wel degelijk van toepassing is waar het gaat om de voeging van VI's in fiscale eenheden. In essentie ziet de deelneming van een VI in een fiscale eenheid op de winsten (en verliezen) van de VI zelf. Als gevolg hiervan is deze relatie van belang voor de toepassing van lid 3 op VI's in de context van fiscale eenheidsregelingen, althans in gevallen waarin de relatie van de VI met andere leden van de fiscale eenheid de belastingheffing bij de VI zelf beïnvloedt.

De toepassing op fiscale eenheden van de regel inzake non-discriminatie van buitenlands kapitaalbezit als neergelegd in lid 5 van artikel 24 maakt het ook hier noodzakelijk om vast te stellen of deze bepaling überhaupt van toepassing is binnen de context van de belastingheffing van groepen en zo ja, in welke mate. Met andere woorden: of het daadwerkelijk moet gaan om groepen die grensoverschrijdend uitbreiden, of anderszins, namelijk dat de toepassing van de regel is beperkt tot de belastingjurisdictie van elke betrokken staat.

Aangevoerd is dat het Commentaar bij artikel 24 van het OESO Modelverdrag zich niet verzet tegen de toepassing daarvan op fiscale eenheden. Door middel van diverse voorbeelden is aangetoond dat het artikel wel degelijk op fiscale eenheden van toepassing is.

Het Commentaar sluit echter wel situaties uit waarin de toepassing van artikel 24 zou leiden tot een situatie waarin de moedermaatschappij en de dochter, gevestigd in twee verschillende staten, beiden in de heffing worden betrokken. Met andere woorden, belastingplichtigen kunnen geen beroep doen op de non-discriminatiebepaling om uitbreiding van de belastingheffing van groepen naar grensoverschrijdende situaties te vorderen. Dit is een logische gevolgtrekking,

gezien het feit dat er in belastingverdragen een basaal onderscheid wordt gemaakt tussen inwoners en niet-inwoners en belastingplichtig of niet belastingplichtig. Belastingverdragen wijzen heffingsbevoegdheden toe, en de uitlegging en toepassing van non-discriminatie in de zin van het belastingverdrag zou deze toewijzing niet behoren te beïnvloeden. Uiteindelijk zou de uitbreiding van groepen naar grensoverschrijdende situaties kunnen leiden tot dubbele non-heffing, hetgeen in strijd zou zijn met het voorwerp en de doelstelling van belastingverdragen. Artikel 24 is juist van toepassing om de voordelen van groepsbelastingheffing uit te breiden wanneer de gelieerde bedrijven in dezelfde staat zijn gevestigd. In dat geval kan de staat waar de ondernemingen gevestigd zijn zowel verliezen als winsten in aanmerking nemen; die staat is bevoegd om alle aldaar gevestigde ondernemingen in de heffing te betrekken. Op grond hiervan dient de bepaling inzake buitenlands kapitaalbezit zodanig te worden toegepast dat de regels inzake de verdeling van heffingsbevoegdheid geen belemmering vormen voor de staat die het groepsbelastingregime toepast om het bedrijfsresultaat van het andere lid/de andere leden van de groep in aanmerking te nemen. Deze conclusie geldt onafhankelijk van het type groepsbelastingregime dat van toepassing is.

Lid 4 van artikel 24 kan op fiscale eenheden worden toegepast binnen de context van een per element onderzoek.

Als gevolg hiervan moet in het onderzoek naar de toepassing van non-discriminatie op groepsbelastingregimes de vraag worden beantwoord of de per element benadering ook mogelijk is binnen de context van belastingverdragen. Aangevoerd is dat het mogelijk is om een ruimere benadering te volgen van de uitlegging van non-discriminatiebepalingen in belastingverdragen, waardoor niet het gehele feitencomplex behoeft te worden onderkend, maar het onderzoek kan worden beperkt tot de vergelijkbaarheid van relevante feiten in het voorliggende geval. Als gevolg hiervan is het voor de vergelijking van situaties mogelijk om alleen die elementen in aanmerking te nemen die vereist zijn voor de toepassing van de betreffende specifieke regel. Aangetoond is door middel van concrete voorbeelden dat, door elk element apart te onderzoeken en dit te beperken tot de binnenlandse gevolgen, een resultaat kan worden bereikt dat voldoet aan zowel de formulering als de doelstelling van de non-discriminatiebepaling in het belastingverdrag. Als de toepassing van de non-discriminatiebepalingen wordt beperkt tot de binnenlandse gevolgen (bijv. beperkte renteaftrek) wordt de toedeling van heffingsbevoegdheden in de zin van belastingverdragen niet aangetast door het schuiven met winsten en verliezen, en wordt ook geen inbreuk gemaakt op het bepaalde in artikel 24.

In dit proefschrift is ook onderzoek gedaan naar de mogelijke interactie tussen non-discriminatiebepalingen in belastingverdragen en de toepassing daarvan binnen de specifieke context van groepsbelastingheffing. De bestaande non-discriminatiebepalingen in belastingverdragen leveren geen breed spectrum aan neutraliteit op; zij zijn alleen van toepassing op een specifieke ongelijke fiscale behandeling. Het is dus zeer goed mogelijk dat er situaties ontstaan waarin sprake is van een complexe ongelijke situatie, omdat meerdere discriminerende criteria worden gehanteerd. In enkele voorbeelden in dit proefschrift is aangetoond dat er verschillende situaties denkbaar zijn waarin fiscale eenheden te maken krijgen met een complexe ongelijke behandeling. Aangevoerd is dat in dergelijke gevallen verscheidene non-discriminatiebepalingen binnen het verdrag cumulatief van toepassing kunnen zijn, indien de ongelijke behandeling te wijten is aan een complex van factoren die de gecombineerde toepassing van de non-discriminatiebepalingen vergen om het nadeel weg te nemen.

De gecombineerde toepassing van non-discriminatiebepalingen kan betrekking hebben op non-discriminatieclausules in hetzelfde verdrag. In aanmerking genomen dat een staat zich heeft gecommitteerd aan twee verschillende discriminatieclausules in hetzelfde belastingverdrag, kan de gecombineerde toepassing daarvan niet worden voorkomen. Indien een staat een belastingverdrag tekent waarin een model van artikel 24 OESO Modelverdag is opgenomen, wordt aangenomen dat deze staat op grond van de diverse clausules van de non-discriminatiebepaling niet zal overgaan tot een ongelijke fiscale behandeling van de verdragspartner, ongeacht of deze apart of cumulatief worden toegepast. Deze gecombineerde toepassing kan echter worden beperkt door het feit dat niet alle clausules van artikel 24 dezelfde mate van bescherming bieden. Zo heeft lid 3 betrekking op *niet ongunstiger belastingheffing*, terwijl lid 5 ziet op *belastingheffing die anders of zwaarder is en daarmee verband houdende verplichtingen*. De gecombineerde toepassing van deze bepalingen zal alleen optreden indien een belastingplichtige binnen de werkingssfeer van beide non-discriminatiebepalingen valt waarop een beroep wordt gedaan. Dit kan betekenen dat de combinatie van lid 3 en lid 5 tot de geringste mate van bescherming leidt.

In gelijke zin kan de gecombineerde toepassing van non-discriminatiebepalingen meebrengen dat verschillende non-discriminatieclausules in verschillende belastingverdragen worden gecombineerd. In dit geval is aangevoerd dat indien twee (of meer) verschillende belastingverdragen een zelfde non-discriminatiebepaling bevatten, het mogelijk lijkt om de gecombineerde toepassing van non-discriminatieclausules in elk van die verdragen in te roepen. Dit heeft duidelijk een bepaald effect op de belastingheffing van groepen, omdat aldus de bepaling inzake non-discriminatie van buitenlands kapitaalbezit in

verschillende verdragen kan worden ingeroepen. De voordelen van een fiscale eenheid kunnen dan worden uitgebreid naar ingezeten ondernemingen die direct of indirect worden gehouden door verschillende ondernemingen in andere staten, die alle een gelijkluidende bepaling inzake non-discriminatie van buitenlands kapitaalbezit hebben.

Tot slot werd ook aangevoerd dat het mogelijk is om de bescherming tegen ongelijke behandeling in te roepen die is opgenomen in vele andere overeenkomsten, niet zijnde belastingverdragen. In verband met het onderwerp van deze studie is het onderzoek beperkt tot de toepassing van belastingverdragen en EU-recht. Non-discriminatie in het algemeen en groepsbelastingregimes in het bijzonder kunnen ook los van EU-recht of belastingverdragen worden onderzocht. Nader onderzoek toont echter aan dat een causaal verband bestaat tussen deze twee realiteiten: de uitlegging van het non-discriminatievereiste in het licht van de fundamentele vrijheden lijkt van invloed te zijn op de uitlegging van de non-discriminatoire verplichtingen in belastingverdragen.

Tussen belastingverdragen en EU-recht bestaan zowel overeenkomsten als verschillen. Niettemin blijkt uit de jurisprudentie dat binnen de EU de beoordeling van het begrip non-discriminatie door nationale rechters wordt beïnvloed door het EU-recht.

Belastingverdragen en EU-recht dienen verschillende doeleinden, en de toepassing van bepalingen uit het verdragenrecht en het EU-recht leidt niet tot strijdige resultaten. Zij vormen op twee niveaus verplichtingen voor de betrokken staten, en dientengevolge kunnen zij naast elkaar worden toegepast Het is derhalve mogelijk dat zowel VWEU-bepalingen als non-discriminatiebepalingen in belastingverdragen op dezelfde situatie van toepassing zijn. In dat geval zijn zowel het verdragsrecht als het EU-recht van toepassing, en het staat de belastingplichtige vrij ofwel één daarvan, ofwel beide te kiezen.

Het is mogelijk om zowel artikel 24 OESO modelverdrag als de VWEU-vrijheden gecombineerd toe te passen. In dat geval kan het gebruik van non-discriminatiebepalingen in belastingverdragen een waardevol alternatief vormen voor het ondervangen van de beperkingen in de (territoriale) reikwijdte van fundamentele vrijheden. Dit geldt binnen de context van groepsbelastingregimes, gezien het feit dat de toepassing van de VWEU-vrijheden wordt beperkt tot de vrijheid van vestiging. De gecombineerde toepassing van de non-discriminatiebepaling uit het belastingverdrag met EU-recht maakt het mogelijk

de grenzen op te zoeken van de VWEU bescherming, en in sommige gevallen, die grenzen over zuiver intracommunautaire situaties heen te tillen.

In deel IV wordt de invloed van de EU op de grensoverschrijdende belastingheffing van groepen in kaart gebracht. De harmonisatie van de vennootschapsbelasting binnen de EU laat nog weinig resultaten zien. Ondanks het gewicht van de huidige Richtlijnen die vennootschapsgroepen raken, is het niet gelukt om de onderliggende problematiek aan te pakken. Bovendien hebben de meest voortvarende voorstellen van de Europese Commissie, eerst op het terrein van de grensoverschrijdende aftrek van verliezen, en meer recentelijk inzake de verplichte gemeenschappelijke geconsolideerde heffingsgrondslag (CCCTB), niet op instemming kunnen rekenen, en het is onwaarschijnlijk dat dit op korte termijn wèl het geval zou zijn.

Als gevolg hiervan heeft het Europese Hof zich verplicht gezien om uitspraak te doen in een groot aantal zaken waarin multinationals nationale groepsregimes als discriminerend hebben aangemerkt. Het HvJ EU is geraadpleegd in zaken van vennootschapsgroepen die een uitspraak wilden in gevallen waarin de EU-wetgever er tot dan toe niet in was geslaagd de problemen om te zetten in wetgeving. Het ontbreken van een dergelijk wettelijk kader heeft harmonisatie en de mogelijkheid om op EU-niveau tot grensoverschrijdende groepsconsolidatie te komen duidelijk negatief beïnvloed. Inmiddels heeft het HvJ EU zijn rol van negatieve harmonisatie voortgezet en onderzoekt het nauwgezet, zich baserend op de uitlegging van de fundamentele vrijheden, of en in hoeverre de bestaande nationale groepsbelastingregimes in overeenstemming zijn met de VWEU.

Zoals het HvJ EU stelselmatig heeft herhaald, vallen de directe belastingen nog steeds binnen de bevoegdheid van de lidstaten. Aangezien harmonisatiemaatregelen op het gebied van directe belastingen schaars blijven, moeten lidstaten ervoor zorgdragen dat hun nationale wetgeving in overeenstemming is met de fundamentele vrijheden die de interne markt beheersen. De beoordeling van de vraag of een bepaalde maatregel in overeenstemming is met EU-recht behoort tot de competenties van het HvJ EU. Niettemin valt de afbakening van de heffingsbevoegdheden van de lidstaten buiten het bereik van het EU-recht. Het staat de lidstaten vrij om hun heffingsrechten te definiëren en te verdelen. Als gevolg daarvan zijn de verdragsvrijheden alleen in het geding indien een lidstaat heeft besloten om over een bepaalde persoon of inkomensbestanddeel heffingsbevoegdheid uit te oefenen, waarbij erop wordt toegezien dat die heffingsbevoegdheid wordt uitgeoefend in overeenstemming met het verdrag.

De beoordeling van de verenigbaarheid van bestaande fiscale eenheidsregimes met EU-recht vindt dus plaats op basis van de fundamentele vrijheden. De jurisprudentie van het HvJ EU inzake de toepassing van de EU fundamentele vrijheden op fiscale eenheidsregimes heeft al een uiteenlopend aantal situaties opgelost: van een antwoord op het ruimere vraagstuk of een binnenlandse fiscale eenheidsregeling moet worden uitgebreid naar grensoverschrijdende situaties, tot verschillende andere situaties waarin de definitie van de omvang van de fiscale eenheid aan de orde was, alsmede de mogelijkheid om bepaalde specifieke voordelen uit te breiden binnen een intracommunautaire context. De uitspraken van het HvJ EU inzake fiscale eenheden – en in het bijzonder inzake de verrekening van verliezen binnen internationale groepen ondernemingen – heeft geleid tot enkele zeer belangrijke uitspraken inzake nationale directe belastingen. Waarschijnlijk is de uitspraak inzake het probleem van verliesverrekening binnen een grensoverschrijdende context in feite het meest significant. Dit ligt voor de hand, want het oordeel van het Europese Hof in *Marks & Spencer* vormt ongetwijfeld één van de belangrijkste uitspraken van het Europese Hof over directe belastingen. Het heeft een precedent geschapen voor vervolguitspraken en is eveneens van belang voor de grondslagen van het Europese recht, aangezien de redenering van het HvJ EU in dat geval aanleiding was voor veel vragen van uiteenlopende aard.

Om te kunnen beoordelen of een bepaalde belastingmaatregel discriminatoir is, maakt het HvJ EU een vergelijkende toets. Voor wat betreft de vergelijkingsnorm wordt het bij lezing van de jurisprudentie echter duidelijk dat er geen homogene benadering in de rechtspraak te vinden is, hetgeen leidt tot onzekerheid over hetgeen een inbreuk op EU-recht vormt. Bij de aanvankelijke behandeling van gevallen inzake directe belastingen oordeelde het Europese Hof dat inwoners en niet-inwoners in het algemeen niet vergelijkbaar waren, maar vergelijkbaar wérden door het feit dat over beide groepen heffingsrechten werden uitgeoefend – vergelijkbaarheid door belastingheffing.

De jurisprudentie heeft zich door de jaren heen zodanig ontwikkeld dat de vergelijkbaarheidstoets voornamelijk plaatsvindt door de doelstelling van de maatregel te toetsen aan de fundamentele vrijheden. In deze benadering beziet het Europese Hof de bedoeling van de nationale wetgever en stelt dan vast of het, in het licht van deze bedoeling, redelijk is om een onderscheid te maken tussen nationale en grensoverschrijdende situaties. Voor deze benadering wordt doorgaans ook gekozen indien het Europese Hof de vergelijkbaarheid van nationale fiscale eenheidsregimes beoordeelt. Maar zelfs hier bestaat enige onzekerheid over de zienswijze van het Europese Hof. In sommige gevallen toetste het Europese Hof de vergelijkbaarheid in het geheel niet, terwijl in andere

gevallen vergelijkbaarheid werd vastgesteld op grond van de bedoeling van de belastingplichtige om voordeel te trekken uit een bepaalde belastingbepaling.

Bezien vanuit het perspectief van fiscale eenheidsregimes hanteert het Europese Hof dezelfde benadering. Om te kunnen vaststellen of in het voorliggende geval sprake is van discriminatie kijkt het HvJ EU voornamelijk (maar niet uitsluitend) naar de doelstelling van de aangevallen rechtsregel.

Om de juiste vergelijkingsfactor te kunnen vinden voert het Europese Hof een verticale vergelijking uit: de fiscale behandeling van zuiver binnenlandse groepen wordt vergeleken met die van grensoverschrijdende groepen. De aanwezigheid van een ongelijke behandeling wordt geconstateerd op het moment dat de voordelen die fiscale eenheidsregelingen bieden wel in binnenlandse, maar niet in grensoverschrijdende situaties worden behaald. In theorie is de benadering van het HvJ EU begrijpelijk omdat deze voortvloeit uit de interne marktgedachte. Er valt echter het nodige op af te dingen waar het gaat om de interactie tussen de te respecteren belastingsoevereiniteit van staten enerzijds en de reikwijdte van de toe te passen fundamentele vrijheden anderzijds. Op het moment dat het Europese Hof van oordeel is dat een lidstaat de bedrijfsresultaten (bijvoorbeeld de verliezen) van een individuele belastingplichtige die inwoner is van een andere lidstaat in aanmerking moet nemen, oefent het daarmee de facto zijn jurisdictie over die belastingplichtige uit.

Een ander belangrijk aspect van vergelijkbaarheid binnen de context van fiscale eenheden is de vraag of het HvJ EU – in bepaalde gevallen – een horizontale vergelijking zou moeten maken, d.w.z. een vergelijking tussen dochterondernemingen en VI's. Het HvJ EU aanvaardt deze vergelijkingsnorm vanuit het perspectief van de staat van ontvangst (hetgeen in feite kan worden teruggevoerd op de vroegere jurisprudentie van het HvJ EU inzake directe belastingen) mar weigert een dergelijke vergelijking te maken vanuit het perspectief van de lidstaat van herkomst. Als reden hiervoor voert het Europese Hof aan dat buitenlandse VI's en dochters van elkaar verschillen waar het de heffingsbevoegdheden van de lidstaat van herkomst betreft. In abstracto is deze redenering geheel juist, maar in dit geval lijkt het HvJ EU voorbij te gaan aan doel en gevolgen van sommige fiscale eenheidsregimes die dochters en VI's op één lijn stellen, hetgeen een dergelijke vergelijking juist mogelijk zou maken.

Maatregelen in de sfeer van de directe belastingen die de uitoefening van de fundamentele vrijheden beperken kunnen worden onderbouwd met dwingende redenen van algemeen belang. In gevallen waarin directe belastingen aan de orde waren zijn de doorgaans aanvaarde rechtvaardigingsgronden de doeltreffendheid

van belastingcontrole, de behoefte om de fiscale samenhang te waarborgen, het territorialiteitsbeginsel, voorkoming van belastingontwijking, een evenwichtige verdeling van heffingsbevoegdheden en de noodzaak om te voorkomen dat verliezen twee maal in aftrek kunnen worden gebracht.

Gedurende de bijna 30 jaar dat uitspraken werden gedaan inzake directe belastingen heeft het gebruik van deze rechtvaardigingsgronden geleid tot talrijke vragen over hun exacte betekenis, reikwijdte en mogelijke overlap van de diverse gronden. Dit blijkt vooral waar het gaat om de belastingheffing naar het groepsinkomen. Het Europese Hof heeft namelijk voor het eerst in de jurisprudentie inzake de belastingheffing naar het groepsinkomen de rechtvaardigingsgrond aanvaard dat een evenwichtige verdeling van heffingsbevoegdheden moest worden gehandhaafd. Een nieuw element van benadering in dit cluster jurisprudentie was ook het feit dat het Europese Hof de aanvaarding van rechtvaardigingsgronden gepaard liet gaan met weinig uitleg, hetgeen vragen deed rijzen met betrekking tot de autonome waarde van elke rechtvaardigingsgrond, alsmede de reikwijdte en toepassing daarvan.

Het territorialiteitsbeginsel wordt door lidstaten doorgaans ingeroepen als rechtvaardigingsgrond voor een inbreuk op de fundamentele vrijheden. Deze rechtvaardigingsgrond wordt door het Hof toegepast in de betekenis die deze heeft in het internationale recht, en is niet gebaseerd op de betekenis daarvan in het belastingrecht met betrekking tot de verdeling van belastingjurisdicties.

De rechtvaardigingsgrond die is gelegen in de noodzaak om de samenhang van het belastingstelsel te waarborgen wordt aanvaard wanneer er een direct verband bestaat tussen een bepaald belastingvoordeel en een compenserende heffing. De aanwezigheid van een dergelijk direct verband kan zich voordoen indien het belastingvoordeel en de heffing dezelfde belastingplichtige raken en hetzelfde belastingmiddel betreffen. Deze rechtvaardigingsgrond vloeit voort uit de bevestiging door het Europese Hof dat een lidstaat een beperkende maatregel mag toepassen indien deze stelselmatig is gekoppeld aan een maatregel die dit beperkende effect neutraliseert. In die zin is de rechtvaardigingsgrond van toepassing in het kader van een nationaal belastingstelsel. Het belang van samenhang als regel die gericht is op het borgen van de interne samenhang van het belastingstelsel wordt duidelijk in de gevallen inzake de belastingheffing van nationale groepen van vennootschappen die gelieerd zijn aan een buitenlandse (bijvoorbeeld groepen nationale vennootschappen die door een buitenlandse moeder of tussenholding worden gehouden). In deze gevallen blijkt duidelijk dat hierbij slechts één jurisdictie betrokken is, in tegenstelling tot andere uitspraken waarin het Europese Hof zich baseerde op de evenwichtige verdeling van heffingsbevoegdheden met betrekking tot de grensoverschrijdende aftrek van

verliezen, met andere woorden winstverschuivingen tussen verschillende lidstaten.

Het Europese Hof heeft in meer gevallen erkend dat de lidstaten in de strijd tegen belastingontwijking in beginsel maatregelen mogen nemen die in andere gevallen als discriminatoir zouden gelden. Het Europese Hof heeft geoordeeld dat deze rechtvaardigingsgrond in beginsel toelaatbaar is, indien de regel voldoende gericht is op de aanpak van uitsluitend volstrekt kunstmatige constructies. Het wezenlijke probleem bij de uitlegging van deze rechtvaardigingsgrond op het terrein van de belastingheffing naar het groepsinkomen is gelegen in het feit dat het Hof deze rechtvaardigingsgrond een bredere betekenis heeft toegekend. Een eerste verklaring hiervoor kan worden gevonden in de kunstmatigheid die inherent is aan fiscale eenheidsregimes. De overdrachten van inkomsten tussen ondernemingen binnen de groep berusten in feite op boekhoudkundige aanpassingen, waaraan geen transacties ten grondslag liggen.
Een tweede verklaring ligt in het feit dat het voorkomen van belastingontwijking binnen deze context in verband is gebracht met de evenwichtige toedeling van heffingsbevoegdheden. Met andere woorden: de bredere betekenis die het Hof aan het bestaan van belastingontwijking heeft gegeven wordt verklaard door het feit dat deze betekenis werd aanvaard op het moment dat de toepassing daarvan werd gekoppeld aan de noodzaak om een verstoring van het evenwicht in de verdeling van heffingsbevoegdheden te voorkomen.

Een andere aanvaarde rechtvaardigingsgrond is het voorkomen van dubbele verliesaftrek. Door de aanvaarding van deze rechtvaardigingsgrond wil het HvJ EU voorkomen dat belastingvoordelen in twee verschillende belastingjurisdicties tegelijk gebruik worden benut.

Het instandhouden van de evenwichtige verdeling van heffingsbevoegdheden tussen lidstaten is één van de meest recentelijk door de HvJ EU erkende rechtvaardigingsgronden; hetgeen niet wegneemt dat daarop het meest een beroep wordt gedaan. Aanvankelijk aanvaardde het Europese Hof deze rechtvaardigingsgrond in combinatie met andere rechtvaardigingsgronden. Het Europese Hof heeft benadrukt dat deze rechtvaardigingsgrond van belang is voor de bevoegdheid van lidstaten om de activiteiten die op hun grondgebied worden uitgeoefend te belasten. Deze rechtvaardigingsgrond is binnen de context van de groepsbelastingheffing met succes ingeroepen waar mogelijk grensoverschrijdende (positieve of negatieve) inkomstenstromen plaatsvonden. In dit opzicht gebruikt het HvJ EU deze rechtvaardigingsgrond om op economische activiteiten van een onderneming uitsluitend de belastingregels van

de betrokken lidstaat van woonplaats te handhaven, zowel op winsten als op verliezen.

Vanaf het moment dat het Europese Hof deze (nieuwe) dwingende reden van openbaar belang heeft aanvaard werd het gecombineerde effect van de gebruikte rechtvaardigingsgronden voorwerp van controverse. Dit laatste heeft namelijk twijfels doen ontstaan over het antwoord op de vraag of en zo ja, welke rechtvaardigingsgronden kunnen dienen als autonome rechtvaardigingsgrond voor een beperkende maatregel en wat de exacte reikwijdte daarvan zou zijn. Ook hier is de jurisprudentie inzake de belastingheffing naar het groepsinkomen cruciaal, gezien het drievoudig gebruik van rechtvaardigingsgronden dat voor het eerst werd toegepast bij de beoordeling van de verenigbaarheid van een fiscale eenheidsregime met de fundamentele vrijheden. Daarnaast rezen er twijfels aangaande de precieze omvang van de bovengenoemde rechtvaardigheidsgronden en hun onderlinge verschillen.

Hoewel er een verband bestaat tussen de rechtvaardigingsgronden die zijn gebaseerd op het territorialiteitsbeginsel, de samenhang van het belastingstelsel en de evenwichtige verdeling van heffingsbevoegdheden, hebben zij niet exact dezelfde betekenis. De rechtvaardigingsgrond die berust op de evenwichtige verdeling van heffingsbevoegdheden vult de andere rechtvaardigingsgronden aan, omdat deze in het bijzonder ziet op de situaties die voortvloeien uit de mogelijke interactie tussen twee belastingstelsels van twee verschillende lidstaten.

Voor wat betreft het enkele voorkómen van misbruik door middel van het brede criterium dat het Europese Hof hanteert lijkt dit te zijn bedoeld om de evenwichtige verdeling van heffingsbevoegdheden te handhaven. Het voorkómen van belastingontwijking vormt derhalve een verschijningsvorm of subcategorie van de rechtvaardigingsgrond van de evenwichtige verdeling van heffingsbevoegdheden tussen lidstaten, in de zin dat hiermee wordt aangeduid dat het risico aanwezig is dat die evenwichtige verdeling van heffingsbevoegdheden wordt verstoord.

De dubbele aftrek van verliezen vormt ook een subcategorie of verschijningsvorm van de evenwichtige verdeling van heffingsbevoegdheden, en is een autonome rechtvaardigingsgrond. De jurisprudentie van het HvJ EU toont aan dat de dubbele aftrek van verliezen alleen als rechtvaardigingsgrond wordt aanvaard indien verliezen worden overgedragen van de ene belastingjurisdictie naar de andere, waardoor de evenwichtige verdeling van heffingsbevoegdheden tussen de lidstaten in het geding is. Ook hier bleek dit uit de jurisprudentie van het HvJ EU inzake de definitie van nationale groepsvennootschappen met

banden met het buitenland waar het HvJ EU de secundaire rol van de dubbele aftrek van verliezen heeft bevestigd.

De laatste fase van de 'rule of reason' is gelegen in het onderzoek naar proportionaliteit, hetgeen inhoudt dat de beperkingen van het vrije verkeer ten opzichte van de aanvaarde dwingende redenen van openbaar belang zodanig tegen elkaar worden afgewogen, dat de toepassing van de laatste de eerste niet méér schaadt dan noodzakelijk is.

Op het terrein van fiscale eenheidsregimes is de proportionaliteitstoets inherent aan de grensoverschrijdende aftrek van verliezen en de 'no-possibilities'-toets. In *Marks & Spencer* oordeelde het HvJ EU dat een lidstaat verplicht is om buitenlandse verliezen te importeren als die verliezen niet meer lokaal kunnen worden verrekend. Deze uitspraak in het kader van een groepsaftrekregeling stelt zowel nationale rechters als overheden voor de taak de precieze betekenis van definitief onverrekenbare verliezen vast te stellen, hoe deze te berekenen, en de omstandigheden te duiden die het definitief onverrekenbare karakter van verliezen bepalen. Bovendien leidde de uitspraak ook tot een groot aantal vragen met betrekking tot de motieven die het HvJ EU kon hebben gehad om deze redenering te volgen, of de redenering van toepassing is op andere fiscale eenheidsregimes, en of er grenzen kunnen worden gesteld aan de entiteiten die grensoverschrijdende verliezen kunnen verrekenen.

Een eerste frappant aspect van de jurisprudentie van het HvJ EU was echter het feit dat het Hof geen rekening hield met liquiditeitsnadelen. Eén van de belangrijkste redenen voor een besluit om een fiscale eenheid te vormen is de mogelijkheid om verliezen rechtstreeks met winsten te verrekenen. In dit opzicht is het liquiditeitsvoordeel dat uit deze mogelijkheid voortvloeit fundamenteel voor de keus voor een fiscale eenheid. Er valt veel af te dingen op het feit dat het HvJ EU geen rekening hield met het belang van liquiditeitsvoordelen – in het bijzonder als men in aanmerking neemt dat de hiermee verband houdende nadelen al verscheidene malen waren aangemerkt als inbreuken op de vrijheden – en oordeelde dat alleen definitief onverrekenbare verliezen in aanmerking komen voor grensoverschrijdende verliesverrekening.

Het invoeren van een systeem van aftrek en inhaal van verliezen zou duidelijk meer in overeenstemming zijn met de doelstelling van fiscale eenheden. Dit systeem zou rekening kunnen houden met de rechtvaardigingsgronden die het HvJ EU heeft aanvaard en zou meer in lijn zijn met de proportionaliteitstest. Zodra het Europese Hof, de doelstelling van fiscale eenheidsregimes in aanmerking nemend, een beperking van de vrijheid van vestiging aanwezig achtte had het de voorkeur moeten geven aan een systeem van aftrek en inhaal

van verliezen, in plaats van te kiezen voor een oplossing die is gebaseerd op het definitief onverrekenbare karakter van verliezen.

Deze oplossing zou niet alleen meer in overeenstemming zijn met de fundamentele vrijheden, zij zou ook allerlei uitleggingsvraagstukken wegnemen waar het gaat om het vaststellen van de betekenis van definitief onverrekenbare verliezen. De beweegreden die aan deze oplossing ten grondslag ligt kan worden gevonden in de jurisprudentie op het terrein van de individuele inkomstenbelasting en de *Schumacker*-doctrine: de mogelijkheid om verliezen éénmaal in aanmerking te nemen. Deze doorgaans 'altijd ergens' genoemde benadering is echter niet absoluut: zij wordt beperkt tot een *ab initio* mogelijkheid om verliezen te verrekenen waar zij zijn ontstaan. Alleen als die mogelijkheid niet langer bestaat– maar op enig moment heeft bestaan – is de andere lidstaat verplicht de buitenlandse verliezen in aanmerking te nemen.

Bezien vanuit het gezichtspunt van de lidstaat die de buitenlandse verliezen importeert is het oordeel van het Europese Hof gebaseerd op de aanwezigheid van een ongelijke behandeling. Als gevolg daarvan is een lidstaat alleen verplicht om buitenlandse verliezen in aanmerking te nemen indien diezelfde verliezen in een zuiver binnenlandse situatie ook in aanmerking zouden worden genomen.

Ten aanzien van de omstandigheden die tot definitief onverrekenbare verliezen leiden is aangevoerd dat daarvan sprake is als zowel de juridische als de feitelijke mogelijkheden zijn uitgeput. Deze oplossing past niet alleen beter in de formulering van het HvJ EU na de *Marks & Spencer* uitspraak, zij voorkomt ook dat belastingontwijking ontstaat doordat buitenlandse verliezen in aanmerking worden genomen ingeval enkel de feitelijke mogelijkheden zijn uitgeput.

Het Europese Hof lijkt te kiezen voor een alles of niets benadering waar het gaat om definitief onverrekenbare verliezen. Zelfs wanneer duidelijk is dat niet alleen buitenlandse verliezen kunnen worden verrekend in de lidstaat waar zij werden geleden, zijn lidstaten niet verplicht de onverrekende buitenlandse verliezen die zijn gebaseerd op een pro-rata benadering te importeren, zo lang als zelfs een zeer klein deel van die verliezen zal worden verrekend in de staat waar deze zijn ontstaan. Aangevoerd is dat deze benadering van het Europese Hof onjuist is, omdat deze niet overeenstemt met het beginsel van proportionaliteit.

Een ander belangrijk punt is de samenloop van binnenlandse en buitenlandse (onverrekenbare) verliezen. In dit geval is aangevoerd dat er in beginsel geen voorkeur bestaat voor het verrekenen van het ene of het andere verlies.

Voor de berekening van in het buitenland geleden verliezen geldt dat deze in beginsel moeten worden herberekend naar de regels van de lidstaat die deze verliezen importeert. Deze regel is echter onderworpen aan het laagste-bedrag-criterium: (i) het bedrag vastgesteld door de staat waarin zij oorspronkelijk zijn geleden, indien dit lager is dan de herberekening door de staat waar de grensoverschrijdende verliesaftrek wordt gevraagd; of (ii) het bedrag herberekend volgens de regels van de lidstaat die de verliezen importeert, indien dit lager is dan het bedrag volgens de regels van de staat waar zij oorspronkelijk zijn geleden.

Bovendien is ook aangevoerd dat de proportionaliteitstoets en in het bijzonder het definitief onverrekenbare karakter van verliezen als bepaald door het Europese Hof binnen de context van een groepsaftrekregeling in gelijke mate van toepassing is binnen de context van andere fiscale eenheidsregimes in de verschillende EU-lidstaten.

Tot slot blijkt uit de jurisprudentie van het Europese Hof eveneens dat er grenzen worden gesteld als het gaat om welke entiteit binnen een grensoverschrijdende fiscale eenheid recht heeft op groepsaftrek. Voorgesteld wordt daarom dat niet alleen aftrek van verticale upstream verliezen, maar ook aftrek van horizontale en downstream verliezen tot de mogelijkheden behoren, indien de voorwaarden van de proportionaliteitstoets zijn vervuld.

De jurisprudentie van het Europese Hof biedt steun voor het gezichtspunt dat belastingplichtigen, indien zij in grensoverschrijdende situaties bepaalde voordelen willen verkrijgen die anders alleen beschikbaar zouden zijn voor een binnenlandse fiscale eenheid, een beroep kunnen doen op de vrijheden van het EU-werkingsverdrag,. Als gevolg hiervan is het voor een belastingplichtige in beginsel mogelijk om een beroep te doen op bepaalde voordelen – de per element benadering - van fiscale eenheidsregimes, zonder de noodzaak toe te treden tot een grensoverschrijdende fiscale eenheid. Aard en kenmerken van het betreffende fiscale eenheidsregime laten deze conclusie onverlet, evenals de kans dat oneigenlijk gebruik ontstaat in verband met de mogelijkheid om voor specifieke voordelen van een fiscale eenheid te opteren. Op grond hiervan zal elke belastingplichtige in een grensoverschrijdende situatie zich op bepaalde voordelen van een fiscale eenheidsregime kunnen beroepen. Dit brengt mee dat elk voordeel afzonderlijk moet worden getoetst aan de VWEU-vrijheden. Bij ontstentenis van jurisprudentie op dit specifieke terrein is deze evaluatie gebaseerd op de analoge toepassing van eerdere jurisprudentie.

Tot slot is het denkbaar dat er meer situaties kunnen worden aangevochten waarin sprake is van nationale wetgeving inzake fiscale eenheden, maar die

vinden hun grond in de ongelijke behandeling van binnenlandse en grensoverschrijdende scenario's.

Een zeer beperkt aantal lidstaten kent regelgeving voor binnenlandse én grensoverschrijdende fiscale eenheidsregimes. Gewoonlijk bestaan binnenlandse en grensoverschrijdende regimes naast elkaar. Hieraan ligt ten grondslag dat die lidstaten, hoewel zij tot op zekere hoogte de integratie van fiscale eenheden op grensoverschrijdende basis regelen, in grensoverschrijdende situaties nog steeds niet dezelfde voordelen bieden als in zuiver binnenlandse situaties.

Het bestaan van dergelijke verschillen in behandeling leidt ertoe dat ook moet worden beoordeeld in hoeverre deze verenigbaar zijn met de fundamentele vrijheden. Gezien de benadering van het HvJ EU leveren deze verschillen hoogstwaarschijnlijk a *prima facie* een beperking van de vrijheid van vestiging op. Hoewel sommige daarvan redelijkerwijs kunnen worden gebaseerd op de meest voorkomende rechtvaardigingsgronden die door het HvJ EU binnen de context van grensoverschrijdende belastingheffing naar het groepsinkomen zijn aanvaard (nl. een belemmering van de evenwichtige verdeling van heffingsbevoegdheden of het risico van belastingmisbruik), kunnen andere verschillen in behandeling de facto worden aangemerkt als een inbreuk op de vrijheid van vestiging.

Bibliography

Adamczyk, Lukasz "Country Reports: Poland" in, G. Maisto (ed.) *International and EC Tax Aspects of Groups of Companies* - EC and International Tax Law Series, Vol. 4, IBFD (2008), pp. 423-444

Adoninno, Pietro IFA General Report "Non-discrimination in International Tax Law", *Cahiers du Droit Fiscal International*, Vol. 78b, (1993), pp. 19-71

Airs, Graham "Oy AA - limitations on transfers of profits to domestic situations not precluded by the EC Treaty" *British Tax Review* 5 (2007), pp. 597-604

Almendral, Violeta Ruiz "Tax Avoidance, the "Balanced Allocation of Taxing Powers" and the Arm's Lenght Standard; an odd Threesome in Need of Clarification" in Isabelle Richelle et al (eds) *Allocating Taxing Powers within the European Union*, MPI Studies in Tax Law and Public Finance 2 (Springer) 2012, pp.131-170

American Law Institute, *Federal Income Tax Project: United States Income Tax Treaties* (1992)

Amparo Ruiz, María Garcia, IFA Spain Report, "Group Taxation", *Cahiers de droit fiscal international*, Vol. 89b, (2004), pp. 609-629

Andersson, Edward, IFA Report Finland "Non-discrimination rules in international taxation", *Cahiers de droit fiscal international* Vol. 78b (1993), pp. 407-416

Antunes, José Engrácia "The Liability of Polycorporate Enterprises", *Connecticut Journal of International Law* 10 (1999), pp. 197-231

Antunes, José Engrácia *Liability of Corporate Groups: autonomy and control in parent-subsidiary relationships in US, German and EU law: an international and comparative perspective* (1994)

Arnold, Brian J. "Tax Treaty Case Law News", *Bulletin for International Taxation* 1 IBFD (2015), pp. 53-57

Arnold, Brian J. "Tax Treaty News", *Bulletin for International Taxation* 7 IBFD (2011), pp. 367-374

Arnold, Brian J. "Tax Treaty Monitor", *Bulletin for International Taxation* 7, IBFD (2009), pp. 266-271

Arnold, Brian *Tax Discrimination Against Aliens, Non-Residents and Foreign Activities: Canada, Australia, New Zealand, the United Kingdom, and the US*, Canadian Tax Paper no. 90, Canadian Tax Foundation (1991)

Arnold, Brian J. "The Taxation of Controlled Foreign Corporations: An International Comparison", *Canadian Tax Paper* 78 (1986),

Arnull Anthony et al. *Wyatt & Dashwood's European Union Law*, 5th Edition (2009) Thomson/Sweet & Maxwell

Ault, Hugh and Sasseville, Jacques "Non-Discrimination: A Reconsideration", 2 *World Tax Journal* IBFD (2011), pp. 101-125

Ault Hugh & Arnold Brian, *Comparative Income Taxation: A Structural Analysis,* 2nd edition (The Hague: Kluwer Law International), 2004

Avelas Nunes, Goncalo, *Tributacao dos Grupos de Sociedaes pelo Lucro Consolidado em sede de IRC – Contributo para um novo enquadramento dogmático e legal do seu regime*, Almedina (2000)

Avella, Francisco "Dual Residence, Group taxation and Tax Treaty Law," in Matthias Hoffstatter and Patrick Plansky (eds.), *Dual Residence in Tax Treaty Law and EC Law*, Series on International Tax Law Univ.-Prof. Dr. Michael Lang (editor), Volume 60, Linde Verlag 2009, pp. 293-318

Avery Jones, John F., et al., "Art. 24 (5) of the OECD Model in Relation to Intra-Group Transfers of Assets and Profits and Losses", *World Tax Journal* June, IBFD (2011), pp. 179-225

Avery Jones, John F. "The United Kindgom's influence on the OECD Model Tax Convention", *British Tax Review* 6, (2011), pp. 653-683

Avery Jones, John F. "Understanding the OECD Model Tax Convention: The Lesson of History", 10 *Florida Tax Review* 1 (2009), pp. 1-49

Avery Jones, John F. "2008 OECD Model: Place of Effective Management – What One Can Learn form the History", *Bulletin for International Taxation* 5/6 IBFD (2009), pp. 183-186

Avery, Jones John & Bobbet, Catherine, "Interpretation of the Non-Discrimination Article of the OECD Model", *Bulletin for International Taxation* 2, IBFD (2008), pp. 50-55

Avey Jones, John F. "The non-discrimination article is about discrimination – official" *British Tax Review* 4 (2007)

Avery Jones, John F. "Place of Effective Management as a Residence Tie-Breaker", *Bulletin for International Fiscal Documentation* 1 IBFD (2005), pp. 20-32

Avery Jones, John, "The David R. Tillinghast Lecture: Are Tax Treaties Necessary?", 53 *Tax Law Review* (1999-2000), pp. 1-38

Avery, Jones John & Bobett, Catherine, "Triangular Treaty Problems: A Summary of the Discussion in Seminar E at the IFA Congress in London, 53 *Bulletin for International Fiscal Documentation* 1 IBFD (1999), pp. 16-20

Avery Jones, John "Article 3(2) of the OECD Model Convention and the Commentary to it: Treaty Interpretation", 33 *European Taxation* 8 (1993), pp. 252-257

Avery Jones, John F. IFA Report UK "Interpretation of Double Tax Conventions", *Cahiers de Droit Fiscal International* Vol. 78a, (1993), pp. 597-614

Avery Jones, John F. "Non-discrimination: Commerzbank – round two", *British Tax Review* 10 (1991), pp. 405-407

Avery Jones, John et al, "The Non-discrimination Article in Tax Treaties", *European Taxation* 10 IBFD (1991), pp. 310-347

Avi-Yonah, Reuven S., "Between Formulary Apportionment and the OECD Guidelines: A Proposal For Reconciliation", *World Tax Journal* 2 IBFD (2010), pp. 9-20

Reuven Avi-Yonah and Kimberly A. Clausing, "Business Income (Article 7 OECD MC)", in M. Lang et al (eds.), *Source versus Residence: Problems Arising from the Allocation of Taxing Rights in Tax Treaty Law and Possible Alternatives*, EUCOTAX Series on European Taxation no. 20, Alphen aan den Rijn, The Netherlands: Kluwer Law International, (2008), pp. 9-20

Avi-Yonah, Reuven, "The Three Goals of Taxation", 60 *Tax Law Review*, (2006/2007), pp. 1-28.

Avi-Yonah, Reuven S. "National Regulation of Multinational Enterprises: An Essay on Comity, Extraterritoriality and Harmonization", 42 *Columbia Journal of Transnational Law* 5 (2003), pp. 5-34

Avi-Yonah, Reuven S., "The Rise and Fall of Arm's Length: A Study in The Evolution of U.S. International Taxation", *Virginia Tax Review* 15 (1995), pp. 89-159

Backer, Larry Catá, "The Autonomous Global Corporation: On the Role of Organization Law Beyond the Asset Portioning and Legal Personality", *Tulsa Law Review* 41 (2006), pp. 541-552

Baker, Philip, *Double Taxation Conventions*, Sweet & Maxwell (3rd edition)

Baker, Philip, "Transfer Pricing and Community Law: The SGI case", 38 *Intertax* 4 (2010) Kluwer Law International BV, pp. 194-196

Baker Philip, and Collier, Richard S., "Attribution of Profits to Permanent Establishments", IFA General Report 2006 (long version, CD-ROM), pp. 1-101

Baker, Philip "Protection of the Taxpayer by the European Court of Justice", 44 *European Taxation* 10, IBFD (2004), pp. 453-455

Baker, Philip "Review of Recent Treaty Cases – NatWest II, NEC and SA Andritz, *Bulletin-Tax Treaty Monitor* 5 IBFD (2004), pp. 205-212

Bammens, Niels "Article 24 (4) and 24 (5) of the OECD Model Applied to Domestic Thin Capitalization Rules", *World Tax Journal* 6 (2013), pp. 148-171

Bammens, Niels "The Interaction between the Interpretation of Article 24 OECD MC and the Non-discrimination Standard Developed by the CJEU", *EC Tax Review* 2013/4, Kluwer Law International BV, pp. 172-186

Bammens, Niels *The Principle of Non-Discrimination in International and European Tax Law,* IBFD Doctoral Series no. 24 (2012)

Bardini, Chiara "The Ability to Pay in the European Market: An Impossible Sudoku for the ECJ", 38 *Intertax* 1 (2010) Kluwer Law International BV, the Netherlands, pp. 2-20

Bender, T. & Engelen, F.A., "Hinken op twee gedachten in een driehoekssituatie", *Weekblad voor Fiscaal Recht* 2002/1461

Bendotti, Fabrizio "Country Report Italy", in G. Maisto (ed.) *International and EC Tax Aspects of Groups of Companies*, EC and International Tax Law Series, Vol. 4, IBFD (2008), pp. 327-362

Bennett, Mary "Article 7 – New OECD rules for attributing profits to Permanent Establishments", in Dennis Weber and Stef van Weeghel, *The 2010 OECD updates: Model Tax Convention & TP Guidelines*, Series on International Taxation, Kluwer Law International, (2011) pp. 21-36

Bennett, Mary and Russo, Raffaele "Discussion Draft on a New Article 7 of the OECD Model Convention, *International Transfer Pricing Journal*, 3/4, IBFD (2009), pp. 73-80

Bennet, Mary C., "Nondiscrimination in International Tax Law: a concept in search of a principle", 59 *Tax Law Review* 4, New York (2006) pp. 439-485

Benett, Mary C. and Dunahoo, Carol A., "*The NFCT Tax Treaty Project: Towards a U.S. Tax Treaty Policy for the Future: Issues and Recommendations"*, (2004), available at http://www.nftc.org/default/Tax%20Policy/05_26_05_NFTC%20_Tax_Treaty_Project_Part_1.pdf

Bengtsson, Jorgen, IFA Report Sweden "Non-discrimination rules in international taxation", *Cahiers de droit fiscal international* Vol. LXXVIIIb, Deventer Kluwer (1993), pp. 659-663

Betjens, René, IFA Report Luxembourg, "Group Taxation", *Cahiers de droit fiscal international*, Vol. 89b, (2004), pp. 427-440

Bittker, Boris I. "Equity, Efficiency, and Income Tax Theory: Do Misallocations Drive out Inequities?" 16 *San Diego Law Review*, (1979), pp. 735-748

Bjornholm, N. & Hansen, A. Oreby, *Denmark in International Tax Planning*, Online Books (IBFD 2011)

Blokland, G.M.R. an van den Hornet, M.J.A., "X Holding vandaad de dag: kan de wetgever nu daadwerkelijk rustig ademhalen?" *Weekblad voor Fiscaal Recht* 2011/782, pp. 792-790

Blumberg, Phillip I., “The Transformation of Modern Corporation Law: The Law of Corporate Groups”, 3 *Connecticut Law Review* 37 (2005), pp. 605-617

Blumberg, Phillip I., “The Increasing Recognition of Enterprise Principles in Determining Parent and Subsidiary Corporation Liabilities”, *Connecticut Law Review* 28 (1995), pp. 295-346

Blumberg, Philip I., *The Multinational Challenge to Corporation Law: The Search for a New Corporate Personality* (1993)

Blumberg, Phillip I., “The Corporate Entity in an Era of Multinational Corporations”, 15 *Delaware Journal of Corporate Law* 2 (1990), pp. 283-330

Blumberg, Phillip I., “Limited Liability and Corporate Groups”, 11 *Journal of Corporation Law* (1986), pp. 611-623

Borrat, José André and Bassiére, Alain, IFA Report France, “Group Taxation”, *Cahiers de droit fiscal international*, Vol. 89b, (2004), pp. 271-288

Boulogne, Frederik and Slavnic, Nana Sumrada, “Cross-Border Restructuring and “Final Losses”, European Taxation 10 IBFD (2012), pp. 486-495

Boulogne, G.F., "Group Taxation within the European Union: Did Papillon and Art. 24 (5) of the OECD Model Tax Convention Create a Butterfly Effect?", *European Taxation* 5, IBFD (2011), pp. 171-178

Brauner, Yariv, Dourado, Ana Paula & Traversa, Edoardo “Ten Years of Marks & Spencer”, 43 Intertax 4, *Kluwer Law International BV* (2015), pp. 306-314

Brauner, Yariv, “Policy Forum: Taxation of Corporate Groups – Lessons from the United States, 59 *Canadian tax Journal* 2 (2011), pp. 295-313

Bricet, A.et al., French Group Consolidation Regimes Violates EC Treaty, ECJ Rules, *Tax Notes International* (15 December 2008), pp. 848-850

Brodic, Dunja “Swedish Advance Rulings: Group Contribution Regime Contrary to EC Law, *European Taxation* 3 IBFD (2007), pp. 153-155

Broklind, Cecile “Gambro AB, the Swedish Supreme Administrative Court Applies ECJ’s Case Law on Cross Border Group Taxation in 10 Decision on the Swedish Group Contribution Regime”, *Highlights & Insights on European Taxation* 2009/5.7

Brugger, Florian, "Country Report Austria", in G. Maisto (ed.) *International and EC Tax Aspects of Groups of Companies*, EC and International Tax Law Series, Vol. 4, IBFD (2008), pp. 175-208

Bruns, Silke "Taxation and Non-Discrimination: Clarification and Reconsideration by the OECD", *European Taxation* 9, IBFD 2008, pp. 484-492

Burgers, Irene J.J., *Analysis of art. 7 of the OECD Model Convention: Allocation of Profits to a Permanent Establishment*, IBFD loose-leaf (2011)

Burgers, Irene J.J. "The New OECD Approach on Profit Allocation: A Step Forward Towards Neutral Treatment of Permanent Establishments and Subsidiaries", 10 *Florida Tax Review* 1 (2009), pp. 51-76.

Burgers, Irene J.J. "Some Thoughts on Further Refinement of the Concept of Place of Effective Management for Tax Treaty Purposes", 35 *Intertax* 6/7 (2007), pp. 378-386

Burgers, Irene J.J. "Triangular Case: Japanse bronbelasting op aan Zwitserse vaste inrichting toe te rekenen royalty's is niet in Nederland verrekenbaar", *BNB* 2002/184

Calderón Carrero, Jose Manuel "Las Pérdidas Transfronteirizas de Los Grupos de Sociedades y La Jurisprudencia del Tribunal de Justicia de La Unión Europea: Reflexiones Al Hilo de la STJUE X Holding BV", in Paulo Otero, Fernando Araújo e João Taborda da Gama, *Estudos em Memória do Prof. Doutor J.L. Saldanha Sanches, Vol. V* (2011), pp. 579-621

Câmara, Francisco Sousa da "How will the Marks & Spencer Ruling Affect Portugal?", *Tax Notes International* (15 May 2006), pp. 619–620

Câmara, Francisco de Sousa da "A Dupla Residencia das Sociedades a Luz das Convencoes de Dupla Tributacao", in *Planeamento e Concorrencia Fiscal Internacional*, Fisco/Associacao Portuguesa de Consultores Fiscais (2003), pp. 213-261

CFE ECJ Task Force, "Opinion Statement ECJ-TF 4/2014 of the CFE on the decision of the European Court of Justice in *SCA Group Holding BV et al*. (Joined Cases C-39/13, C-40/13 and C-41/13), on the requirements to form a "fiscal unity", *European Taxation* 2/3 IBFD (2015), pp. 116-121

CFE ECJ Task Force, "Opinion Statement of the CFE on the Decision of the European Court of Justice of 6 September 2012 in Philips Electronics (Case C-18/11) and Group Relief", 53 *European Taxation* 7 IBFD (2013), pp. 341-343

Chalmers D., et al., *European Union Law, Text and Materials*, Cambridge University Press (2009)

Cleave, Brian "FCE Bank plc v HMRC: applying Boake Allen to group relief", *British Tax Review* 2 (2013), pp. 126-131

Consultation Paper of the Department of Finance of Canada *The Taxation of Corporate Groups* (November 2010), available at: http://www.fin.gc.ca/activty/consult/tcc-igs-eng.pdf

Cooper, Graeme S., "Policy Forum: A Few Observations on Managing the Taxation of Corporate Groups – The Australian Experience", 59 *Canadian Tax Journal* 2, pp. 265-294

Corben, H. "Commentary on ICI v Colmer case", 3 *EC Tax Journal* 1 (1998), pp. 29-34

Cordewener, A. Cross-border Compensation of 'Final Losses' for Tax Purposes – The Drama Continues…", 22 *Maastricht Journal of European and Comparative Law* 3 (2015), pp. 471-431.

Cordewener A. et al., "The Clash between European Freedoms and National Direct Tax Law: Public Interest Defences available to the Member States", 46 *Common Market Law Review* (2009), pp. 1951-2000

Cordewener, Axel "EC law protection against "horizontal" tax discrimination on the rise – or how to play snooker in an Internal Market", 16 *EC Tax Review* 5 Kluwer Law International BV (2007), pp. 210-212.

Cordewener, A., Kofler, G., and Schindler, C. "Free Movement of Capital, Third Country Relationships and National Tax Law: An Emerging Issue before the ECJ", 47 *European Taxation* 3 IBFD (2007), pp. 107-119.

Cordewener A. et al., "The Tax Treatment of Foreign Losses: Ritter, M&S and the way ahead" (Part I), 44 *European Taxation* 4, IBFD (2004), pp. 135-142.

Cordewener A. et al. "The Tax Treatment of Foreign Losses: Ritter, M&S and the way ahead" (Part II), 44 *European Taxation* 5, IBFD (2004), pp. 218-233.

Cordewener A. and Doerr, I. "Casenote on Marks & Spencer" 43 *Common Market Law Review*, pp. 855-884

Cordewener, A. "Foreign Losses, Tax Treaties and EC Fundamental Freedoms: A New German Case before the ECJ", 43 *European Taxation* 9, IBFD (2003), pp. 294-303

Cordewener, A., *Europaische Grundfreheiten und nationales Steurrecht: "Konvergenez" des Gemeinschaftsrechts und Koharenz in der direkten Steuern in der Rechtsprechung des EuGH*, Verlag Dr Otto Schmidt, Band 29, Koln, (2002)

Correia, Miguel, *Taxation of Corporate Groups*, Wolters Kluwer (2013)

Correia, Miguel, "Taxation, Property and Market: The Case of the Corporation Income Tax", Católica Global School of Law, *Working Paper Series*, 19 January 2011

Couzin, Robert, *Corporate Residence and International Taxation*, IBFD (2002)

Craig and De Búrca, *EU Law, Text, Cases and Materials*, Oxford University Press, 4th Edition (2008)

Cunningham, Noël B. & Schenk, Deborah H., "The Case for a Capital Gains Preference", 48 *Tax Law Review*, (1993), pp. 319-380

Dangan, Tsilly, "National Interests in the International Tax Game", *Virginia Tax Review* 18 (1998), pp. 364-416

Dahlberg, Matthias "Sweden: Lawmakers Considering Cross-Border Group Contributions", *Tax Notes International*, 3 May 2010, pp. 383-385

Danon Robert J., "Cross-border Transfers of Participations within a Group: a Note on a Recent Judgement Rendered by the Swiss Supreme Court, 32 *Intertax* 6/7 Kluwer Law International (2004), pp. 336-339

da Silva, Bruno "Felixstowe Dock and Railway Company Ltd. & Ors v Revenue & Customs: UK group relief: Non Discrimination in Tax Treaties and EU Law", *Highlights & Insights on European Taxation* 2013/2.1

da Silva, Bruno, "Tributação discriminatória de dividendos distribuídos por sociedades Portuguesas a acionistas residentes em Estados-Membros da UE: o

caso Amorim Energia," in *Anuario do Ministerio dos Negocios Estrangeiros 2012: Jurisprudência anotada dos tribunais da União Europeia*

da Silva, Bruno "Non-Discrimination in Tax Treaties v EU Law: Recent Trends and Issues for the Years Ahead", in D. Weber (ed.) *EU Income Tax Law: Issues for the Years Ahead*, EC and International Tax Law Series Vol. 9 IBFD (2013), pp. 271-350

da Silva, Bruno "From Marks & Spencer to X Holding: A (Critical) Overview and Some Open Issues", in Dennis Weber & Bruno da Silva (eds.), *From Marks & Spencer to X Holding: The Future of Cross-Border Group Taxation*, Kluwer Law International BV, The Netherlands (2011), pp. 1-23

de Broe, Luc "The ECJ's judgment in Argenta: Narrow Interpretation of 'The Preservation of the Balanced Allocation of Taxing Rights between Member States'. A Headache for Designers of Tax Incentives in the Union.", *EC Tax Review* 5 Kluwer Law International BV (2013), pp. 210-212

de Broe, Luc and Neyt, Robert, "Tax Treatment of Cross-Border Pensions under the OECD Model and EU Law", *Bulletin for International Taxation* 3 IBFD (2009), pp. 86-93

de Broe, Luc, *International Tax Planning and Prevention of Abuse: A Study under Domestic Tax Law, Tax Treaties and EC Law in Relation to Conduit and Base Companies*, IBFD Doctoral Series Vol. 14 (2008)

de Broe, Luc, et al, "Interpretation of Article 15(2)(b) of the OECD Model Convention: "Remuneration Paid by, or on Behalf of, an Employer Who is not a Resident of the Other State" Bulletin – Tax Treaty Monitor, 10 (2000), IBFD, pp. 503-521

de Graaf, Arnaud and Pötgens, Frank "Worrying Interpretation of "Liable to Tax": OECD Clarification Would Be Welcome", 39 I*ntertax* 4, pp. 169-177

de Hosson, Fred C. and Michielse, Geerten M.M. "Treaty Aspects of the 'thin capitalisation' issue – A review of the OECD Report", *Intertax* 11 (1989), pp. 476-484

de L'Hotellerie-Fallois, Domingo J. Jiménez-Valladolid, *Reorganization Clauses in Tax Treaties*, IBFD (2014)

de Wilde, Maarten "'Sharing the Pie': Taxing Multinationals in a Global Market", 43 *Intertax*, 6/7, Kluwer Law International (2015), pp. 438-446.

de Wilde, Marteen Floris, *Sharing the Pie – Taxing multinationals in a global Market*, Proefschrift Erasmus Universiteit Rotterdam (2015)

de Wilde, Maarten F. "A Step Towards a Fair Corporate Taxation of Groups in the Emerging Global Market", 39 *Intertax* 2 (2011), pp. 62-84

de Wilde, Maarten F. "On X Holding and the ECJ's Ambiguous Approach towards the Proportionality Test", *EC Tax Review* 4 (2010), pp. 170-182

de Vries, Rudolf J. IFA Netherlands Report, IFA Netherlands Report "Group Taxation", *Cahiers de droit fiscal international*, Vol. 89b, (2004), pp. 461-484

der Vegt, Pieter van "Country Reports: Netherlands" in, G. Maisto (ed.) *International and EC Tax Aspects of Groups of Companies* - EC and International Tax Law Series, Vol. 4, IBFD (2008), pp. 363-422

Delauriere, J. "The Papillon Decision: Upcoming French Group Reform", *Tax Notes International* (9 March 2009) pp. 903-906

Desai, Mihir A. & Hines, James R., "Old Rules and New Realities: Corporate Tax Policy in a Global Setting, 4 *National Tax Journal* 56 (2004), pp. 937-960

Desai, Mihir A. "New Foundations for Taxing Multinational Corporations", *Taxes* (March 2004), pp. 41-49

Doernberg, Richard L., "Overriding Tax Treaties: The U.S. Perspective", 9 *Emory Int'l Law Review*, (1995) pp. 71-114

Doerr, Ingmar, "A Step Forward in the Field of European Corporate Taxation and Cross-Border Loss Relief: Some Comments on the Marks & Spencer case", 32 *Intertax* 4 (2005), pp. 180-186

Donnelly Maureen, & W. Young, Allister, "Group Relief for Canadian Corporate Taxpayers – At Last?", 59 *Canadian Tax Journal* 2 (2011), pp. 239-263

Douma, Sjoerd, *Optimization of Tax Sovereignty and Free Movement*, IBFD Doctoral Series, No. 21 (2011)

Douma, Sjoerd, "Papillon: group consolidation should be available for indirectly owned subsidiary", *Highlights & Insights in European Taxation*, Kluwer Law International (2009/2.1), pp. 44-54

Douma, Sjoerd, “Sinterklaasbrief: fiscal-eenheidvoordelen zonder fiscal eenheid!”, *NTFR* 2009/2599

Douma, Sjoerd, “Valutaverlies op deelneming: aftrekbaar!”, *NTFR* 2008/2327

Douma, Sjoerd, “The Three Ds of Direct Tax Jurisdiction: Disparity, Discrimination and Double Taxation”, 46 *European Taxation* 11, IBFD (2006), pp. 522-533

Douma Sjoerd and Naumburg Caroline, “Marks & Spencer: Are National Tax Systems Éclaire?”, 46 *European Taxation* 9 (2006), pp. 431-442

Dourado, A. P., “From Saint Gobain to the Metallgesellschaft case: scope of non-discrimination of permanent establishments in the EC Treaty and the most-favoured-nation clause in EC Member States tax treaties”, 11 *EC Tax Review* 3 (2002), pp. 147-156

Durand, Pierre-Henry and Rutschamnn, Yves, “The Papillon case: a first step toward a new era in European tax treatment of groups?”, 18 *EC Tax Review* 3 (2009) pp. 122-130

Easterbrook, Frank H. & Fischl, Daniel R., “Limited Liability and the Corporation, 52 *University of Chicago Law Review,* (1985) pp. 89-117

Ecliffe, Craig, “Unfinished Business: Domestic Thin Capitalization Rules and the Non-Discrimination Articles in the OECD Model”, *Bulletin for International Taxation* 1, IBFD (2013), pp. 26-38

Eden, Sandra, “The Obstacles faced by the European Court of Justice in removing the “obstacles” faced by the taxpayer: the difficult case of double taxation” *British Tax Review* 6 (2010), pp. 610-628

Endres, Dieter, “The Concept of Group Taxation: A Global Overview”, 31 *Intertax*, Vol. 10, (2003), pp. 349-352

Engelen, Frank, "De fiscale eenheid als dekmantel voor verboden discriminaties", *NTFR* 2012/102.

Engelen, Frank, “De gevolgen van de zaal Papillon voor de Nederlandse fiscale eenheid”, *NTFR* 2009/73

Engelen, Frank, *Interpretation of Tax Treaties under International Law: A study of Articles 31, 32 and 33 of the Vienna Convention on the Law of Treaties and their application to tax treaties,* IBFD Doctoral Series no. 7 (2004)

Engelen, Frank, "De voorlichting van het Hof van Justitied van de Europese Gemeenshcappen in fiscale Zaken", *Tijdschrift voor Fiscaal Ondernemingsrecht*, 2001, pp. 117-121

Englisch, Joachim, "Nordea Bank Danmark A/S: National tax on profits – taxation of the activity of foreign permanent establishments of resident companies", *H&I* 2014/322, p. 10.311

Englisch, Joachim, "HMRC v Philips Electronics UK Ltd: another contribution to EU Law jurisprudence on loss relief", *British Tax Review* 5 (2012), pp. 585-595

Englisch, Joachim, "X Holding: Looking beyond Loss Relief Issues", in D. Weber & B. da Silva (eds.), *From Marks & Spencer to X Holding: The Future of Cross-Border Group Taxation*, EUCOTAX Series on European Taxation Vol. 29, Wolters Kluwer (2011), pp. 71-94

Englisch, Joachim, "Taxation of Cross-Border Dividends and EC Fundamental Freedoms", 38 *Intertax* 4 Kluwer Law International BV (2010), pp. 197-221

English, Joachim, et al,"Krankenheim Ruhesitz am Wannsee-Seniorenheimstatt: cross border loss relief", *Highlights & Insights on European Taxation* 2009/1.4, pp. 33-44

Englisch, Joachim, "The European Treaties' Implications for Direct Taxes", 33 *Intertax* 8/9, Kluwer Law International BV (2005), pp. 310-335

Englisch, Joachim, "Shareholder Relief and EC Treaty Law – Supranational 'Aims and Effects'? 33 *Intertax* 5 Kluwer Law International BV (2005), pp. 200-214

Englisch, Joachim, "Fiscal Cohesion in the Taxation of Cross-Border Dividends (Part Two), *European Taxation* 8, IBFD (2004), pp. 355-363

Erasmie, Anders, IFA Report Sweden "Non-discrimination at the crossroads of international taxation", *Cahiers de droit fiscal international* 93a (2008), pp. 567-586

Erasmus-Koen, Monica "Art. 9 of the OECD Model Convention", *Transfer Pricing and Business Restructuring*, IBFD (2009), pp. 99-144

Eustice, James S., "Tax Problems Arising From Transactions Between Affiliated or Controlled Corporations", 23 *Tax Law Review*, (1967), pp. 451-558

Farmer, Paul, "A difference of form or substance? A comparison of the discrimination analysis in EU law and in recent UK cases on tax treaties" in D. Weber (ed.) *EU Income Tax Law: Issues for the Years Ahead*, EC and International Tax Law Series Vol. 9 IBFD (2013), pp. 351-358

Farmer, Paul and Hine, Nicola, "A Oy: CJ confirms the Marks & Spencer no possibilities test and applies the case law in the context of a merger", in *H&I* 2013/5.6

Farmer, Paul & Last, Allison "The Final Losses-Exception in *Marks & Spencer"* in Dennis Weber & Bruno da Silva (eds.), *From Marks & Spencer to X Holding: The Future of Cross-Border Group Taxation*, Kluwer Law International BV, The Netherlands (2011), pp. 95-108.

Farmer, Paul "Striking a Proper Balance between the National Fiscal Interests and the Community Interest – a Perpetual Struggle?" In D.Weber (ed.) *The Influence of European Law on Direct Taxation: Recent and Future Developments*, EUCOTAX Series on European Taxation Vol. 16 (2007), pp. 31-34

Fibbe, Gijs, *EC Law Aspects of Hybrid Entities*, IBFD Doctoral Series no. 15 (2009)

Fleming Jr., J. Clifton, Peroni, Robert J., & Shay, Stephen E., "Fairness in International Taxation: The Ability-to-Pay Case for Taxing Worldwide Income, 5 *Florida Tax Review* 4, (2001), pp. 299-354

Fleming Jr., J. Clifton, Peroni, Robert J., & Shay, Stephen E., "Getting Serious About Curtailing Deferral of U.S. Tax on Foreign Source Income", 52, *SMU Law Review*, pp. 455-519

Francescucci, David et al. "Non Discrimination and Group Consolidation: The Delaware Case of the German Bundesfinanzhof and Beyond", in Raffaele Russo and Renata Fontana (eds.), *A Decade of Case Law: Essays in Honour of 10th anniversary of the Leiden Adv. LLM in International Tax Law*, IBFD 2008, pp. 125-167

Friedlander, Lara "The role of non discrimination clauses in bilateral income tax treaties after GATT 1994", *British Tax Review* 2 (2002), pp. 71-118

Gahleitner, Gerald & Ratzinger, Stefan, "International Group Taxation: An Overview's of Austria New Tax Incentive", *European Taxation* 11 IBFD (2005), pp. 509-514

Gahleitner, Gerald and Nowotny, Clemens, "Austrian Court Rules on the Treatment of Cross-Border Losses under Tax Treaties with Exemption Method", *Bulletin* 4 IBFD (2002), pp. 155-158

Gammie, Malcolm "The compatibility of national tax principles with the single market", in Frans Vanistendael (ed.), *EU Freedoms and Taxation*, EATLP International Tax Series, Vol. 2, IBFD (2006), pp. 112-140

Gammie, Malcolm "Double Taxation, bilateral treaties and fundamental freedoms of the EC Treaty", in (eds.) Henk van Arendonk, Frank Engelen, Sjaak Jansen, *A Tax Globalist: Essays in Honor of Maarten J. Ellis*, (IBFD online) 2005

Gammie, M. "The Role of the European Court of Justice in the Development of Direct Taxation in the European Union", *Bulletin for International Taxation* 3 (2003), pp. 86-98.

Garrido, Bruno "Interaction between the Interpretation of Non-Discrimination Provisions in Tax Treaties and in the EC Treaty: An Apparent Rather than Real Conflict", *EC Tax Review* 4, Kluwer Law International BV (2009), pp. 263-272

Gebhardt, Ronald & Quilitzsch, Karsten "Cross Border Loss Relief in the EU: Implications of Recent Developments in Germany Regarding Outbound Permanent Establishments", *EC Tax Review* 6, Kluwer Law International BV (2011), pp. 263-272

Ghosh, Julian "*Cadbury Schweppes*: Breach, Abuse Justification and Why They Are Different", in Rita de la Feria and Stefan Vogenauer (eds.) *Prohibition of Abuse of Law – A New General Principle of EU Law?* Hart Publishing (2011), pp. 459-468

Ghosh, Julian, "Country Report United Kingdom", in G. Maisto (ed.) *International and EC Tax Aspects of Groups of Companies*, EC and International Tax Law Series, Vol. 4, IBFD (2008), pp. 493-501

Ghosh, Julian *Principles of the Internal Market and Direct Taxation*, Key Haven Publications PLC (2007)

Ghosh, Julian "The Marks & Spencer Case: A Prediction of the ECJ Holding", *Tax Notes International*, 4 April 2005, pp. 33-43

Giaconia, Massimo, IFA Report Italy, "Group Taxation", *Cahiers de droit fiscal international*, Vol. 89b, (2004), pp. 369-388

Goolsbee, Austan, "Taxes, Organizational Form, and the Dead Weight Loss of the Corporate Income Tax, *Journal of Public Economics,* vol. 69, July 1998, pp. 143-152

Gozdziowska, Patrycia, Kuzniacki Blazej & Wickel, Tomasz, IFA Report Poland "Qualification of Taxable Entities and Treaty Protection", *Cahiers De Droit Fiscal International,* Vol. 99b, pp. 629-650

Goldberg, Stanford H. and Glicklich, Peter A. "Treaty-Based Nondiscrimination: Now You See It Now You Don't", 51 *Florida Tax Review* 1 (1992), pp. XX

Graetz, M. J.& Warren, A.C., "Income Tax Discrimination: Still Stuck in the Labyrinth of Impossibility" 121 *Yale Law Journal* (2012), pp. 1118-1167.

Graetz, Michael J. & Grinberg, Itai "Taxing International Portfolio Income" *Tax Law Review* 56 (2002), pp. 537-586

Graetz, Michael J., "The David R. Tillinghast Lecture – Taxing International Income: Inadequate Principles, Outdated Concepts, and Unsatisfactory Policies", 54 *Tax Law Review* (2000), pp. 261-336

Green, Robert A. "The Troubled Rule of Nondiscrimination in Taxing Foreign Direct Investment", 26 *Law & Policy in International Business* (1994-1995), pp. 113-164

Gutmann, Daniel "Taxation of groups of companies: lessons to be drawn from Oy AA", 9 *Tax Planning International Transfer Pricing* 3 (2008), pp. 9-11

Gutmman, D. "Marks & Spencer case: proposals for an alternative way of reasoning" *EC Tax Review* 3 (2003), pp. 154-158

Hardwick, Emma and McGowan, Michael, "SCA Group Holding BV, X AG and Others and MSA International Holdings BV and another: the CJEU considers the

impact of EU Law on the scope of tax groups or fiscal unities*", British Tax Review* 5 (2014), pp. 530-537

Harris, Peter A. *Corporate Shareholder/Income Taxation and Allocating Taxing Rights between Countries*, IBFD (1997)

Haslehner, Werner "Nationality Non-discrimination and Article 24 OECD – Perennial Issues, Recent Trends and New Approaches", D. Weber (ed.) *Non-discrimination in tax treaties: selected issues from a global perspective* IBFD, Amsterdam (forthcoming)

Haslehner, Werner "Consistency" and Fundamental Freedoms: The Case of Direct Taxation", *Common Market Law Review* 50 Kluwer Law International 2013, pp. 737-772

Haslehner, Werner "Tackling complex discrimination in international taxation", *British Tax Review* 5 (2012), pp. 596-622

Haslehner, Werner C. " Cross-Border Loss Relief for Permanent Establishments under EC Law", 64 *Bulletin for International Taxation* 1 (2010), pp. 33-44

Haslehner, Werner *Das Betriebsstättendiskriminierungsverbot im Internationalen Steuerrecht,* Series on international tax law 58*,* Linde (2009)

Hauge, Harald, IFA Report Norway "Group Taxation", *Cahiers de droit fiscal international*, Vol. 89b, (2004), pp. 511-528

Hellerstein, Walter, Kofler, Georg W., & Mason, Ruth, "Constitutional Restraints on Corporate Tax Integration", 62 *Tax Law Review* (2008), pp. 1-66

Hellerstein, Walter. "The Case for Formulary Apportionment", *International Transfer Pricing Journal* IBFD (2005), pp. 103-111

Helminen, M. "The Esab Case (C-231/05) and the Future of Group Taxation Regimes in the EU", 33 *Intertax* 12 (2005) pp. 595-602

Helminen, M. " Freedom of Establishment and Oy AA", 47 *European Taxation* 11 IBFD (2007), pp. 490-498.

Hines Jr., James R., "Lessons from Behavioral Responses to International Taxation", 2 *National Tax Journal* 52 (1999), pp. 305-322

Hines Jr., James R., "The Transfer Pricing Problem: Where the Profits Are", *NBER Working Paper Series*, (1990)

Hinnekens, Luc and Hinnekens, Philip IFA General Report "Non-discrimination at the crossroads of international taxation", *Cahiers de droit fiscal international* 93A, (2008), pp. 15-54

Hinnekens, Luc "AMID: The Wrong Bridge or a Bridge Too Far? An Analysis of a Recent Decision of the European Court of Justice", European Taxation 6 IBFD (2001), pp. 206-210

Hinnekens, Luc "Compatibility of Bilateral Tax Treaties with European Community Law – Application of the Rules", *EC Tax Review*, 1995/4, Kluwer Law International BV, pp. 202-237

Hinnekens, Philippe "Non-discrimination article in the OECD Model Convention needs fundamental review", *EC Tax Review* 6 (2008), pp. 248-249

Hintsanen, Lari and Viitanen, Päivi "Supreme Administrative Court Ruling on the Finland-US Tax Treaty Non-Discrimination Clause, *European Taxation* 10 (2004), IBFD, pp. 460-46

Hintsanen, Lari and Petterson, Kennett "Supreme Administrative Court Rules on Taxation of Dual Resident Companies", *European Taxation* 4, IBFD (2004), pp. 192-196

Ho, Virginia E. Harper, "Theories of Corporate Groups: Corporate Identity Reconceived", *University of Kansas School of Law Working Paper* no. 2011-3

Hohenwarter, Daniela, *Verlusterwertung im Konzern* Band 59, Lexis Nexis (2009)

Hohenwarter, Daniela, "Country Survey Austria" in G. Maisto (ed.) *Tax Treaties and Domestic Law - EC and International Tax Law Series,* Vol. 2 IBFD, (2006), pp. 161-208

Hole, Geir Peter, IFA Norway Report "Non-discrimination at the crossroads of international taxation", *Cahiers de Droit Fiscal International* 93b (2008), pp. 441-454

Holmes, Kevin, *International Tax Policy and Double Tax Treaties: An Introduction to Principles and Application*, IBFD (2007)

Hughes, David, “Imperial Chemical Industries plc (ICI) v. Kenneth Hall Colmer (Her Majesty's Inspector of Taxes)” 53 *Bulletin for International Fiscal Documentation* 1 IBFD (1999), pp. 13-15

Hughes, David “Nondiscrimination: A Consideration of Article 24 (5) OECD Model Convention”, *Bulletin* 9 (1996), pp. 390-393

Isenbaert, Mathieu, *EC Law and the Sovereignty of the Member States in Direct Taxation* IBFD Doctoral Series (2010), Vol. 19

Isenbaert, Mathieu and Valjemark, Caroline, “M&S judgment: the ECJ caught between a rock and a hard place”, *EC Tax Review* 1 (2006), pp. 10-17

Isenbergh, Joseph, “Perspectives on the Deferral of U.S. Taxation of the Earnings of Foreign Corporations”, 66 *Taxes* 12 (1988), pp. 1062-1071

Jacobs, Francis G., “The Evolution of the European Legal Order”, 41 *Common Market Law Review* 2 (2004), pp. 303-316

Jacobs, Otto H., et al., “ICT and International Corporate Taxation: Tax Attributes and Scope of Taxation”, 31 *Intertax* 6/7 (2003), pp. 214-231

Jeffrey, Ramon J., *The Impact of State Sovereignty in Global Trade*, Series on International Taxation 23, Kluwer Law International (1999)

Kahlenberg, Christian, “Recognition of Final Losses of Permanent Establishments”, 54 *European Taxation* 9 IBFD (2014), pp. 414-417

Kalungi, Ronald, “Confusion worse confounded: what Boake Allen teaches us about the (non-) incorporation and interpretation of double taxation treaties in the United Kingdom”, *British Tax Review* 1 (2009), pp. 129-154.

Kanduth-Kristn, Sabine, Gregori, Sarah & Komarek, Ernst, “Amendments to Group Taxation Regime”, 54 *European Taxation* 6 IBFD (2014), pp. 261-263.

Kaplan, Richard L., “International Tax Enforcement of the Special Transfer Pricing Challenge”, *University of Illinois Law Review* (1990), pp. 299-328

Kaplow, Louis, “A Note on Horizontal Equity”, 1 *Florida Tax Review* 3, (1993), pp. 191-196

Kaplow, Louis, “Horizontal Equity: Measures in Search of a Principle, 42 *National Tax Journal*, (1989), pp. 139-154

Kaufman, Nancy H., "Fairness and the Taxation of International Income" 29 *Law & Policy in International Business* 2 (1998), pp. 145-203

Kemmeren, Eric, "The Internal Market Approach Should Prevail over the Single Country Approach", in Luc Hinnekens & Philip Hinnekens (eds.) *A Vision of Taxes within and outside the European Borders Festschrift in Honor of Prof. Dr. Frans Vanistendael*, Kluwer Law International, The Hague, The Netherlands (2008), pp. 555-586

Kiekebeld, B.J., "Fiscale eenheid niet over de grenzen!", *NFTR* B 2010-18

Kiekebeld, B.J. "Grensoverschrijdende verliewsverrekening, *NFTR-B* 2007/47

Kingston, Suzanne, "A Light in the Darkness: Recent Developments in the ECJ's Direct Tax Jurisprudence", *Common Market Law Review* 44 (2007), pp. 1321-1359

Kingston, Suzanne, "The Boundaries of Sovereignty: The ECJ's Controversial Role Applying Internal Market Law to Direct Tax Measures", *Cambridge Yearbook of European Legal Studies* 9 (2007), pp. 287-311

Kofler, George "Tax Treaty "Neutralization" of Source State Discrimination under the EU Fundamental Freedoms?" *Bulletin for International Taxation* 12 IBFD (2011), pp. 684-690

Kofler, George "Marks & Spencer: Bedingte Verpflichtung zur Hereinnahme von Verlusten ausländischer Tochtergesellschaften", *ÖStZ* 2006/87, pp. 48-56

Kok, Reinout "Exit Taxes for Companies in the European Union After National Grid Indus BV", *EC Tax Review* 4 Kluwer Law International (2012), pp. 200-206

Kok, Reinout "Domestic and Cross-Border Loss Relief in the European Union, 38 *Intertax* 12, Kluwer Law International BV (2010), pp. 663-671

Kollruss, Thomas "Must a Dual Resident Subsidiary Be Included in a Fiscal Unity on the Basis of Primary EU Law? The Example of Germany and Comparative Analysis of the EU and EEA Member States", 68 *Bulletin for International Taxation* 4/5 IBFD (2014), pp. 250-268

Kramer, Jõrg-Dietrich, "Tax Consolidation Between a U.S. Corporation and its German Subsidiary", *Tax Planning International Review* (2003), pp. 6-8

Kristoffersson, Eleaonor, "Groups of Companies and Intra-Company Dealings – A Comparison Between Income tax and Value Added Tax", in Michael Lang (eds.) *Value Added Tax and Direct Taxation: Similarities and Differences*, IBFD (2009), pp. 919-929

Lang, Michael and Staringer, Claus, IFA General Report "Qualification of Taxable Entities and Treaty Protection" *Cahiers de Droit Fiscal International* Vol. 99b (2014), p. 17-86

Lang, Michael & Owens, Jeffrey, *The Role of Tax Treaties in Facilitating Development and Protecting the Tax Base*, WU International Taxation Research Paper Series No. 2014 - 03

Lang, Michael, "Has the Case Law of the ECJ on Final Losses Reached the End of the Line?", *European Taxation* 12 IBFD (2014), pp. 530-540

Lang, Michael, "The term "enterprise" and Article 24 of the OECD Model Convention" in G. Maisto (ed.) *The Meaning of "Enterprise", "Business" and "Business Profits" under Tax Treaties and EU Tax Law*, EC and International Tax Law Series, Vol. 7 IBFD (2011), pp. 107-125

Lang, Michael, *Introduction to the Law of Double Tax Conventions*, Linde Verlag/IBFD (2010)

Lang, Michael, "Recent Case Law of the ECJ in Direct Taxation: Trends, Tensions and Contradictions", *EC Tax Review* 3 (2009), pp. 98-113

Lang, Michael, "ECJ case law on cross-border dividend taxation-recent developments," 17 *EC Tax Review* 2 (2008), Kluwer Law International BV, pp. 67-77

Lang, Michael & Burger, Florian, "The role of the OECD Commentary in Tax Treaty Interpretation", 23 *Australian Tax Forum* 2008, pp. 95-108

Lang, Michael, "Double Taxation and EC Law" in Reuven S. Avi-Yonah, James R. Hines Jr. and Michael Lang (eds.) *Comparative Fiscal Federalis: Comparing the European Court of Justice and the US Supreme Court's Tax Jurisprudence*, EUCOTAX Series on European Taxation Vol. 14, Kluwer Law International (2007), pp. 12-36.

Lang, Michael, "Direct Taxation: Is the ECJ Heading into a New Direction?" 46 *European Taxation* 9, IBFD (2006), pp. 421-430.

Lang, Michael, “The Marks & Spencer Case – The Open Issues Following the ECJ’s Final Word”, 46 *European Taxation* 2 IBFD (2006), pp. 54-67

Lang, Michael, "Marks and Spencer - more questions than answers: an analysis of the Opinion delivered by Advocate General Maduro", *EC Tax Review* 2 (2005), pp. 95-100

Lang, Michael, IFA General Report “Double Non-Taxation”, *Cahiers de Droit Fiscal International*, Vol. 89a (Deventer: Kluwer, 2004)

Lang, Michael, “CFC Regulations and Double Taxation Treaties”, 57 *Bulletin – Tax Treaty Monitor,* 2 IBFD (2003)”, pp. 51-58

Lang, Michael, “Taxation of Income in the Hands of Different Taxpayers from the Viewpoint of Tax Treaty Law”, 55 *Bulletin-Tax Treaty Monitor* 12, IBFD (2001), pp. 596-600

Lang, Michael, *The Application of the OECD Model Tax Convention to Partnerships: A Critical Analysis of the Report Prepared by the OECD Committee of Fiscal Affairs* (Linde Verlag Band 11, 2000)

Last, Alison, “FCE Bank Plc: Group Relief in reliance on a provision in a Double Taxation Convention (Court of Appeal) ” *Highlights & Insights on European Taxation* 2013/2.2

Laurin, Alexandre, “Cleaning Up the Books: A Proposal for Revamping Corporate Group Taxation in Canada”, *Commentary Fiscal Policy*, C. D. Howe Institute (2009)

Le Gall, Jean Pierre “The David R. Tillinghast Lecture: Can a subsidiary be a Permanent Establishment of its Foreign Parent? Commentary on Article 5, Par. 7 of the OECD Model Tax Convention”, 60 *Tax Law Review* 4, (2006-2007) pp. 179-213

Lenaerts, Koen, “The Concept of ‘Abuse of Law’ in the Case Law of the Euoprean Court of Justice in Direct Taxation”, 22 *Maastricht Journal of European and Comparative Law* (2015), pp. 329-351.

Lehner, Moris M., “The Influence of EU Law on Tax Treaties from a German Perspective”, *Bulletin* 8/9 IBFD (2000), pp. 461-470

Link, Simon Patrick, "Application of tax treaties to companies subject to national group taxation regimes", in G. Maisto (ed.) *International and EC Tax Aspects of Groups of Companies, EC and International Tax Law Series*, Vol. 4, IBFD (2008), pp. 137-146.

Link, Simon Patrick, "Country Report Germany", in G. Maisto (ed.) *International and EC Tax Aspects of Groups of Companies*, EC and International Tax Law Series, Vol. 4, IBFD (2008), pp. 301-326

Lokken, Lawrence, "The Sources of Income from International Uses and Dispositions of Intellectual Property", 36 *Tax Law Review* 3 (1981), pp. 233-339

Lousa, Maria dos Prazeres, IFA Report Portugal, "Group Taxation", *Cahiers de droit fiscal international*, Vol. 89b, (2004), pp. 547-564

Lyal, R., "Non-discrimination and Direct Tax in Community Law", *EC Tax Review* 2 *(*2003), pp. 68-74.

Lyons, Timothy, "Philips Electronics UK Ltd v HMRC: More unjustifiable restrictions on loss relief", *British Tax Review* 1 (2010), pp. 46-54

Lyons, Timothy, "Marks & Spencer, something for everyone?" *British Tax Review* 1 (2006), pp. 9-14

Lyons, Timothy, "Marks & Spencer: striking a balance", *British Tax Review* 3 (2005), pp. 251-260.

Lyons, Timothy, "Tax in a single market – Bosal and Marks and Spencer plc", *British Tax Review* (2003), pp. 443-449

Lyons, Timothy, "ICI v Colmer affirms Community supremacy", 1 *British Tax Review* (1999), pp. 65-69

Maduro, Miguel Poiares, *We, the Court – The European Court of Justice & the European Economic Constitution*, Hart Publishing 2002

Maisto, Guglielmo, "Taxation of Groups and CCCTB, in A.P. Dourado (ed.), Movement of Persons and Tax Mobility in the EU, IBFD (2014), pp. 355- 362

Marres, Otto "Interest Deduction Limitations: when to apply Articles 9 and 24 (4) of the OECD Model Convention?" in D. Weber (ed.) *Non-discrimination in tax treaties: selected issues from a global perspective* IBFD, Amsterdam (forthcoming)

Marres, Otto, "The Principle of Territoriality and Cross-Border Loss Compensation", 39 *Intertax* 3, Kluwer Law International BV (2011) pp. 112-125

Marres, Otto, "Beëindiging van rechtswege per 1 januari 2003 van fiscale eenheid met EG-dochtervennootschap. Weigering horizontale verrekening van (nadien geleden) verliezen van EG-dochtervennootschap is niet in strijd met EG-recht", in *BNB* 2010/22

Martin, Philippe, "Dividends and Withholding Taxes," in G. Maisto (ed.) *Taxation of Intercompany Dividends under the EU Fundamental Freedoms?*, EC and International Tax Law Series, Vol. 8, IBFD (2012) pp. 25-38

Martin, Philip, "The Marks & Spencer EU group relief case – a rebuttal of the "taxing jurisdiction" argument", *EC Tax Review* 2 (2005), pp. 61-68

Martin Jimenez, Adolfo J., *Towards Corporate Tax Harmonization in the European Community: an Institutional and Procedural Analysis*, Series on International Taxation no. 22, Kluwer Law International (1999)

Martinez Giner, Luís A. and Martinez Munoz, Yolanda, IFA Spain Report, "Non-discrimination", *Cahiers de droit fiscal international*, Vol. 93a, (2008), pp. 545-566

Mason, Ruth and Knoll, Michael S., "What is Tax Discrimination?" 121 *Yale Law Journal* (2012),

Matsui, Y., IFA General Report, "Group Taxation", *Cahiers de droit fiscal international*, Vol. 89b, (2004), pp. 21-67

McDaniel, Paul R. & Repetti, James R., "Horizontal and Vertical Equity: The Musgrave/Kaplow Exchange", 1 *Florida Tax Review* 10, (1993) pp. 607-622

McMahon, Jr., Martin J., & Abreu, Alice G., "Winner-Take-All Markets: Easing the Case for Progressive Taxation, 4 *Florida Tax Review*, (1998), pp. 1-81

Message, Nicolas, "Country Report France", in G. Maisto (ed.) *International and EC Tax Aspects of Groups of Companies*, EC and International Tax Law Series, Vol. 4, IBFD (2008), pp. 277-300

Meussen, Gerard T. K. "The ECJ's Judgement in Krankenheim – The Last Piece in the Cross-Border Loss Relief Puzzle? 49 *European Taxation* 7 (2009), pp. 361-363

Meussen, G. "The Marks & Spencer case: Reaching the Boundaries of the EC Treaty" *EC Tax Review* 3 (2003), pp. 144-148

Michelsen, Aage, IFA General Report "Tax Treatment of Corporate Losses" *Cahiers de droit fiscal international*, Vol. 83b, (1998), pp. 23-69

Millán, Emilio Cencerrado, "Country Report Spain", in G. Maisto (ed.) *International and EC Tax Aspects of Groups of Companies*, EC and International Tax Law Series, Vol. 4, IBFD (2008), pp. 445-492

Mitroyanni, I., *Integration Approaches to Group Taxation in the European Internal Market*, EUCOTAX Series on European Taxation, Vol. 21, Kluwer Law International, The Hague (2008)

Mitschke, Wolfgang "Keine Disrkiminierung nach Art. XX Abs. 4 DBA-Grossbritannien in Fallen auslanderbeherrschter Inlandskapitalgesellschaften, *IStR* 2011, pp. 537-542.

Monsenego, Jérôme *Taxation of Foreign Business Income Within the European Internal Market*, IBFD Doctoral Series Vol. 22 (2012)

Mooij, Hans "Netherlands Supreme Court Decides in Taxpayer's favour regarding the Application of Tax Treaties to a Fiscal Unity under Netherlands Domestic Tax Law", *Bulletin for International Taxation* 12 IBFD (2012), pp. 637-639

Mössner, Jörg Manfred "Änmerkung zum Urteil des Bunderfinanzhofs", *IStR* (2011), pp. 697-701

Mössner, Jörg Manfred, "Gewerbesteuerliche Organschaft zwischen einem in Grossbritannien ansassigen Organtrager und einer inlandischen Organgesellchaft uber eine inlandische Zwischenholding", *IStR* (2011), pp. 345-348

Mössner, Manfred "Source versus Residence – an EU Perspective", 60 *Bulletin for International Taxation* 12 IBFD (2006), pp. 501-506

Muller, J., *The Netherlands in International Tax Planning*, Online Books (IBFD 2011)

Musgrave, Peggy B. "Sovereignty, Entitlement, and Cooperation in International Taxation, "26 *Brooklyn Journal of International Law* 4 (2001), pp. 1335-1556

Musgrave, Richard A., “Horizontal Equity: A Further Note”, 1 *Florida Tax Review* 6, (1993), pp. 354-359

Musgrave, Richard A., *Fiscal Systems*, New Haven and London: Yale University Press (1969)

Neyt, Robert & Peeters, Steven, ”Balanced Allocation and Coherence: Some thoughts in Light of Argenta and K”, *EC Tax Review* 2014/2, Kluwer Law International BV, pp. 64-75

Nieminen, Martti, “Transfer of Assets Regime Applicable to US Company’s PE under Tax Treaty Non-Discrimination Rule”, 54 *European Taxation* 7 IBFD (2014), pp. 325-329.

Nikolakakis, Angelo, “The Common Law Perspective on the International and EC Aspects of Groups of Companies”, in G. Maisto (ed.) *International and EC Tax Aspects of Groups of Companies*, EC and International Tax Law Series, Vol. 4, IBFD (2008), pp. 21-44

O´Brien, James G., "The Nondiscrimination Article in Tax Treaties", 10 *Law & Policy in International Business* (1978), pp. 545-612

O’Shea, Tom, “European Tax Controversies: A British-Dutch Debate: Back to Basics and Is the ECJ Consistent?”, *World Tax Journal* 2 IBFD, (2013), pp. 100-127

O’Shea, Tom “German Loss Deduction and Reintegration Rules and the ECJ”, 53 *Tax Noters International* 11, 16 March 2009, pp. 967-969

O´Shea, Tom, “Freedom of Establishment Tax Jurisprudence: Avoir Fiscal Re-Visited”, *EC Tax Review* 6 (2008), pp. 259-275

O’Shea, Tom, “Marks & Spencer v Halsey (HM Inspector of Taxes): Restriction, Justification and Proportionality*” EC Tax Review* 5 (2006), pp. 66-82

Oliver, J. David B., “Other similar enterprises – NEC Semi-Conductors Ltd and others v Inland Revenue Commissioners”, *British Tax Review* 2 (2004), pp. 80-84

Oliver, J. David B. “Entitlement of a permanent to third state treaty benefits: Saint Gobain”, *British Tax Review* 3 (2000), pp. 174-181

Oliver, J. David B., "Differential treatment or discrimination", *British Tax Review* 6 (1993), pp. 435-441

Oliver, J. David B., "Other similar enterprises", *British Tax Review* 5 (1989), pp. 141-146

Ottosen, Arne Mollin and Norremark, Michael, "Denmark: Joint Taxation", in D. Weber and B. Da Silva (eds) *From Marks & Spencer to X Holding: The Future of Cross-Border Group Taxation,* EUCOTAX Series on European Taxation Vol. 29, Wolters Kluwer (2011), pp. 153-160.

Palma, Rui Camacho, "X Holding: A Flawed Judgement or yet Another Lesson in Consistency", *The EC Tax Journal* 1, (2010) pp. 1-37

Palma, Rui Camacho, "The Paradox of Gross Taxation" 38 *Intertax* 12 (2010), pp. 624-642

Palmer, Robert L., "Toward Unilateral Coherence in Determining Jurisdiction to Tax Income", 30 *Harvard International Law Journal* 1, (1989), pp. 1-64

Panayi, Christiana H.J.I., 'Reverse Subsidiarity and eu Tax Law: Can Member States Be Left to Their Own Devices?', *British Tax Review* 3 (2010), pp. 279–281

Papotti, Raul-Angelo, "Treaty Non-Discrimination Clauses in Group Consolidation Situations", 31 *Intertax* 10, Kluwer Law International (2003), pp. 320-328

Parolini, Andrea, "Cross-Border Group Taxation Regimes: VAT/GST v. Direct Taxation" in Michael Lang (eds.) *Value Added Tax and Direct Taxation: Similarities and Differences*, IBFD (2009), pp. 931-959

Peetermans, Marie-Aline and Staes, Melanie, "K v Finland: EU Developments in the Are of Foreign Loss Deduction Rules", *EC Tax Review* 2014/1, Kluwer Law International BV pp. 56-59

Penttilä, Seppo, IFA Report Finland "Non-discrimination at the crossroads of international taxation", *Cahiers de droit fiscal international* Vol. 93a (2008), pp. 257-266

Perdelwitz, Andreas, "Recent Developments on the Deductibility of Foreign Permanent Establishment Losses in Germany", 51 *European Taxation* 1 IBFD (2011), pp. 31-34

Pezzela, Domenico, "Final Losses under EU Tax Law: Proposal for a Better Approach", 54 *European Taxation* 2/3, (IBFD on-line 2015)

Pijl, Hans, "The Excluded Resident and the Term "Law/Laws" in Article 4 of the OECD Draft (1963) and the OECD Model (1977/2010), *Bulletin for International Taxation* 1, IBFD (2012), pp. 3-25

Pijl, Hans, IFA Report Netherlands "Conflicts in the Attribution of Income to a Person", *Cahiers de Droit Fiscal International*, Vol. 92b (2007) pp. 447-467

Piltz, Detlev, J. IFA General Report "International Aspects of Thin Capitalization", *Cahiers de droit fiscal international*, Vol. 81b (1996), pp. 83-139

Pinto Nogueira, Joao Felix, "Portugal: PE and Non-Discrimination Regarding Domestic Relief for Double Economic Taxation", in M. Lang et al. *Tax Treaty Case Law around the Globe* 2014, IBFD online (2014).

Pistone, P., "Tax treatment of foreign losses: an urgent issue for the European Court of Justice", 12 *EC Tax Review* 3, The Hague (2003), pp. 149-154.

Princen, Savina and Gérard, Marcel, "International Tax Consolidation in the European Union: Evidence of Heterogeinity", *European Taxation* 4 IBFD (2008), pp. 174-185.

Polivanova-Rosenauer, Tatjana, "The Interpretation of Article 23 of the OECD Model", *European Taxation* 3 IBFD (2002), pp. 123-129

Portugal, António Moura, "Estatuto Pessoal e Nacionalidade das Sociedades Nos Acordos de Promoção de Investimentos e nos Acordos de Dupla Tributação Celebrados por Portugal", *Cadernos de Ciência e Técnica Fiscal* n.º 404, pp. 88-94

Pötgens, Frank P. G. & Dijkstra, Wiebe E.J., "Cross-Border Fiscal Unities and Tax Treaties: Nothing New under the Sun?", 42 *Intertax* 2 Kluwer Law International BV (2014) pp. 92-105

Pötgens, Frank P.G., "The Netherlands Supreme Court Again Excludes Credit of Withholding Tax in a Triangular case", *European Taxation* 4, IBFD (2008), pp. 211-212

Pötgens, Frank "Article 15 (2) (b) of the OECD Model: Problems Arising from the Residence Requirement for Certain Types of Employers", *European Taxation* 6/7 (2002) IBFD, pp. 220-226

Ranta-Lassila, Hannele, IFA Report Finland, "Group Taxation", *Cahiers de droit fiscal international*, Vol. 89b, (2004), pp. 257-267

Reimer, Ekkehart "Interpretation of Tax Treaties", *European Taxation* 12 IBFD (1999), pp. 458-474

Rhee, Robert, "Bonding Limited Liability" 51 *William and Mary Law Review* (2010), pp. 1417-1488

Richelle, Isabelle "Cross-Border Loss Compensation: State and Critique of the Judicature" in Isabelle Richelle et al. (eds.) *Allocating Taxing Powers within the European Union*, MPI Studies in Tax Law and Public Finance 2 (Springer) 2012, pp. 101-122

Ring, Diane, IFA US Report "The Debt to Equity Conundrum", *Cahiers du Droit Fiscal International* Vol. 97b (2012), pp. 771-792

Ring, Diane, "International Tax Relations: Theory and Implications, 60 *Tax Law Review* (2007), pp. 83-154

Ring, Diane M., "One Nation Among Many: Policy Implications of Cross-Border Tax Arbitrage", 1 *Boston College Law Review* 44 (2002), pp. 70-175

Rivier, Jean-Marc, IFA General Report "The fiscal residence of companies", *Cahiers de Droit Fiscal International*, Vol. 72a, pp. 47-76.

Robert, Eric, "The New French 3% Withholding Tax on Profit Distributions: A Minefield for the French Government", 53 *European Taxation* 2/3 IBFD (2013), pp. 115-120.

Rupal, Yash, IFA Report United Kingdom, "Group Taxation", *Cahiers de droit fiscal international*, Vol. 89b, (2004), pp. 685-706

Rosenbloom, H. David, "Where's the Pony? Reflections on the Making of International Tax Policy", *Bulletin for International Taxation* 11 (IBFD) 2009, pp. 535-542

Rosenbloom, H. David, "From the Bottom Up: Taxing The Income of Reign Controlled Corporations", 26 *Brooklyn Journal of International Law,* (2000), pp. 1526-1530

Rosenbloom, H. David, "Towards a New Tax Treaty Policy for a New Decade", 9 *American Journal of Tax Policy* (1991), pp. 77-94

Ruding, Onno, "The David R. Tillinghast Lecture – Tax Harmonization in Europe: The Pros and Cons", 54 *Tax Law Review* (2000), pp. 101-110

Russo, Raffaele, "Historical Development of Art. 7 of the OECD Model", in Raffaele Russo (ed.), *"The Attribution of Profits to Permanent Establishments – The taxation of intra-company dealings",* (IBFD) 2005, pp. 15-19

Rust, Alexander, "Germany: Cross border Group Consolidation" in M. Lang et al. (eds.) *Tax Treaty Case Law around the Globe*, IBFD Online Books (2012)

Rust, Alexander, "Business" and "Business Profits", in G. Maisto (ed.) *The Meaning of "Enterprise", "Business" and "Business Profits" under Tax Treaties and EU Tax Law*, EC and International Tax law Series, Vol. 7 (2011), pp. 85-106

Rust, Alexander, "International Tax Neutrality and Non-Discrimination – A Legal Perspective", in M. Lang et al (eds.) *Tax Treaties: Building Bridges between Law and Economics*, IBFD (2010), pp. 629-649

Rust, Alexander, "BMF: Discriminierungesverbite der DBA; BFH-Urt. V. 29.1.2003, I R 6/99, zu Art. 24 Abs. 4 DBA-USA", *IStR* 2005, pp. 26-27

Rust, Alexander, "Ermöglischen Diskriminierungsverböte eine Organshaft über die Grenze", *IStR* 19 (2003), p.. 658-661

Saez de Olazagoitea, Javier, *La tributación Consolidada de Los Grupos de Sociedades: Regimen Vigente y un Modelo para su Reforma*, Arazandi 2002.

Sanders, Thies "X Holding, the Morning after in the Netherlands", in Dennis Weber and Bruno da Silva (eds.) *From Marks & Spencer to X Holding: The Future of Cross-Border Group Taxation*, EUCOTAX Series on European Taxation Vol. 29, Wolters Kluwer (2011), pp. 125-135

Sanders, M. and Stevens, A.J.A., "De tussenregeling voor valutaresultaten op deelnemingen" *Weekblad vor Fiscaal Recht* 2011/1290

Santiago, Bruno, "Non-Discrimination Provisions at the Intersection of EC and International Tax Law", *European Taxation* 5 IBFD (2009), pp. 248-262

Santiago, Bruno, *O princípio da não-discriminação no cruzamento do Direito Fiscal Internacional com o Direito Fiscal Comunitário*, Cadernos de Ciência e Técnica Fiscal, 207 (2009)

Sasseville, Jacques, "Enterprise", "Business" and "Business Profits": From the League of Nations to the Current OECD Model Tax Convention, in G. Maisto (ed.) *The Meaning of "Enterprise", "Business" and "Business Profits" under Tax Treaties and EU Tax Law*, EC and International Tax law Series, Vol. 7 IBFD (2011), pp. 41-69

Sasseville, Jacques, "The Meaning of Place of Effective Management"; G. Maisto (ed.) *Residence of Companies under Tax Treaties and EC Law*, EC and International Tax Law Series, Vol. 5 IBFD (2009) pp. 287-302,

Sasseville, Jacques, "Treaty recognition of groups of companies", in G. Maisto (ed.) *International and EC Tax Aspects of Groups of Companies*, EC and International Tax Law Series, Vol. 4, IBFD (2008), pp. 129-136

Sasseville, Jacques, "The Role of Tax Treaties in the 21st Century", *Bulletin-Tax Treaty Monitor* 6 (IBFD) 2002, pp. 246-248

Schaper, Marcel, "The Need to Prevent Abusive Practices and Fraud as a Composite Justification", 23 EC Tax Review 4 (2014), pp. 220-229.

Schneider, Robert, "Group Taxation Regime: A Landmark Model", *Derivatives & Financial Instruments* 5/6 IBFD (2006), pp. 118-128

Schön, Wolfgang, "Neutrality and Territoriality – Competing or Converging Concepts in European Tax Law?", 69 *Bulletin for International Taxation* 4/5 IBFD (2015), pp. 271-293

Schön, Wolfgang, "Transfer Pricing, the Arm's Length Standard and European Union Law", Max Planck Institute for Tax Law and Public Finance, Working Paper 2011-08, September 2011, available http://papers.ssrn.com/sol3/papers.cfm?abstract_id=1930237 accessed: 15 June 2014).

Schön, Wolfgang, "Taxing Multinationals in Europe", Max Planck Institute for Tax Law and Public Finance Working Paper 2012-11 (December 2012), available at http://ssrn.com/abstract=2185282 (accessed on 7 July 2013)

Schön, Wolfgang, "International Tax Coordination for a Second-Best World (Part III)", 3 *World Tax Journal* 1 IBFD (2010), pp. 227-261

Schön, Wolfgang, "International Tax Coordination for a Second-Best World (Part I)", *World Tax Journal* 1 IBFD 2009, pp. 67-114

Schön, Wolfgang, "Loosing Out at the Snooker Table: Cross-Border Loss Compensation for PE´s and the Fundamental Freedoms", in L. Hinnekens and P. Hinnekens (eds.) *A Vision Within and Outside the European Borders, Festschrift in honor of Frans Vanistendael* Kluwer Law International The Netherlands (2008), pp. 813-830

Schön, Wolfgang, "Group Taxation and the CCCTB", 48 *Tax Notes International* 11, Arlington (2007), pp. 1063-1080

Schön, Wolfgang, "Attribution of Profits to PEs and the OECD 2006 Report", 46 *Tax Notes International* 10, 4 June 2007, pp. 1059-1072

Schön, Wolfgang "The Mobility of Companies in Europe and the Organizational Freedom of Company Founders", 3 *European Company and Financial Review* (2006), pp. 122-146

Schön, Wolfgang, "The Free Choice between the Right to Establish a Branch and to Set-up a Subsidiary – a Principle of European Business Law", *European Business Organization Law Review* (2001), pp. 339-364

Schoueri, Luís Eduardo, "The Residence of the Employer in the "183-day Clause" (Article 15 of the OECD's Model Double Taxation Convention)", *Intertax* 1 (1993), pp. 20-29

Schuch, Josef, "EC law requires multilateral tax treaty", *EC Tax Review* 1 (1998), pp. 29-37

Shaviro, Daniel N., "Rethinking Foreign Tax Creditability", 4 *National Tax Journal* 63 (2010), pp. 709-722

Shaviro, Daniel N., ""Why Worldwide Welfare as a Normative Standard in U.S. Tax Policy?" 60 *Tax Law Review* (2006-2007), pp. 155-178

Shaviro, Daniel N. "An Efficiency Analysis of Realization and Recognition Rules under Federal Income Tax", 48 *Tax Law Review*, 1 (1992), pp. 25-81

Shaviro, Daniel N., "Selective Limitations on Tax Benefits", 56 *University of Chicago Law Review*, (1989), pp. 1189-1260

Shiers, Rupert, "Philips Electronics UK Ltd v. HMRC: Host State Restrictions and Use of Host State Losses", in Dennis Weber & Bruno da Silva, *From Marks & Spencer to X Holding: The Future of Cross-Border Group Taxation*, Kluwer Law International BV, The Netherlands (2011), pp. 109-124

Shoup, Carl S. "Taxation of Multinational Corporations", in *The Impact of Multinational Corporations on Development and on International Relations*, UN Technical Papers: Taxation, NY 1974

Sieker, Klaus, "German Tax Review: Court Ruling Increases Appeal of U.S. Dual Resident Corporations", *Tax Notes International,* 16 June 2003, pp. 1107-1109

Silvestre, Rutsel J. Martha, *The Jurisdiction to Tax in International Law – Theory and Practice of Legislative Fiscal Jurisdiction*, Series on International Taxation no. 9, Kluwer Law (1989)

Simontacchi, Stefano "Immovable Property Companies as Defined in Article 13 (4) of the OECD Model, *Bulletin-Tax Treaty Monitor* 1 IBFD (2006), pp. 29-37

Skaar, Aarvid *Permanent Establishment – The Erosion of a Tax Treaty Principle*, Series on International Taxation 13, Kluwer Law Deventer (1991)

Adam Smith, *An Inquiry into the Nature and Causes of the Wealth Of Nations* (1776), available at: http://www.gutenberg.org/files/3300/3300-h/3300-h.htm#link2HCH0031

Snell, Jukka "Non-Discriminatory Tax Obstacles in Community Law, 56 *International & Comparative Law Quarterly*, (2007) pp. 339-370

Snell, Jukka "Who's Got the Power? Free Movement and Allocation of Competences in EC Law" *Yearbook of European Law* (2003), pp. 323-351

Sousa da Câmara, Francisco "How will the Marks & Spencer Ruling Affect Portugal?", *Tax Notes International* (15 May 2006), pp. 619–620

Stahl, Kristina "The Application of the Treaty Non-discrimination Principle in Sweden", 28 *Intertax* 5 Kluwer Law International (2000), pp. 195-199

Staringer, Claus, "Business income of tax groups in tax treaty law", G. Maisto (ed.) *International and EC Tax Aspects of Groups of Companies, EC and International Tax Law Series*, Vol. 4, IBFD (2008), pp. 147-156.

Staringer, Claus "Where Does Foreign Loss Utilization Go in Europe?", *SWI* (2007), pp. 5-11

Staringer, Claus "Tax Treaty Non-Discrimination and EC Freedoms", in Michael Lang et al. (eds.) *Tax Treaty Law and EC Law*, Series on International Taxation, Vol. 30, Kluwer Law International, 1998, pp. 227-246

Stevens, A.J.A. "Het Shell-arrest: een tussenstand", *NTFR-B* 2008/27

Stirling, Andrew "Tax Discrimination: Relief Under Canada's Tax Treaties?" , 59 *Canadian Tax Journal* 2 (2011), pp. 322-330

Strasser Kurt A. & Blumberg, Philip I. "Legal Models and Business Realities of Enterprise Groups – Mismatch and Change", *Osgoode Hall Law School CLPE Research Paper* 18/2009, Vol. 5, no. 3 (2009)

Surrey, Stanley S. "Reflections of the Allocation of Income and Expenses among National Tax Jurisdictions", *Law & Policy in International Business* 10 (1978), pp. 410-418.

Szudoczky, Rita, "*The sources of EU law and their relationships: Lessons for the field of taxation*", doctoral dissertation UvA

Terra, Ben & Wattel, Peter J., *European Tax Law*, Fiscale Handboeken no. 10 2nd edition, Kluwer Detenver (2012)

Ting, Antony, *The Taxation of Corporate Groups under Consolidation: An International Comparison,* Cambridge University Press (2012)

Ting, Antony, "The Unthinkable Policy Option?" 59 *Canadian Tax Journal* 3 (2011) pp. 461-462

Ting, Antony, "Australia's Consolidation Regime: A Road of No Return?" *British Tax Review* 2 (2010) pp. 162-193

Ting, Antony, "Ownership of Companies and the Definition of "Control" under the Consolidation and Controlled Foreign Company Regimes: A Comparison between Australia, New Zealand and the US", 12 *New Zealand Journal of Taxation Law and Policy* 1 (2006), pp. 37-60

Ting, Antony, "Policy and membership requirements for consolidation: a comparison between Australia, New Zealand and the US?" *British Tax Review* 3 (2005) pp. 311-334

Toifl, Gerald, IFA Report Austria "Non-discrimination at the crossroads of international taxation", *Cahiers de droit fiscal international* Vol. 93a (2008), pp. 113-134

Toifl, Gerald, "Can a discrimination in the state of residence be justified by the taxable situation in the state of source?", *EC Tax Review* 4 (1996), pp. 165-167.

Torrione, Henri, "Treatment in Switzerland of Transnational Operating Losses for a Foreign Company with a Swiss Permanent Establishment and for a Swiss Company with a Permanent Establishment Abroad", *Intertax* 12 (1995), pp. 635-648

Tridimas, Takis, *The General Principles of EU Law*, Oxford EC Law Library 2nd edition

Vagts, Detley F. "The Multinational Enterprise: A New Challenge for Transnational Law", *Harvard Law Review* 83 (1969), pp. 769-792.

van den Broek, Hans, *Cross-Border Mergers within the EU: Proposals to Remove the Remaining Tax Obstacles*, Wolf Legal Publishers (2011)

van den Hurk, Hans, "Did the ECJ's decision in Saint-Gobain change international tax law?", 55 *Bulletin for international fiscal documentation* 4 (2001) pp. 152-157

van der Bruggen, Edwin "Unless the Vienna Convention Otherwise Requires: Notes of the Relationship between Article 3 (2) of the OECD Model Convention and Articles 31 and 31 of the Vienna Convention of the Law of Treaties", 43 *European Taxation* 5 (2003), p. 142-156

van der Streek, Jan "The CCCTB Concept of Consolidation and the Rules on Entering a Group", 40 *Intertax* 1 (2012), pp. 24-32

van der Vegt, Pieter, "Country Report Netherlands", in G. Maisto (ed.) *International and EC Tax Aspects of Groups of Companies*, EC and International Tax Law Series, Vol. 4, IBFD (2008), pp. 363-422

van Bruschot, Frank & van Weeghel, Stef, "Fiscal Unity – Profit (Loss) of a Permanent Establishment", *European Taxation* 3, IBFD (1989), pp. 98-99

van Dun, M., "De verdragsrechtelikke positie van de fiscale eenheid", *NTFR* 2012/2578

van Raad, Kees, (ed.), *Materials in International & EC Tax Law*, Vol. I, 2014/2015

van Raad, Kees, "Intercompany Dividends and Non-Discrimination under the OECD Model", in G. Maisto (ed.) *Taxation of Intercompany Dividends under Tax Treaties and EU Law*, EC and International Tax Law Series, Vol. 8, IBFD (2012), pp. 161-168

van Raad, Kees, "Fiscale eenheid: Verdragswoonplaats moet voor moeder en dochtermaatschappij afzonderlijk worden beoordeeld" note BNB 2012/126

van Raad, Kees, "Non-Residents – Personal Allowances, Deduction of Personal Expenses and Tax Rates", *World Tax Journal* June 2010 (IBFD), pp. 154-161

van Raad, Kees, "Operation and Effect of Article 4(1) in Dual Residence Issues under the Updated Commentary", *Bulletin for International Taxation* 5/6 IBFD (2009), pp. 186-190

van Raad, Kees, "Non- discrimination under tax treaties regarding groups of companies", in G. Maisto, (ed.), *International and EC Tax Aspects of Groups of Companies* - EC and International Tax Law Series, Vol. 4, IBFD (2008), pp. 157-174

van Raad Kees, "Nondiscrimination from the Perspective of the OECD Model and the EC Treaty – Structural and Conceptual Issues", in Reuven S. Avi-Yonah, James R. Hines and Michael Lang (ed.), *Comparative Fiscal Federalism: Comparing the European Court of Justice and US Supreme Court's Jurisprudence*, Eucotax Series Vol. 14, (2008), pp. 55-66

van Raad, Kees, "Revisiting a 1981 perspective on EC non-discrimination rules in income tax matters", *British Tax Review* 3 (2006), pp. 318-321

van Raad, Kees, "Five Fundamental Rules in Applying Tax Treaties", in *Planeamento e Concorrência Fiscal Internacional*, Associação Portuguesa de Consultores Fiscais / Fisco (2003), pp. 343-351

van Raad, Kees, note on *Hoge Raad*, 13 November 1996, No. 31 008, *BNB* 1998/47c

van Raad, Kees, "Interpretation and Application of Tax Treaties by Courts", 36 *European Taxation* 1 (1996), pp. 3-7

van Raad, Kees, "The Impact of the EC Treaty's Fundamental Freedoms Provisions on EU Member States' Taxation in Border-crossing Situations – Current State of Affairs", *EC Tax Review* 4 (1995)

van Raad, Kees, "Grenspverschrijdende Fiscale Eenheden: Hoe ver Reikt de Bescherming van non-discriminatiegeboden?" *WFR 1994/1717*

van Raad. Kees, "The 1992 OECD Model Treaty: Triangular Cases", *European Taxation* 9, IBFD (1993), pp. 298-301

van Raad, Kees, "Internationale Aspecten van de Toepassing van Art. 15 WET", *WFR 1989/319*

van Raad, Kees, "Issues in the Application of Tax Treaty Non-Discrimination Clauses", *Bulletin* 8/9 IBFD (1988), pp. 347-351

van Raad, Kees, "Dual Residence", *European Taxation* 8, IBFD (1988), pp. 241-246.

van Raad, Kees, *Non-Discrimination in International Tax Law*, Kluwer Law International, The Hague (1986)

van Raad, Kees, "International Tax Neutrality under the OECD Model Convention and the EC Treaty rules – structural and conceptual issues", ITC Leiden materials on non-discrimination (unpublished).

van Thiel, Servaas, "X Holding: A Denial of Justice" in Dennis Weber & Bruno da Silva, *From Marks & Spencer to X Holding: The Future of Cross-Border Group Taxation*, Kluwer Law International BV, The Netherlands (2011), pp. 51-70,

van Thiel, Servaas and Vascega, "X Holding: Why Ulisses Should Stop Listening to the Siren", 50 *European Taxation* 8 (2010) pp. 334-349

van Thiel, Servaas, "The Direct Income Tax Law of the European Court of Justice: Past, Trends and Future Developments", 62 *Tax Law Review* 1, New York (2008) pp. 143-192.

van Thiel, S. "Justifications in Community Law for Income Tax Restrictions on Free Movement: *Acte Clair* Rules That Can Be Readily Applied by National Courts – Part 1", *European Taxation* 6, IBFD (2008), pp. 279-290

van Thiel, S. "Justifications in Community Law for Income Tax Restrictions on Free Movement: *Acte Clair* Rules That Can Be Readily Applied by National Courts – Part 2", *European Taxation* 7, IBFD (2008), pp. 339-350

van Thiel, S. *EU Case Law on Income Tax*, Part 1, IBFD (2001).

van Thiel, S. "The Prohibition of Income Tax Discrimination in the European Union: What does it Mean?", *European Taxation* 9, IBFD (1994).

van Weeghel, Stef "The Tie-Breaker Rule Revisited: Towards a Formal Criterion?", in Luc Hinnekens and Phillipe Hinnekens (eds.) *A Vision of Taxes Within and Outside European Borders: Festschrift in honor of Prof. Dr. Frans Vanistendael,* Kluwer Law International (2008), pp. 961-964

van Weeghel, Stef, "Thoughts on Territoriality in Relation to Dutch Corporate Tax Reform", in *Liber Amicorum Jacques Malherbe*, Bruylant (2006), pp. 1129-1141

van Weeghel, Stef, *The Improper Use of Tax Treaties*, Issues in International Taxation (1998)

van Weeghel, Stef, "Fiscal Unity and Discrimination", 34 *European Taxation* 8, IBFD (1994), pp. 278-280.

Vanistendael, Frans "Ability to Pay in European Community Law", *EC Tax Review* 2014/3, Kluwer Law International BV, pp. 121-134

Vanistendael, Frans "In defence of the European Court of Justice", *Bulletin for International Taxation* 3 IBFD (2008), pp. 90-98.

Vanistendael, Frans "Does the ECJ have the power of interpretation to build a tax system compatible with the fundamental freedoms?", *EC Tax Review* 2, (2008), pp. 52-66.

Vanistandael, Frans "Group Taxation under domestic law: Common law versus civil law countries", in G. Maisto (ed.) *International and EC Tax Aspects of Groups of Companies*, EC and International Tax Law Series, Vol. 4, IBFD (2008), pp. 45-94

Vanistendael, Frans "The ECJ at the Crossroads: Balancing Tax Sovereignty against the Imperatives of the Single Market", *European Taxation* 9 (2006), IBFD, pp. 413-420.

Vanistendael, Frans "Cohesion: the phoenix rises from his ashes", *EC Tax Review* 4 (2005), pp. 208-222

Vanistendael, Frans "The compatibility of the basic economic freedoms with the sovereign national tax systems of the Member States, *EC Tax Review* 3, (2003), pp. 136-143

Vanistendael, Frans "The Consequences of Schumacker and Wielockx: Two Steps Forward in the Tax Procession of Echternach", 33 *Common Market Law Review* (1996), pp. 255-269

Vann, Richard "Reflections on Business Profits and the Arm's-Length Principle" *Sydney Law School Research Paper* No. 10/127, available at SSRN: http://ssrn.com/abstract=1710945 (acessed on 14 November 2011).

Vann, Richard "A Model Tax Treaty for the Asian-Pacific Region?", (November 8, 2010), *Sydney Law School Research Paper* No. 10/122, available at SSRN: http://ssrn.com/abstract=1705765 (acessed on 14 November 2011)

Vann, Richard "Liable to Tax and Company Residence under Tax Treaties"; G. Maisto (ed.) *Residence of Companies under Tax Treaties and EC Law*, EC and International Tax Law Series, Vol. 5 IBFD (2009) pp. 197-272.

Vann, Richard, "Interpretation of Tax Treaties in New Holland", in H. van Arendonk (et al) *A Tax Globalist: The Search for the Border of International Taxation: Essays in Honour of Maarten J. Ellis*, IBFD on-line (2005)

Vann, Richard J., IFA General Report "Trends in company/shareholder taxation: single or double taxation?", *Cahiers de Droit Fiscal International Volume 88a*, (2003), pp. 21-70

Vermeend, Willem, van der Ploeg, Rick & Timmer, Jam Willem *Taxes and the Economy – A Survey of the Impact of Taxes on Growth, Employment, Investment, Consumption and the Environment*, Edward Elgar (2008),

Vogel, Klaus, *Klaus Vogel On Double Tax Conventions*, Ekkehart Reimer & Alexander Rust (eds.), 4th edition, (2015)

Vogel, K. & Lehner, M., *Doppelbesteurerungsabkommen*, 5th edition, (Munich: Verlag C.H. Beck 2008)

Vogel, Klaus, Tax Treaty News, *Bulletin-Tax Treaty Monitor* 2 (2003), pp. 39-40

Vogel, Klaus "Das oberste osterreichische Steuergericht erklart Verluste bei DBA-Freistellung fur abzugsfahig" *IStR* (2002)

Vogel, Klaus *On Double Taxation Conventions: A Commentary to the OECD, UN and U.S. Model Conventions for the Avoidance of Double Taxation of Income and Capital, With Particular Reference to German Treaty Practice*, third edition (1997)

Vogel, Klaus and Prokisch, Rainer IFA General Report "Interpretation of Double Tax Conventions", *Cahiers de Droit Fiscal International* Vol. 78a, (1993), pp. 55-85

Vogel, Klaus, "Worldwide vs. source taxation of income – A review and re-evaluation of arguments (Part III)", *Intertax* 11 (1988), pp. 393-402

Vogel, Klaus "Worldwide vs. source taxation of income – A review and re-evaluation of arguments (Part II)", *Intertax* 10 (1988), pp. 310-320

Vogel, Klaus "Worldwide v source taxation of income – A review and re-evaluation of arguments (Part I)", *Intertax* 8/9 Kluwer Law International BV (1988), pp. 216-229

Vogel, Klaus "Double Tax Treaties and Their Interpretation", 4 *International Tax & Business Law* 1, (1986), pp. 1-86

Vossestein, Gert-Jan "Exit Restrictions on Freedom of Establishment after Marks & Spencer, *European Business Organization Law Review* 7, pp. 863-878

David A. Ward, "Is There an Obligation in International Law of OECD Member Countries to Follow the Commentaries on the Model?", in Sjoerd Douma & Frank Engelen (eds.) *The Legal Status of the OECD Commentaries, Conflict of Norms in International Tax Law Series*, Vol. 1 IBFD (2008), pp. 73-94

Ward, David A., et al. "A Resident of a Contracting State for Tax Treaty Purposes: A Case Comment on Crown Forest", 44 *Canadian Tax Journal* 2/2 (1996), pp. 408-424

Wassermeyer, Franz "Anmerkung: Ausländische Betriebsstättenverluste: DBA-Frestellung" *IStR* (2001), pp. 754-757

Wathelet, M. "Tax Sovereignty of the Member States and the European Court of Justice: New Trends or Confirmation?", in *a Vision of Taxes within and Outside European Borders; Festchrift in Honor of Prof. Dr. Frans Vanistendael*, ed. Luc Hinnekens & Philippe Hinnekens (Kluwer Law International, 2008), pp. 905-929

Wathelet, M. "Marks & Spencer plc v Halsey: lessons to be drawn", *British Tax Review*, 2, Sweet & Maxwell (2006), pp. 128-134

Wathelet, Melchior "The Influence of Free Movement of Persons, Services and Capital on National Direct Taxation: Trends in the Case Law of the Court of Justice", *Yearbook of European Law* (2001) pp. 1-33.

Wattel, Peter "Non discrimination a la Cour" The ECJ's lack of comparability analysis in direct tax cases", in D. Weber (ed.) *Non-discrimination in tax treaties: selected issues from a global perspective* IBFD, Amsterdam (forthcoming).

Wattel, Peter J., "Argenta Spaarbank: Notional Interest Deduction regime – treatment of foreign permanent establishments is a restriction on the freedom of establishment", *H&I* 2013/12.4

Wattel, Peter J., "Exit Taxation in the EU/EEA Before and After National Grid Indus", *Tax Notes International*, 30 January 2012, pp. 371-379

Wattel, Peter J, Driedubbele noot bij HvJ EG 28 Februari 2008, zaak C-293/06, Deutsche Shell, HvJ EG 15 mei 2008, zaak C-414/06, Lidl Belgium, en HvJ EG 23 oktober 2008, zaak C-157/07, Krankenheim Ruhesitz am Wannsee, *BNB 2009/84 – 86*, pp. 1435-1444

Wattel, Peter J. "Judicial Restraint and Three Trends in the ECJ's Direct Tax Case Law", 62 *Tax Law Review* (2008), pp. 205-219

Wattel, Peter J. "Fiscal Cohesion, Fiscal Territoriality and Preservation of the (Balanced) Allocation of Taxing Power; What is the Difference?", in *The Influence of European Law on Direct Taxation: Recent and Future Developments*, ed. Dennis Weber (EUCOTAX, Kluwer Law International, 2007), pp. 139-156

Wattel, P.J. Note on Case C-446/03, Marks & Spencer II plc v. David Halsey (Her Majesty's Inspector of Taxes), *BNB 2006/72c*

Wattel, Peter J. “Red Herrings in Direct Tax Cases before the ECJ”, 31 *Legal Issues of Economic Integration* 2, Kluwer Law International, pp. 81-95 (2004)

Wattel Peter J. and Marres, Otto “Characterization of Fictitious Income under OECD-Patterned Tax Treaties, *European Taxation* 3 IBFD (2003), pp. 66-79

Wattel, Peter J. “Corporate Tax Jurisdiction in the EU with respect to Branches and Subsidiaries; Dislocation distinguished from Discrimination and Disparity; a Plea for Territoriality”, *EC Tax Review* 4 (2003), pp. 194-202

Wattel, Peter J. “The Schumacker Legacy: A Survey of the Taxation of Cross-Border Employment in Europe”, 35 *European Taxation* 11/12, IBFD (1995), pp. 347-423.

Weber, Dennis “An Analysis of the Past, Current and Future of the Coherence of the Tax System as Justification”, *EC Tax Review* 2015/1, Kluwer Law International BV, pp. 43-54

Weber, Dennis "Abuse of Law in European Tax Law: An Overview and Some Recent Trends in the Direct and Indirect Tax Case Law of the ECJ - part 1" *European Taxation* 7 IBFD (2013), pp. 251-264

Weber, Dennis "Abuse of Law in European Tax Law: An Overview and Some Recent Trends in the Direct and Indirect Tax Case Law of the ECJ - part 2" *European Taxation* 6 IBFD (2013), pp. 313-328

Weber, Dennis “Eight Points as to Why the X Holding Judgment is Incorrect” in Dennis Weber & Bruno da Silva, *From Marks & Spencer to X Holding: The Future of Cross-Border Group Taxation*, Kluwer Law International BV, The Netherlands (2011), pp. 25-50

Weber, Dennis “Refusal of advantages of a cross-border tax consolidation in some situations an unjustified restriction of the freedom of establishment”, *Highlights & Insights in European Taxation*, Kluwer Law International (2010/1.6), pp. 63-69

Weber, Dennis “Is limitation of tax jurisdiction a restriction to free movement? The ECJ should show more respect for the principle of territoriality and for its own basic assumptions” (2007) available at http://www.eatlp.org/uploads/public/Weber%20EATLP%20-%20Helsinki%20-%202007%20-%20Weber.pdf

Weber, Dennis "In Search of a (New) Equilibrium Between Tax Sovereignity and the Freedom of Movement within the EC", 34 *Intertax* 12 (2006), Kluwer Law International BV, pp. 585-

Weber, Dennis, *Tax Avoidance and the EC Treaty Freedoms: A Study of the Limitations under European Law to the Prevention of Tax Avoidance*, EUCOTAX Series on European Taxation, Vol. 11, Kluwer Law International, The Hague (2005)

Weber, Dennis, "The *Bosal Holding* Case: Analysis and Critique" 12 *EC Tax Review* 4 (2003), pp. 220-230

Weber, Dennis, 'The Proposed EC Interest and Royalty Directive', 9 *EC Tax Review* 1 (2000), pp. 15-30

Weisbach, David A., "The Irreductible Complexity of Firm-Level Income Taxes: Theory and Doctrine in Corporate Tax" 60 *Tax Law Review* 4 (2007), pp. 215-262

Weisbach, David. A, "Line Drawing, Doctrine, and Efficiency in the Tax Law", 84 *Cornell Law Review*, (1998-1999), pp. 1627-1681

Wheeler, Joanna, "The Missing Keystone of Income Tax Treaties", 3 *World Tax Journal* 2 IBFD (2011)

Wheeler, Joanna, IFA General Report "Conflicts in the Attribution of Income to a Person" , *Cahiers de Droit Fiscal International*, Vol. 92b (2007), pp. 17-58

Whitehead, Simon, "Cross-border Group Relief Post Marks & Spencer", *Tax Planning International*, May 2008, BNA, pp. 9-12

Wiman, Bertil, "Cross-Border Loss Relief in Europe – The Case of Group Contributions", in Luc Hinnekens & Philippe Hinnekens (eds.) *a Vision of Taxes within and Outside European Borders; Festchrift in Honor of Prof. Dr. Frans Vanistendael*, Kluwer Law International (2008), pp. 971–987

Wiman, Bertil IFA Report Sweden "Group Taxation", *Cahiers de droit fiscal international,* 89b (2004), pp. 633-648

Wiman, Bertil, "Equalizing the Income Tax Burden a Group of Companies", 28 *Intertax* 10 (2000), pp. 363-378

Wiman, Bertil, "Swedish tax law and discrimination – some observations", *EC Tax Review* 2 (1997), pp. 101-107

Wimpissinger, Christian, "Cross-border transfer of losses, the ECJ does not agree with Advocate General Sharpston" *EC Tax Review* 4 (2008), pp. 173-181

Winandy, Jean-Pierre and Richter, Dirk, IFA Luxembourg Report "Non-discrimination at the crossroads of international taxation", *Cahiers de droit fiscal international* 93a (2008), pp. 373-392

Wouters, Jan, "The Case-Law of the European Court of Justice on Direct Taxes: Variations upon a Theme", *Maastricht Journal for European and Comparative Law* 1 (1994), pp. 179-220

Xavier, Alberto, *Direito Tributario Internacional*, 2a edicao Actualizada, Almedina (2007)

Zalasinski, Adam, "The Limits of the EC Concept of 'Direct Tax Restriction on Free Movement Rights', the Principles of Equality and Ability to Pay, and the Interstate Fiscal Equity", 37 *Intertax* 5 (2009) Kluwer Law International BV, pp. 282-297

Zolt, Eric, "The Uneasy Case for Uniform Taxation", 16 *Virginia Tax Review*, (1997), pp. 39-109

OECD Documents

OECD *Model Tax Convention on Income and on Capital* (Paris: OECD 2014)

OECD Report on *Corporate Loss Utilisation Through Aggressive Tax Planning* (Paris: OECD 2011)

OECD *Transfer Pricing Guidelines for Multinational Enterprises and Tax Administrations* (Paris: OECD 2010)

OECD *discussion draft on the application and interpretation of Article 24 (non-discrimination)* of 3 November 2007

OECD report on *The Application of the OECD Model Tax Convention to Partnerships* (Paris: OECD 1999)

OECD *Model Tax Convention: Four Related Studies ("Triangular Cases")*, Issues in International Taxation no. 4, (OECD Paris: 1992)

OECD, *International Tax Avoidance and Evasion, Double Taxation Conventions and the Use of Base Companies*, Issues in International Taxation no. 1, (Paris: OECD 1987)

OECD *Thin Capitalization Report* (Paris: OECD 1986)

FC/WP4 (58) 2 of 29 March 1958, Working Party no. 4 of the Fiscal Committee

FC/WP4 (58) 1, of 19 February 1958, Working Party no. 4 of the Fiscal Committee

FC/WP42/ (57) 2, of 10 May 1957, Working Party no. 4 of the Fiscal Committee

FC/WP4/ (57) 1, 11 January 1957, Working Party no. 4 of the Fiscal Committee

Table of Cases

Court of Justice

ECJ, 20 February 1979, Case 120/78, *Rewe-Zentral AG v Bundesmonopolverwaltung für Branntwein ("Cassis de Dijon")*

ECJ 9 February 1982, C-270/80, *Polydor Limited and RSO Records Inc. v Harlequin Records Shops Limited and Simons Records Limited*

ECJ 5 May 1982, C-15/81, *Gaston Schul Douane Expediteur BV v Inspecteur der Invoerrechten en Accijnzen, Roosendaal*

ECJ, 28 January 1986, Case C-270/83, *Commission v. France ("Avoir Fiscal")*

ECJ, 27 September 1988, Case C-81/87, *Daily Mail*

ECJ, 5 December 1989, Case C-3/88, *Commission v Italy*

ECJ 8 May 1990, Case C-175/88, *Biehl v Administration des Contributions du Gran-Duche de Luxembourg*

ECJ, 11 June 1991, C-300/89, C*ommission of the European Communities v Council of the European Communities*

ECJ, 28 January 1992, Case C-204/90, *Hanns-Martin Bachmann v Belgian State*,

ECJ, 28 January 1992, Case C-300/90, *Commission of the European Communities v Kingdom of Belgium*, (1990)

ECJ 26 January 1993, Case C-112/91, *Werner v Finanzamt Aachen-Innenestadt*,

ECJ, 13 July 1993, Case C-330/91 *The Queen v Inland Revenue Commissioners, ex parte Commerzbank AG* (1993)

ECJ 12 April 1994, Case C-1/93, *Halliburton Services BV v Staatssecretaris van Financiën*,

ECJ 14 July 1994, C-32/93 *Carole Louise Webb v EMO Air Cargo (UK) Ltd*

ECJ 14 February 1995, Case C-279/93, *Finanzamt Koln-Altstadt v Roland Schumacker*

ECJ, 11 August 1995, Case C-80/94, *G. H. E. J. Wielockx v Inspecteur der Directe Belastingen*

ECJ 14 November 1995, Case C-484/93 *Svensson and Gustavsson v Ministre du Logement et de l'Urbanisme*

ECJ, 30 November 1995, Case C-55/94, *Gebhard v Consiglio dell' Ordine degli Avvocati e Procuratori di Milano* (1995)

ECJ 27 June 1996, Case C-107/94, *Asscher v Staatssecretaris van Financien*

ECJ 15 May 1997, Case C-250/97, *Futura Participations SA and Singer v Administration des contributions*

ECJ 17 July 1997, Case C-28/95 *Leur-Bloem* v *Inspecteur de Belastingsdienst/Ondernemingen Amsterdam 2*

ECJ, 12 May 1998, Case C-336/96, *Mr and Mrs Robert Gilly v Directeur des services fiscaux du Bas-Rhin*

ECJ, 16 July 1998, Case C-264/96, *Imperial Chemical Industries pls v K. Hall Colmer (Her Majesty's Inspector of Taxes)*

ECJ 9 March 1999, Case C-212/97 *Centros Ltd v Erhvervs-og Selskabsstyrelsen*

ECJ 8 July 1999, Case C-254/97, *Société Baxter, B. Braun Médical SA, Société Fresenius France and Laboratoires Bristol-Myers-Squibb SA v Premier Ministre, Ministère du Travail et des Affaires sociales, Ministère de l'Economie et des Finances and Ministère de l'Agriculture, de la Pêche et de l'Alimentation*

ECJ 14 September 1999, Case C-311/97, *Royal Bank of Scotland plc v Elliniko Dimosio (Greek State*)

ECJ 21 September 1999, Case C-307/97 *Compagnie de Saint-Gobain Zweigniederlassung Deutschland v Finanzamt Aachen-Innenstadt*

ECJ, 26 October 1999, Case C-294/97 *Eurowings Luftverkhers AG v Finanzamt Dortmund-Unnam*

ECJ 28 October 1999, Case C-55/98, *Skatteministeriet v Bent Vestergaard*

ECJ, 18 November 1999, Case C-200/98, *X AB and YAB v. Riksskatteverket*

ECJ 13 April 2000, Case C-241/98, C. *Baars v Inspecteur der Belastingdienst Particulieren/Ondernemingen Gorinchem*

ECJ 6 June 2000, Case C-35/98, *Staatssecretaris van Financien v Verkooijen*

ECJ 26 September 2000, Case C-478/98, *Commission of the European Communities v Kingdom of Belgium*

ECJ 14 December 2000, Case C-110/99 *Emsland-Stärke GmbH v Hauptzollamt Hamburg-Jonas*

ECJ, 14 December 2000, Case C-141/99, *Algemene Maaschappij voor Investering en Dienstverneling NV (AMID) v Belgian State*

ECJ 8 March 2001, Joined Cases C-397/98 and C-410/98 *Metallgesellschaft Ltd. v. The Commissioners of Inland Revenue and Hoechst v. Inland Revenue Commissioners*

ECJ, 12 September 2002, Case C-431/01, *Philippe Mertens v Belgium State*

ECJ, 3 October 2002, Case C-136/00, *Rolf Dieter Danner*

ECJ, 21 November 2002, Case C-436/00, *X and Y v Riksskatteverket*

ECJ 12 December 2002, Case C-324/00, *Lankhorst-Hohorst GmbH v Finanzamt Steinfurt*

ECJ, 12 December 2002, Case C-385/00, *F.W.L. de Groot v Staatssecretairs van Financien*

ECJ 26 June 2003, Case C-422/01, *Försäkringsaktiebolaget Skandia (publ) and Ola Ramstedt v Riksskatteverket*

ECJ, 18 September 2003, Case C-168/01, *Bosal Holding BV v Staatssecretaris van Financien*

ECJ, 11 December 2003, Case C-364/01, *Barbier v Inspecteur van de Belastingdienst Particulieren/Ordernemingen buitlenland te Heerlen*

ECJ 4 March 2004, Case C-334/02, *Commission of the European Communities v French Republic*

ECJ 11 March 2004, Case C-9/02, *Hughes de Lasteyrie du Saillant v Ministère de l'Économie, des Finances et de l'Industrie*

ECJ 1 July 2004, Case C-169/03, *Florian W. Wallentin v Riksskattteverket*

ECJ 15 July 2004, Case C-315/02, *Anneliese Lenz v Finanzlandesdirektion für Tirol*

ECJ 7 September 2004, Case C-334/02, *Commission v French Republic*

ECJ 7 September 2004, Case C-319/02, *Petri Manninen*

ECJ 10 March 2005, Case C-39/04*, Laboratoires Fournier SA v. Direction des vérifications Nationales et Internationales*

ECJ, 12 July 2005, ECJ 12 July 2005, Case C-403/03 *Egon Schempp v Finanzamt Munchen V*

ECJ 8 September 2005, Case C-512/03, *J. E. J. Blanckaert v Inspecteur van de Belastingdienst/Particulieren/Ondernemingen buitenland te Heerlen*

ECJ 13 December 2005, Case C-446/03, *Marks & Spencer plc v David Halsey (Her Majesty's Inspector of Taxes)*

ECJ, 21 February 2006, Case C-152/03, *Hans-Jurgen and Monique Ritter-Coulais v Finanzamt Germersheim*

ECJ 23 February 2006, Case C-471/04, *Finanzamt Offenbach am Main-Land v Keller Holding GmbH*

ECJ 7 September 2006, case C-470/04, *N v Inspecteur van de Belastingdienst Oost/kantoor Almelo*

ECJ, 12 September 2006, Case C-196/04, Case C-196/04, *Cadbury Schweppes and Cadbury Schweppes Overseas v Commissioners of Inland Revenue*

ECJ 14 September 2006, Case C-386/04, *Centro di Musicologia Walter Stauffer v Finanzamt München für Körperschaften*

ECJ, 19 September 2006, Case C-356/04, *Lidl Belgium GmbH & Co KG v Etablissementen Franz olruyt NV*

ECJ 14 November 2006, Case C-513/04, *Mark Kerckhaert and Bernadette Morres v Belgische Staat*

ECJ 12 December 2006, Case C-374/04, *Test Claimants in Class IV of the ACT Group Litigation v Commissioners of Inland Revenue*

ECJ 12 December 2006, Case C-446/04, *Test Claimants in the FII Group Litigation v. Commissioners of Inland Revenue*

ECJ, 14 December 2006, Case C-170705, *Denkavit Internationaal BV and Denkavit France SARL v Ministre de l'Économie, des Finances et de l'Industrie*

ECJ 25 January 2007, Case C-329/05, *Finanzamt Dinslaken v Gerold Meindl*

ECJ 15 February 2007, Case C-345/04, *Centro Equestre da Lezíria Grande Lda v Bundesamt fur Finanzen*

ECJ 6 March 2007, Case C-292/04, *Wienand Meilicke, Heidi Christa Weyde and Marina Stöffler v Finanzamt Bonn-Innenstadt*

ECJ 13 March 2007, Case C-524/04, *Test Claimants in the Thin Cap Group Litigation v Commissioners of Inland Revenue*

ECJ 29 March 2007, Case C-347/04, *Rewe Zentralfinanz eG v Finanzamt Köln-Mitte*

ECJ 14 September 2006, Case C-386/04, *Centro di Musicologia Walter Stauffer v Finanzamt München für Körperschaften*

ECJ, 18 July 2007, Case C-231/05, *Oy AA*

ECJ 18 July 2007, Case C-182/06, *État du Grand Duchy of Luxemburg v Hans Ulrich Lakebrink and Katrin Peters-Lakebrink*

ECJ 11 October 2007, Case C-451/05, *Européene et Luxembourgoise d'investissements SA (ELISA) v Directeur général des impots, Ministére public*

ECJ, 8 November 2007, Case C-379/05, *Amurta SGPS v Inspecteur van de Belastingdienst/Amsterdam*,

ECJ 6 December 2007, Case C-298/05, *Columbus Container Services BVBA & Co. v Finanzamt Bielefeld-Innenstadt*

ECJ, 17 January 2008, Case C-105/07, *Lammers & Van Cleeff NV v Belgische Staat*

ECJ 16 October 2008, Case C-527/06, *R.H.H. Renneberg v Staatssecretaris van Financiën*

ECJ 4 December 2008, Case C-330/07, *Jobra Vermögensverwaltungs-Gesellschaft mbH v Finanzamt Amstetten Melk Scheibbs*

ECJ 18 December 2007, *Skatteverket v A*

ECJ, 28 February 2008, Case C-293/06, *Deutsche Shell GmbH v Finanzamt für Grossunternehmen in Hamburg*

ECJ 15 May 2008, Case C-416/06, *Lidl Belgium GmbH & Co. KG v Finanzamt Heilbronn*

ECJ 20 May 2008, Case C-194/06, *Staatssecretaris van Financiën v Orange European Smallcap Fund NV*

ECJ 11 September 2008, C-43/07 *Arens-Sikken*

ECJ, 23 October 2008, Case C-157/07, *Finanzamt für Körperschaften III in Berlin v Krankenheim Ruhesitz am Wannsee-Seniorenheimstatt GmbH*

ECJ 27 November 2008, Case C-418/07, *Société Papillon v Ministére du Budget, des Comptes Publics et de la Fonction Publique*

ECJ 22 January 2009, Case C-377/07, *Finanzamt Speyer-Germersheim v STEKO Industriemontage GmbH*

ECJ 29 January 2009, Case C-318/07 *Heine Persche v Finanzamt Ludenscheid*, ECR I-359

ECJ, 23 April 2009, Case C-460/07, *Sandra Puffer v Unabhängiger Finanzsenat, Außenstelle Linz*

Similarly ECJ 4 June 2009, Joined Cases C-439/07 and C-499/07, *Belgische Staat v KBC Bank NV (C-439/07) and Beleggen, Risicokapitaal, Beheer NV v Belgische Staat (C-499/07)*

ECJ 11 June 2009, Joined cases C-155/08 and C-157/08, *X and E.H.A. PAssenheim-van Schoot v Staatssecretaris van Financien*

ECJ 18 June 2009, Case C-303/07, *Aberdeen Property Fininvest Alpha Oy*

ECJ 16 July 2009, Case C-128/08, *Jacques Damseaux v Belgian State*

ECJ 17 September 2009, Case C-182/08, *Glaxo Wellcome GmbH & Co. KG v Finanzamt Munchen II*

ECJ 15 October 2009, Case C-35/08, *Grundstücksgemeinschaft Busley and Cibrian Fernandez v Finanzamt Stuttgart-Körperschaften*

ECJ 19 November 2009, Case C-540/07, *Commission of the European Communities v Italian Republic*

CJ, 21 January 2010, Case C-311/08, *Société de Gestion Industrielle (SGI) v Belgian State*

CJ 25 February 2010, Case C-337/08, *X Holding B.V. v Staatssecretaris van Financiën*

CJ, 18 March 2010, Case C-440/08, *F. Gielen v Staatssecretaris van Financien*

CJ 1 June 2010, Joined Cases *José Manuel Blanco Pérez and María del Pilar Chao Gómez v Consejería de Salud y Servicios Sanitarios (C-570/07) and Principado de Asturias (C-571/07)*

CJ, 3 June 2010, Case C-487/08, *European Commission v Kingdom of Spain*

CJ 1 July 2010, Case C-233/09, *Gerhard Dijkman, Maria Dijkman-Lavajeile v Belgische Staat*

CJ 21 October 2010, Case C-81/09, *Idryma Typou AE v Ypourgos Typou kai Meson Mazikis Enimerosis*

CJ 28 October 2010, Case C-72/09, *Établissements Rimbaud SA v Directeur général des impôts and Directeur des services fiscaux d'Aix-en-Provence*

CJ 22 December 2010, Case C-287/10, *Tankreederei I SA v Directeur de l'administration des contributions directes*

CJ 10 February 2011, Case Joined cases C-436/08 and C-437/08, *Haribo Lakritzen Hans Riegel BetriebsgmbH and Österreichische Salinen AG v Finanzamt Linz*

CJ, 21 July 2011, Case C-397/09, *Scheuten Solar Technology GmbH v Finanzamt Gelsenkirchen-Süd*

CJ 15 September 2011, Case C-310/09, *Ministre du Budget, des Comptes publics et de la Fonction publique v Accor SA*

CJ 6 October 2011, Case C-493/09*, European Commission v Portuguese Republic*

CJ 20 October 2011, Case C-284/09, *European Commission v Republic of Germany*

CJ 29 November 2011, Case C-371/10 *National Grid Indus BV v Inspecteur van de Belastingdienst Rijnmond / kantoor Rotterdam*

CJ 1 December 2011, Case C-253/09, *European Commission v Republic of Hungary*

CJ 10 May 2012, Case C-39/12, *European Commission v Republic of Estonia*

CJ 10 May 2012, Joined Cases C-338/11 to C-347/11, *Santander Asset Management SGIIC SA v Directeur des résidents à l'étranger et des services généraux and Santander Asset Management SGIIC SA and Others v Ministre du Budget, des Comptes publics, de la Fonction publique et de la Réforme de l'État*

CJ 5 July 2012, Case C-318/10, *Société d'investissement pour l'agriculture tropicale SA (SIAT) v Belgian State*

CJ 19 July 2012, Case C-48/11, *Veronsaajien oikeudenvalvontayksikkö v A Oy*

CJ 19 July 2012, Case C-31/11, *Marianne Scheunemann v Finanzamt Bremerhaven*

CJ 6 September 2012, Case C-18/11, *The Commissioners for Her Majesty's Revenue & Customs v Philips Electronics UK Ltd*

CJ 6 September 2012, Case C-38/10, *European Commission v Portuguese Republic*

CJ, 13 November 2012, Case C-35/11, *Test Claimants in the FII Group Litigation v Commissioners of Inland Revenue, The Commissioners for Her Majesty's Revenue & Customs*

CJ, 21 February 2013, Case C-123/11, *A Oy*

CJ 28 February 2013, C-168/11, *Manfred Becker, Christa Becker v Finanzamt Heilbronn*

CJ 25 April 2013, Case C-64/11, *European Commission v Kingdom of Spain*

CJ, 4 July 2013, Case C-350/11 *Argenta Spaarbank NV v Belgische Staat*

CJ 18 July 2013, Case C-261/11, *European Commission v Kingdom of Denmark*

CJ, 3 October 2013, Case C-282/12, *Itelcar – Automoveis de Aluguer, Lda, v Fazenda Publica*

CJ 17 October 2013 Case C-181/12, *Yvon Welte v Finanzamt Velbert*

CJ 7 November 2013, Case C-322/11, *K*

CJ, 5 February 2014, C-385/12, *Hervis Sport- és Divatkereskedelmi Kft. v Nemzeti Adó- és Vámhivatal Közép-dunántúli Regionális Adó Főigazgatósága*

CJ 1 April 2014, Case C-80/12, *Felixstowe Dock and Railway Company Ltd and others v The Commissioners for Her Majesty's Revenue & Customs*

CJ 10 April 2014, Case C-190/12, *Emerging Markets Series of DFA Investment Trut Company v Dyrektor Izby Skarbowej w Bydsgoszczy*

CJ 12 June 2014, Joined Cases C-39/13, C-40/13 and C-41/13, *Inspecteur van de Belastingdienst Noord/kantoor Groningen v SCA Group Holding BV (C-39/13), X AG, X1 Holding GmbH, X2 Holding GmbH, X3 Holding BV, D1 BV, D2 BV, D3 BV, v Inspecteur van de Belastingdienst Amsterdam (C-40/13) and Inspecteur van de Belastingdienst Holland- Noord/kantoor Zaandam v MSA International Holdings BV, MSA Nederland BV (C-41/13)*

CJ 17 July 2014, Case C-48/13, *Nordea Bank Danmark A/S v Skatteministeriet*

CJ 11 September 2014, Case C-47/12, *Kronos International Inc. v Finanzamt Leverkusen*

CJ 18 December 2014, Case C-133/13, *Staatssecretaris van Economische Zaken, Staatssecretaris van Financien v Q*

CJ 3 February 2015, Case C-172/13, *European Commission v UK*

CJ 21 May 2015 Case C-657/13, *Verder LabTec GmbH & Co. KG v Finanzamt Hilden*

CJ, 10 June 2015, Case C-686/13, *X AB v Skatteverket*

CJ 18 June 2015, Case C-9/14, *Staatssecretaris van Financiën v D. G. Kieback*

CJ, 2 September 2015, Case C-386/14, *Groupe Steria SCA v Ministere des Finances et des Comptes publics*

CJ 17 September 2015, C-589/13 *F.E. Familienprivatstiftung Eisenstadt v Unabhängiger Finanzsenat, Außenstelle Wien*

CJ 17 September 2015, *Joined Cases J. B. G. T. Miljoen (C-10/14) X (C-14/14) and Société Générale SA (C-17/14) v Staatssecretaris van Financiën*

CJ, 6 October 2015, Case C-66/14, *Finanzamt Linz v Bundesfinanzgericht, Außenstelle Linz*

Opinions AG

Opinion of AG Mancini delivered on 16 October 1985 in Case C-270/83, *Commission v French Republic* ("Avoir Fiscal")

Opinion of AG La Pergola delivered on 14 December 1999, case C-35/98, *Staatssecretaris van Financien v Verkooijen*

Opinion of AG Kokott delivered on 18 March 2004 in case C-319/02, *Petri Manninen*

Opinion of AG Maduro delivered on 7 April 2005 in case C-446/03, Case C-446/03, *Marks & Spencer plc v David Halsey (Her Majesty's Inspector of Taxes)*

Opinion of AG Geelhoed delivered on 23 February 2006 in case C-374/04 *Test Claimants in Class IV of the ACT Group Litigation*

Opinion of AG Léger delivered on 2 May 2006 in case C-196/04, *Cadbury Schweppes and Cadbury Schweppes Overseas v Commissioners of Inland Revenue*

Opinion of AG Maduro delivered on 31 May 2006, in case C-347/04 *Rewe Zentralfinanz eG v Finanzamt Koln-Mitte*

Opinion of AG Geelhoed delivered on 29 June 2006, in case C-524/04 *Test Claimants in the Thin Cap Group Litigation*

Opinion of AG Maduro delivered on 31 May 2006 in case C-347/04, *Rewe Zentralfinanz eG v Finanzamt Köln-Mitte*

Opinion of AG Kokott delivered on 12 September 2006 in case C-231/05, *Oy AA*

Opinion of AG Mengozzi delivered on 7 June 2007 in case C-379/05, *Amurta SGPS v Inspecteur van de Belastingdienst*

Opinion of AG Sharpston delivered on 8 November 2007, in case C-293/06 *Deutsche Shell GmbH v Finanzamt für Großunternehmen in Hamburg*

Opinion of AG Sharpston delivered on 14 February 2008 in case C-356/04, *Lidl Belgium GmbH & Co KG v Etablissementen Franz olruyt NV*

Opinion of AG Kokott delivered on 18 September 2008, in case C-282/07 *État belge - SPF Finances v Truck Center SA*

Opinion of AG Kokott delivered on 16 July 2009 in case C-540/07 *Commission of European Communities v Italian Republic*

Opinion of AG Kokott delivered on 10 September 2009 in case C-311/08 *Société de Gestion Industrielle (SGI) v Belgian State*

Opinion of AG Kokott delivered on 19 November 2009 in case C-337/08, *X Holding B.V. v Staatssecretaris van Financiën*

Opinion of AG Kokott delivered on 8 September 2011 in case C-371/10, *National Grid Indus BV v Inspecteur van de Belastingdienst Rijnmond / kantoor Rotterdam*

Opinion of AG Kokott, delivered on 21 November 2011, in Case C-498/10 *X NV v Staatssecretaris van Financiën*

Opinion of AG Kokott delivered on 19 April 2012, in case C-18/11 *The Commissioners for Her Majesty's Revenue & Customs v Philips Electronics UK Ltd*

Opinion of AG Mengozzi, delivered on 28 June 2012, in case C-38/10 *European Commission, v Portuguese Republic*

Opinion of AG Kokott delivered on 19 July 2012 in case C-123/11, *A Oy*

Opinion of AG Mengozzi delivered on 6 November 2012, in case C-190/12, *Emerging Markets Series of DFA Investment Trust Company v Dyrektor Izby Skarbowej w Bydsgoszczy*

Opinion of AG Mengozzi delivered on 21 March 2013 in case C-322/11, *K*

Opinion of AG Kokott delivered on 5 September 2013 in Case C-385/12 *Hervis Sport- és Divatkereskedelmi Kft v Nemzeti Adó- és Vámhivatal Kozép-dunántúli Regionális Adó Foigazgatóság*

Opinion of AG Kokott delivered on 27 February 2014 in Joined Cases C-39/13, C-40/13 and C-41/13, *Inspecteur van de Belastingdienst Noord/kantoor Groningen v SCA Group Holding BV (C-39/13), X AG, X1 Holding GmbH, X2 Holding GmbH, X3 Holding BV, D1 BV, D2 BV, D3 BV, v Inspecteur van de Belastingdienst Amsterdam (C-40/13) and Inspecteur van de Belastingdienst Holland- Noord/kantoor Zaandam v MSA International Holdings BV, MSA Nederland BV (C-41/13)*

Opinion of AG Kokott delivered on 13 March 2014 in case C-48/13, *Nordea Bank Danmark A/S v Skatteministeriet*

Opinion of AG Kokott delivered on 23 October 2014 in case C-172/13, *European Commission v United Kingdom of Great Britain and Northern Ireland*

Opinion of AG Kokott delivered on 22 January 2015 in case C-686/13, *X AB v Skatteverket*

Opinion of AG Kokott delivered on 16 April 2015 in case C-66/14, *Finanzamt Linz v Bundesfinanzgericht, Außenstelle Linz*

Opinion of AG Kokott delivered on 11 June 2015 in case C-386/14, *Groupe Steria SCA v Ministere des Finances et des Comptes publics*

EFTA Court

EFTA Court, 23 November 2004, Case E-1/04, *Fokus Bank ASA v The Norwegian State, represented by Skattedirektoratet (The Directorate of Taxes)*

National case-law:

US Court of Appeals in *Commissioner v Manus Muller & Co.*, of 1 July 1935

Commission of Inland Revenue v United Dominions Trust, 1973 NZTC 61,028.

Australian High Court case *Walker v Wimborne* (1976) 3 ACLR

Swedish Supreme Court case RA 1987 ref. 158

Hoge Raad case no. 24738, of 29 June 1988

Société Royal, Cour de Cassation, Case 88-154 44, 21 December 1990

Regina v Inland Revenue Commissioners Ex p. Commerzbank, [1991] S.T.C. 271, 12 April 1991

Bundesfinanzhof, Case I B 72/91, 13 November 1991

Swedish Supreme Court, RA 1993 ref. 91 I

Finish Supreme Administrative Court*, KHO:1992:536-537,* of 18 February 1992

Hoge Raad, case no. 27843 of 23 December 1992

Hoge Raad case no. 28.260 of 17 February 1993

Hoge Raad, case no. 27764 of 16 March 1994

Hoge Raad, case no. No. 31 008, of 13 November 1996

Swedish Supreme Court case RA 1996 ref. 69

Swedish Supreme Court RA 1998 ref. 49

Bundesfinanzhof, Case I R 54/96, 22 April 1998, *DStRE* (1998)

Court Administrative d'appel de Nantes, Case 97NT01922, of 13 March 2001

UK Special Commissioners, 26 November 2002, *Marks & Spencer plc (Apellant) and the David Halsey (HM Inspector of Taxes) (Respondent)*

Hoge Raad case no. 37073, of 20 December 2002

UnionBanCalCorp v Comr of Internal Revenue (2002) 5 ITLR, 912, 2000-2 USTC (CCH) P50

Union of India and another v. *Azadi Bachao Andolan and another*, (2003) 6 ITLR pp. 223-274

Bundesfinanzhof case I R 6/99, of 29 January 2003

KHO:2003:33 of 17 June 2003

Société Andritz Sprout Bauer, Conseil d'Etat no. 233894 (Section du Contentieux 8eme sous-section), of 30 December 2003

NEC Semi-Conductors Limited and other test claimants v The Commissioners of Inland Revenue, [2003] EWHC 2813 (Ch), 24 November 2003

Société Andritz Sprout Bauer, Conseil d'Etat no. 233894 (Section du Contentieux 8eme sous-section). 30 December 2003, 6 ITLR, pp. 604-641

Supreme Administrative Court case A Oy and B Oy, *KHO:2004:65*, of 22 June 2004, 7 *International Tax Law Reports*, pp. 288-323

Recurso Especial no. 426.945 - PR (2002/0043098-0), 22 June 2004

Recurso Especial no 602.725 - PR (2003/0195527-8), 3 August 2004.

Bundesfinanzhof, case II R 51/03 of 10 March 2005, *IStR* (2005)

UBS AG v Revenue and Customs Commissioners, [2005] S.T.C. 589, 7 June 2005

Mechtem Canada Inc. v Deputy Commissioner of Income Tax, Income Tax Appellate Tribunal of Mumbai, 30 September 2005

Assistant Director of Income Tax v Green Emirate Shipping & Travels, (2005) 9 ITLR pp. 1-10

Abdul Razak A Meman v CIT (International Taxation Mumbai), Akila A Meman v CIT (International Taxation Mumbai), Manish Bhatia v CIT (International Taxation Mumbai) 9 ITLR (2005), pp. 148-174

Boake Allen Limited and other test claimants v The Commissioners for Her Majesty's Revenue and Customs [2006] EWCA Civ 25, 31 January 2006

UBS AG v Revenue and Customs Commissioners, [2006] EWHC 117, 7 February 2006

US Court of Appeals for the 7th Circuit *Square D Co. and Subsidiaries v. CIR,* 04-4302, 13 February 2006, 438, F3d739

Verwaltungsgerischshof, Case 2005/14/0036 of 16 February 2006

UK High Court of Justice, *Marks and Spencer PLC* and David Halsey (HM Inspector of Taxes) [2006] EWCH 811 (Ch), 10 April 2006

Tribunal Administratif du Grand-Duché de Luxembourg, Case no. 19717 and 29624, of 23 October 2006

UBS AG v Revenue and Customs Commissioners, [2007] EWCA Civ 119, 21 February 2007, 9 ITLR

Cour Administrative du Grand-Duché de Luxembourg, Case 21979, of 19 April 2007

Boake Allen Limited and others (Appellants) v Her Majesty's Revenue and Customs (Respondents), [2007] UKHL 25, 23 May 2007

Cour Administrative d' Appel de Paris, Case no. 06PA03370 of 6 December 2007

Supreme Administrative Court, *KHO 2007/3378 (92)*, 31 December 2007

Automated Securities Clearance Inc v Income Tax Officer (ITA No. 1758/PN/2004) of 10 September 2008

DaimlerChrysler India Private Limited v. Deputy Commissioner of Income Tax ITA no. 968/PN/03 (2009)

UK First Tier Tribunal *Marks and Spencer PLC and The Commissioners for Her Majesty's Revenue and Customs* 23 February 2009

Gambro AB case of 11 March 2009

UK First-Tier Tribunal (tax) Decision, 2 April 2009, TC 00005 *Marks & Spencer plc (Apellants) and the Commissioners for HMRC (Respondents)*

UK *Philips Electronic UK Limited (Appellants) v. The Commissioners for Her Majesty's Revenues & Customs* 2009 UKFTT 226 (TC)

Tribunal Supremo *Appeal no. 871/2003* of 1 October 2009

Hoge Raad no. 08/00900, of 2 October 2009, *BNB* 2010/22

Upper Tribunal Tax and Chancery Chamber *The Commissioners for Her Majesty's Revenue and Customs and Marks and Spencer PLC*, [2010] UKUT 213 (TCC), 1 March 2010

FCE Bank plc v Revenue and Customs Commissioners, [2010] UKFTT 136 (TC), of 1 April 2010, 12 *International Tax Law Reports*, pp. 962-995

BFH, 9 June 2010, I R 100/07, *IStR* pp. 670-672

Additional Opinion of AG Wattel of 7 July 2010 in Hoge Raad case no. 43484 bis, *X Holding BV v Secretariat of Financien*

Bundesfinanzhof, Case I R 6/09, 8 September 2010, 13 *International Tax Law Reports*, pp. 646-668

Administrative Court of Gothenburg, *Volvo Bussar AB*, no. 2184-10 of 12 October 2010

Hoge Raad , case no. 43 484 bis, of 7 January 2011, *BNB 2011/96*

Tax Court of Canada *Saipem UK Limited v The Queen*, [2011 TCC 25], 13 International Tax Law Reports pp. 454-481

Bundesfinanzhof Case I R 54, 55/10, 9 February 2011, *13 International Tax Law Reports*, pp. 839-868

Federal Court of Appeal Canada *Saipem UK Limited v The Queen*, 6 September 2011 [2011 FCA 243]

FCE Bank plc v Revenue and Customs Commissioners [2011] UKUT 420 (TCC), of 13 October 2011, 14 *International Tax Law Reports*, pp. 319-332

Bundesfinanzhof Case I R 30/08, 7 December 2011

Shri Rajjev Sureshba Gajwani, v Assistan Commissioner of Income Tax, ITA no. 3111/Ahd/2007, 4 March 2011

Tribunal Supremo, *Appeal no. 5871/2006* of 17 March 2011

UK Court of Appeal, *The Commissioners for Her Majesty's Revenue and Customs and Marks and Spencer PLC*, [2011] EWCA Civ 1156, 14 October 2011

The Felixstowe Dock and Railway Company Ltd & Ors v Revenue & Customs [2011] UKFTT 838 (TC), of 19 December 2011

Hoge Raad case no. 10/05383 of 3 February 2012

Tribunal Supremo, Appeal no. 4517/1997, of 15 July 2002

Hoge Raad, case no. 10/05268, of 21 September 2012, *VN 2012/47.14*

Tribunal Administratif Cergy-Pontoise 2nd Chamber, case no. 1102790 of 3 October 2012

The Commissioners for Her Majesty's Revenue & Customs v FCE Bank plc, [2012] EWCA Civ 1290, 17 October 2012

Gerechtsof Amsterdam, cases 11/00180, 11/00587 and 11/00824m of 17 January 2013

Tribunal Supremo, Appeal no. 8720/1998, of 12 February 2003

Commissioners for Her Majesty's Revenue and Customs (Respondent) v Marks and Spencer plc, 22 May 2013, (2013) UKSC 30

KHO 2013:169 of 25 October 2013

Bundesfinanzhof, case I R 48/11 of 5 February 2014

UK Supreme Court *Commissioners for Her Majesty's Revenue and Customs v Marks and Spencer PLC,* 19 February 2014 [2014] UKSC 11

Conseil d'Etat (French Supreme Administrative Court) decision of 15 April 2015

Council Directives

Council Directive 90/434/EC of 23 July 1990 on the common system of taxation applicable to mergers, divisions, transfers of assets and exchanges of shares concerning companies of different Member States, OJ L 225, 20 August 1990

Council Directive 90/435/EC of 23 July 1990, OJ L 225, 20 August. The scope of this Directive was extended in 2003 and a recast version was finally adopted on 30 November 2011. See Council Directive 2011/96/EU of 30 November 2011 on the common system of taxation applicable in the case of parent companies and subsidiaries of different Member States, OJ L 345, 29 December.

Council Directive 2003/49/EC of 3 June 2003, on a Common system of Taxation Applicable to Interest and Royalty Payments made between associated companies of different Member States, OJ L157, 26 June 2003.

Council Directive 2010/24/EU of 16 March 2010 *concerning mutual assistance for the recovery of claims relating to taxes, duties and other measures*.

Council Directive 2011/16/EU of 15 February 2011 on administrative cooperation in the field of taxation (repealing Directive 77/799/EEC).

Commission documents

Communication from the Commission to the European Parliament and the Council: *A Fair and Efficient Corporate Tax System in the European Union: 5 Key Areas for Action*, COM (2015) 302 final, 17 June 2015

European Commission *Proposal on a Common Consolidated Corporate Tax Base no. 15756/14*

European Commission IP/12/283, of 22 March 2012

European Commission *Proposal for a Council Directive on a Common Consolidated Corporate Tax Base (CCCTB)*, COM (2011) 121/4

Communication from the Commission to the Council, The European Parliament and the European Economic and Social Committee, "Tax Treatment of Losses in Cross-Border Situations", COM(2006) 824 final, 19 December 2006

EU Commission "Common Consolidated Corporate Tax Base Working Group (CCCTB WG) – Issues related to group taxation" *Working Document CCCTB\WP\035\doc\en*, 5 May 2006

Commission of the European Communities *Staff Working Paper Company Taxation for the Internal Market*, COM(2001) 582 final, 23 October 2001

Commission of the European Communities, *Proposal for a Council Directive concerning arrangements for the taking into account by enterprises of the losses of their permanent establishments and subsidiaries situated in other Member States*, COM(90) final, 24 January 1991

Commission of the European Communities *Proposal for a Council Directive on the harmonization of the laws of the Member States relating to tax arrangements for the carry-over of losses of undertakings*, CIN(84) 404 final of 11 September 1984, later amended by *Amendments to the Proposal for a Council Directive on the harmonization of the laws of the Member States relating to tax arrangements for the carry-over of losses of undertakings*, (COM985) 319 final

European Parliament documents

European Parliament resolution on, "Tax Treatment of Cross-Border Situations", (2009/C 41 E/02) of 15 January 2008